Environmental Protection
Emily Lloyd
Commissioner

THE CITY OF NEW YORK
DEPARTMENT OF ENVIRONMENTAL PROTECTION
Bureau of Environmental Compliance
59-17 Junction Boulevard, 9th Floor
Flushing, New York 11373

Michael Gilsenan
Assistant Commissioner
Environmental Compliance

INSTRUCTIONS
Required Information for Equipment Acceptance

For the Use of Non-Department Listed Burners

Instructions

1. Submit a description of the oil flow system for each burner type with the relevant oil schematics. The oil schematics must show pressure gages (with stop cocks) and all other components of the system.
2. Complete the form and tables.
3. Attach a certified test report following the procedure below.
4. Explain how the oil delivery rate will be fixed to yield a specific firing rate for each burner. List the data in tabular form for each firing rate. Explain the method by which the burner oil delivery rate is permanently set to prevent changes in the firing rate.
5. Explain how the methods of limitation will be verified in the field during inspection.
6. Verify that pre-purge and post-purge periods are provided, as required by the Part III, Section 6.6 of the "Engineering Criteria for Fuel Oil Burning Equipment".
7. An application for acceptance is not required for equipment that fires gas only or when the gross output firing rate is less than 2.8 million Btu/hr.

Burner Test Information

1. UL test data from a selection of sizes fully representing the given burner models are to be submitted. The tests shall indicate that the burners are capable of operating with a smoke shade not exceeding #2 on the Bacharach Scale.
2. Each burner shall be fired at both the maximum and minimum designed rate of the specific model tested. The test report shall include data for the low fire rate corresponding to each high fire rate. The tests are to be conducted using the heaviest grade of fuel for which acceptance is being requested.
3. For burners seeking acceptance as low NO_X burners, the tests must be run with the low NO_X components both engaged and disengaged for verification of the NO_X level reduction. Historically, the Department has sought a minimum NO_X level reduction in the range of 25-30 ppm for the purposes of obtaining acceptance as a low NO_X burner. This range may be subject to upward revision as additional data and advances in the technology become available.

Fees

1. The fees shown below for equipment acceptance are required in accordance with LL58-91.
2. For each application for acceptance of fuel oil burning equipment, rated at 2.8 million Btu/hr or greater, the fee is $600.
3. For each application for amendment of prior accepted equipment, the fee is $300.

Explanation of the type of combustion controller used for each burner size or grouping along with the relevant oil schematic for each burner size or grouping.

For example: in a burner model series of 9 burner sizes:

Combustion Controller: On/Off Operation (Oil Schematic #111)

This mode of operation applies to burner sizes 1 to 3. Simplex type nozzles are utilized. A brief description of the burner cycle from start to finish should follow in easy to understand language.

Combustion Controller: Low-High-Low-Off Operation (Oil Schematic #222)

This mode of operation applies to burner sizes 4 to 6. Simplex type or bypass type nozzles are utilized. A brief description of the burner cycle from start to finish should follow in easy to understand language.

Combustion Controller: Full Modulation (Oil Schematic #333)

This mode of operation applies to burner sizes 6 to 9. Bypass type nozzles are utilized. A brief description of the burner cycle from start to finish should follow in easy to understand language.

THIS DRAWING IS THE PROPERTY OF INDUSTRIAL COMBUSTION, LLC

ITEM	QTY.	PART NO.	DESCRIPTION
1	1	SEE CHART	PUMP, OIL
2	10	657-00128	NIPPLE, 1/4" x 1-1/4" LG. PIPE
3	2	659-00078	ELBOW, 1/4" x 90° PIPE
4	1	657-00130	NIPPLE, 1/4" X 4-1/2" LG. PIPE
5	1	656-00260	CROSS, 1/4" PIPE
6	2	647-00417	BUSHING, 3/8" x 1/4" REDUCER
7	1	SEE CHART	VALVE, OIL, 3/8" NPT HAUCK
8	1	657-00146	NIPPLE, 3/8" x 3-1/2" LG. PIPE
9	1	658-00213	UNION, 3/8" PIPE
10	1	659-00079	ELBOW, 3/8" x 90° PIPE
11	1	640-01362	VALVE, OIL, 1/4"
12	2	659-00022	TEE, 1/4" x 1/4" x 1/4" PIPE
13	2	341-00587	VALVE, NEEDLE, 1/4" FPT
14	2	630-00353	GAUGE, PRESSURE, 0-600 PSI
15	2	646-00009	F.F., 1/4" ODC. x 1/4" NPT. x 90°
16	4	645-00008	FLARED NUT, 1/4"
17	1	657-00121	NIPPLE, 1/8" x 3" LG. PIPE
18	1	647-00416	BUSHING, 1/4" x 1/8" REDUCER
19	1	658-00214	UNION, 1/4" PIPE
20	1	657-00130	NIPPLE, 1/4" x 2" LG. PIPE

ITEM	QTY.	PART NO.	DESCRIPTION
21	1	640-01348	VALVE, OIL PRESSURE REGULATING, RV210Z-4
22	2	640-00664	VALVE, OIL, 1/4"
23	2	646-00007	F.F., 1/4" ODC. x 1/4" NPT. x STR.

PUMP SELECTION CHART

BURNER MODEL	BUNTEC PUMP P/N	WEBSTER PUMP P/N
SIZE 35-48	888-00120	801-00482
SIZE 50-63	889-00190	801-00437
SIZE 70		801-00437
SIZE 80-90		801-00485
SIZE 100-128		801-00522

HAUCK VALVE SELECTION CHART

BURNER MODEL	VALVE PART NO
SIZE 38-40	640-01350
SIZE 43-50	640-01351
SIZE 64-124	640-01436

NOTES:
1 - TUBING CONFIGURATION SHOWN AS REFERENCE ONLY.
2 - ACTUAL TUBING MAY VARY FROM THAT DEPICTED HEREIN.

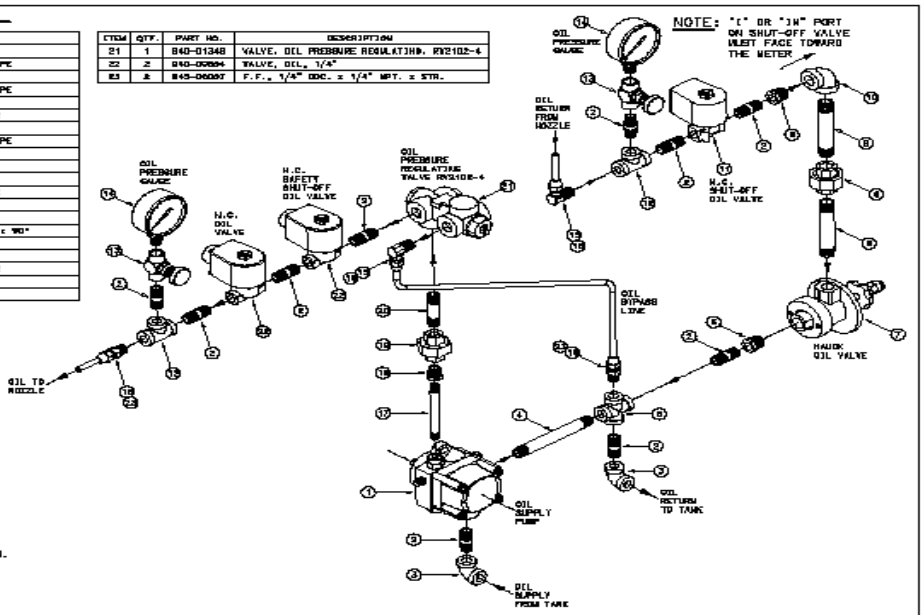

INDUSTRIAL COMBUSTION, LLC
AGENCY-APPROVAL-DIAGRAM
OIL-FLOW-DIAGRAM, BCA APPROVAL
V-SERIES, SIZE-36 THRU 128
FULL MODULATION (RETURN FLOW)
DRWG. NO. 658-00064 B

THIS DRAWING IS THE PROPERTY OF INDUSTRIAL COMBUSTION, LLC

ITEM	QTY.	PART NO.	DESCRIPTION
1	1	SEE CHART	PUMP, OIL
2	8	657-00128	NIPPLE, 1/4" x 1-1/4" LG. PIPE
3	1	659-00078	ELBOW, 1/4" x 90° PIPE
4	3	659-00022	TEE, 1/4" x 1/4" x 1/4" PIPE
5	1	647-00417	BUSHING, 3/8" X 1/4" REDUCER
6	1	SEE CHART	VALVE, OIL, 3/8" NPT HAUCK
7	1	645-00048	F.F., 3/8" ODC. x 3/8" NPT. x STR.
8	1	646-00177	F.F., 3/8" ODC. X 1/4" NPT. x STR.
9	1	640-01348	VALVE, OIL PRESSURE REGULATING, RV210Z-4
10	1	657-00183	NIPPLE, 1/8" x 4" LG. PIPE
11	1	647-00416	BUSHING, 1/4" X 1/8" REDUCER
12	1	658-00214	UNION, 1/4" PIPE
13	1	657-00130	NIPPLE, 1/4" x 2" LG. PIPE
14	1	645-00008	F.F., 1/4" ODC. x 1/4" NPT. x 90°
15	2	640-00664	VALVE, OIL, 1/4"
16	1	341-00587	VALVE, NEEDLE, 1/4" FPT
17	1	630-00353	GAUGE, PRESSURE, 0-600 PSI
18	2	646-00007	F.F., 1/4" ODC. X 1/4" NPT. x STR.
19	3	645-00008	FLARED NUT, 1/4"
20	2	645-00043	FLARED NUT, 3/8"

PUMP SELECTION CHART

BURNER MODEL	BUNTEC PUMP P/N	WEBSTER PUMP P/N
SIZE 13-20	801-00483	801-00436
SIZE 24-68	888-00120	801-00482

HAUCK VALVE SELECTION CHART

BURNER MODEL	VALVE PART NO
SIZE 13-33	640-01349
SIZE 38-40	640-01350
SIZE 48-33	640-01351

NOTES:
1 - TUBING CONFIGURATION SHOWN AS REFERENCE ONLY.
ACTUAL TUBING MAY VARY FROM THAT DEPICTED HEREIN.

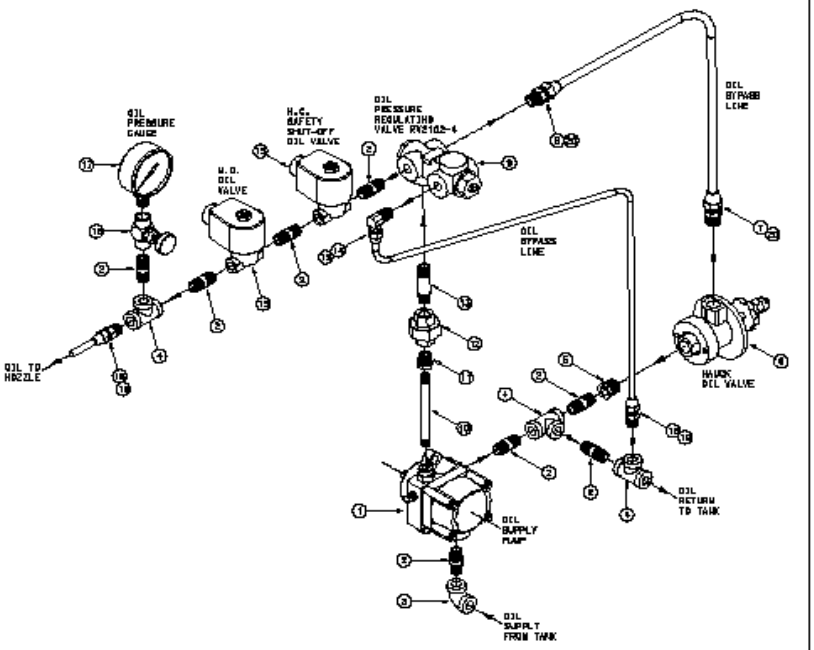

INDUSTRIAL COMBUSTION, LLC
AGENCY-APPROVAL-DIAGRAM
OIL-FLOW-DIAGRAM, BCA APPROVAL
V-SERIES, SIZE-13 THRU 66
FULL MODULATION (DUPLEX)
DRWG. NO. 658-00065 B

THIS DRAWING IS THE PROPERTY OF INDUSTRIAL COMBUSTION, LLC

ITEM	QTY.	PART NO.	DESCRIPTION
1	1	SEE CHART	PUMP, OIL
2	6	857-00128	NIPPLE, 1/4" x 1-1/4" LG. PIPE
3	2	859-00078	ELBOW, 1/4" x 90° PIPE
4	3	859-00022	TEE, 1/4" x 1/4" x 1/4" PIPE
5	4	845-00007	F.F., 1/4" ODC. x 1/4" MPT. x STR.
6	1	857-00134	NIPPLE, 1/4" x 4" LG. PIPE
7	1	940-01214	VALVE, OIL, 1/4"
8	2	847-00417	BUSHING, 3/8" x 1/4" REDUCER
9	1	940-01384	VALVE, OIL PRESSURE REGULATING, RV2102
10	2	857-00033	NIPPLE, 1/4" x CLOSED PIPE
11	1	858-00214	UNION, 1/4" PIPE
12	1	940-01346	VALVE, OIL PRESSURE REGULATING, RV2102-4
13	1	857-00123	NIPPLE, 1/8" x 4" LG. PIPE
14	1	847-00416	BUSHING, 3/8" x 1/8" REDUCER
15	1	858-00215	UNION, 3/8" PIPE
16	1	857-00142	NIPPLE, 3/8" x 2" LG. PIPE
17	1	845-00008	F.F., 1/4" ODC. x 1/4" MPT. x 90°

ITEM	QTY.	PART NO.	DESCRIPTION
18	2	940-00854	VALVE, OIL, 1/4"
19	1	941-00587	VALVE, NEEDLE, 1/4" FPT
20	1	850-00353	GAUGE, PRESSURE, 0-800 PSI
21	5	845-00008	FLARED NUT, 1/4"

PUMP SELECTION CHART - LOW/HIGH/OFF		
BURNER MODEL	SUNTEC PUMP P/N	WEBSTER PUMP P/N
SIZE 34-40	895-00120	901-00462

PUMP SELECTION CHART - LOW/HIGH/LOW		
BURNER MODEL	SUNTEC PUMP P/N	WEBSTER PUMP P/N
SIZE 34-45	885-00120	901-00482
SIZE 50-55	895-00120	901-00437

NOTES:
1 - TUBING CONFIGURATION SHOWN AS REFERENCE ONLY.
ACTUAL TUBING WAY VARY FROM THAT DEPICTED HEREIN.

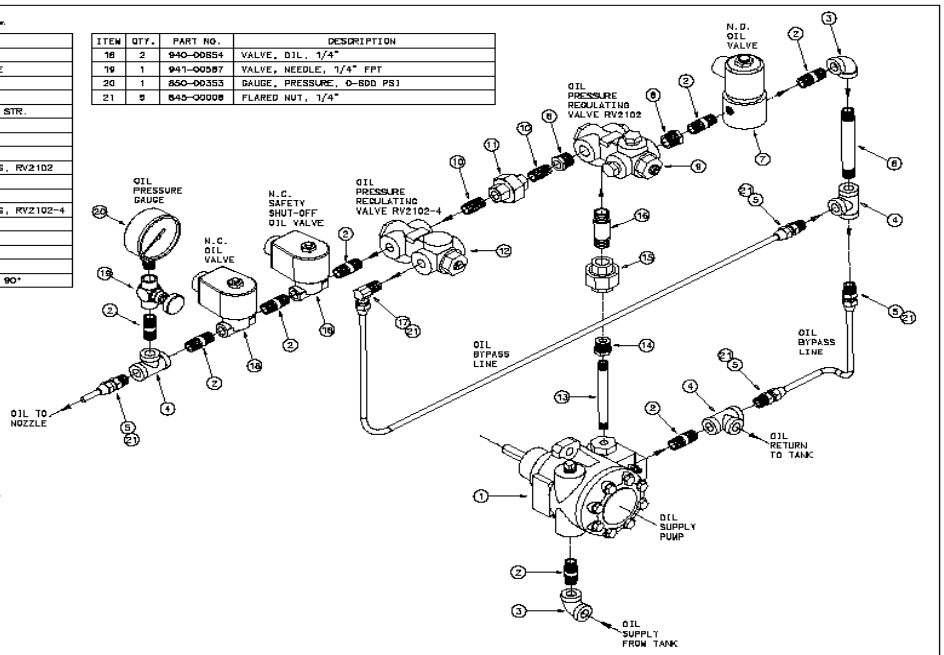

AGENCY-APPROVAL-DOCUMENT
OIL-FLOW-DIAGRAM, WEA APPROVAL
V-SERIES, SIZE-34-40 LOW/HIGH/OFF
SIZE-34-55 LOW/HIGH/LOW

INDUSTRIAL COMBUSTION, LLC
DRWG. NO. 65B-00066 B

THIS DRAWING IS THE PROPERTY OF INDUSTRIAL COMBUSTION, LLC

ITEM	REQD.	PART NO.	DESCRIPTION
1	1	SEE CHART	PUMP, OIL
2	6	857-00128	NIPPLE, 1/4" x 1-1/4" LG. PIPE
3	1	859-00078	ELBOW, 1/4" x 90° PIPE
4	2	859-00022	TEE, 1/4" x 1/4" x 1/4" PIPE
5	2	845-00008	F.F., 1/4" ODC. x 1/4" MPT. x 90°
6	1	857-00123	NIPPLE, 1/8" x 4" LG. PIPE
7	1	847-00415	BUSHING, 1/4" x 1/8" REDUCER
8	1	858-00214	UNION, 1/4" PIPE
9	1	857-00130	NIPPLE, 1/4" x 2" LG. PIPE
10	1	940-01346	VALVE, OIL PRESSURE REGULATING, RV2102-4
11	2	940-00854	VALVE, OIL, 1/4"
12	1	941-00587	VALVE, NEEDLE, 1/4" FPT
13	1	850-00353	GAUGE PRESSURE, 0-800 PSI
14	1	845-00007	F.F., 1/4" ODC. x 1/4" MPT. x STR.
15	3	845-00008	FLARED NUT, 1/4"

PUMP SELECTION CHART - ON/OFF		
BURNER MODEL	SUNTEC PUMP P/N	WEBSTER PUMP P/N
SIZE 13	901-00523	901-00436

PUMP SELECTION CHART - L/H/O. L/H/L	
BURNER MODEL	SUNTEC PUMP P/N
SIZE 13-30	801-00520

NOTES:
1) TUBING CONFIGURATION SHOWN AS REFERENCE ONLY.
2) ACTUAL TUBING CONFIGURATION WAY VARY.

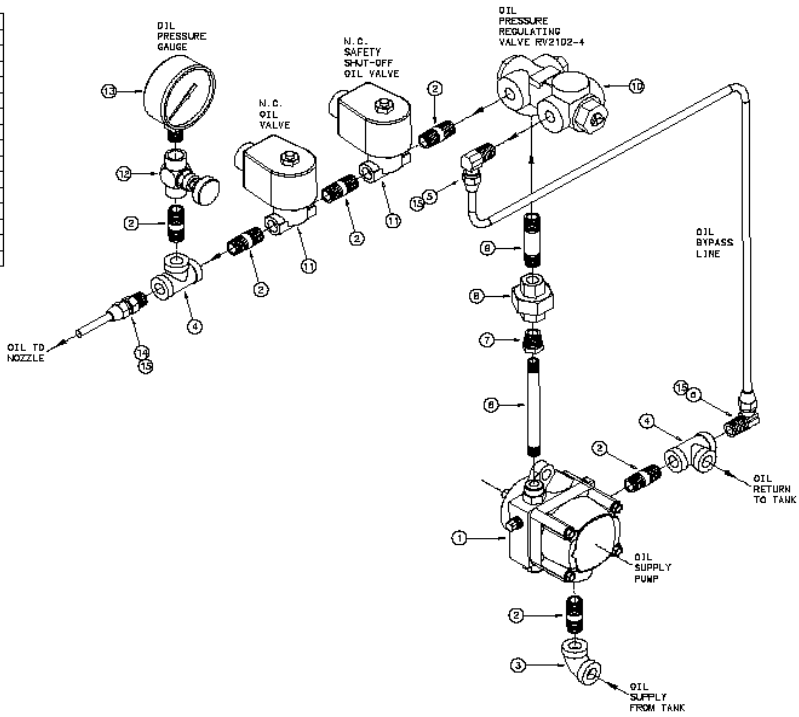

AGENCY-APPROVAL-DOCUMENT
OIL-FLOW-DIAGRAM, WEA APPROVAL
V-SERIES SIZE-13 ON/OFF
SIZE-13-30 LOW/HIGH/OFF LOW/HIGH/LOW

INDUSTRIAL COMBUSTION, LLC
DRWG. NO. 65B-00067 B

THIS DRAWING IS THE PROPERTY OF INDUSTRIAL COMBUSTION, DIV. OF AQUA-CHEM, INC.
IT IS SUBJECT TO CHANGE WITHOUT NOTICE, AND IS NOT TO BE COPIED OR USED IN ANY WAY DETRIMENTAL TO THE COMPANY.

TOLERANCE
UNLESS OTHERWISE SPECIFIED:

DECIMAL	ANGULAR	FRACTIONAL
.x ±.015"	±1°	±1/32"
.xx ±.010"		
.xxx ±.005"		

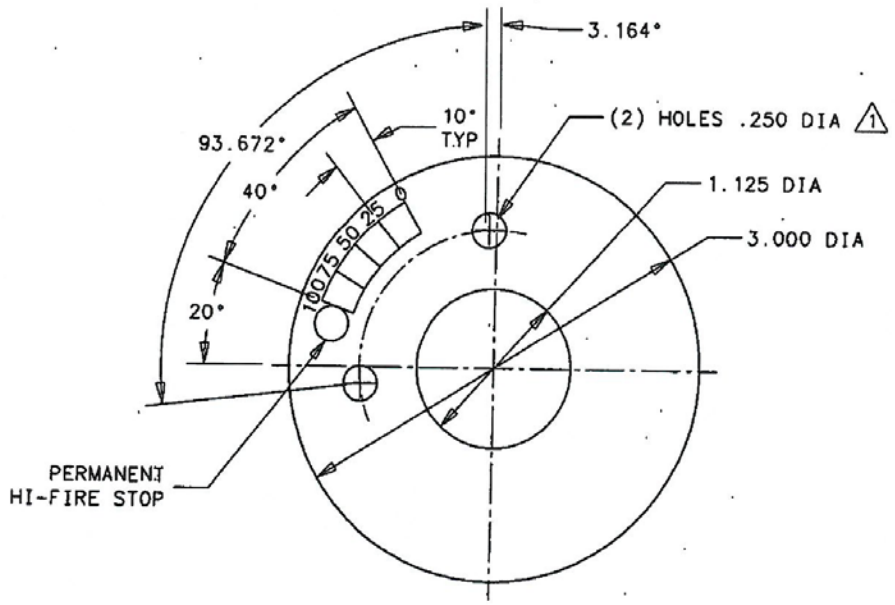

NOTE:

1 MOUNTING HOLES

WARNING: THESE DRAWINGS ARE TO BE USED ONLY IN CONNECTION WITH EQUIPMENT COMPLYING IN ALL RESPECTS WITH THE ORIGINAL MANUFACTURER'S SPECIFICATIONS. INSTALLER SHOULD INSPECT EQUIPMENT AND ASCERTAIN COMPLIANCE WITH ORIGINAL MANUFACTURER'S SPECIFICATIONS BEFORE USING THESE DRAWINGS. DO NOT USE THESE DRAWINGS IF THE EQUIPMENT HAS BEEN MODIFIED. SUCH USE MAY CAUSE EQUIPMENT FAILURE OR MALFUNCTION WHICH MAY RESULT IN ELECTRICAL SHOCK OR BURNS OR OTHER SEVERE PERSONAL INJURY AND PROPERTY DAMAGE. INDUSTRIAL COMBUSTION DISCLAIMS ANY AND ALL LIABILITY FOR ANY INJURY OR DAMAGE, WHETHER DIRECT, INDIRECT, INCIDENTAL OR CONSEQUENTIAL, RESULTING FROM USE OF THESE DRAWINGS IN CONNECTION WITH EQUIPMENT WHICH DOES NOT COMPLY IN ALL RESPECTS WITH THE MANUFACTURER'S ORIGINAL SPECIFICATIONS.

SQ.IN. 5.977 | BULK NO. 972-00002 | MAT'L. 1/4" M.S. PLATE

REVISIONS

SCALE 1"=1"	CHECKED BY A.D.P.	INDUSTRIAL COMBUSTION MONROE, WI DIVISION OF AQUA-CHEM, INC.
LAST MODIFIED 08/27/04	RELEASED BY EN. 0000	GAUGE LABEL, HAUCK VALVE, BAR APPLICATIONS (TYPICAL)
DRAWN BY B.W.M.	DATE DRAWN 08/27/04	A DRWG. NO. EX-06665 00