VISIBLE WINDOWS – NORTH AND ENTRANCE COURTYARD VIEW

VISIBLE WINDOWS – NORTH PARTIAL VIEW

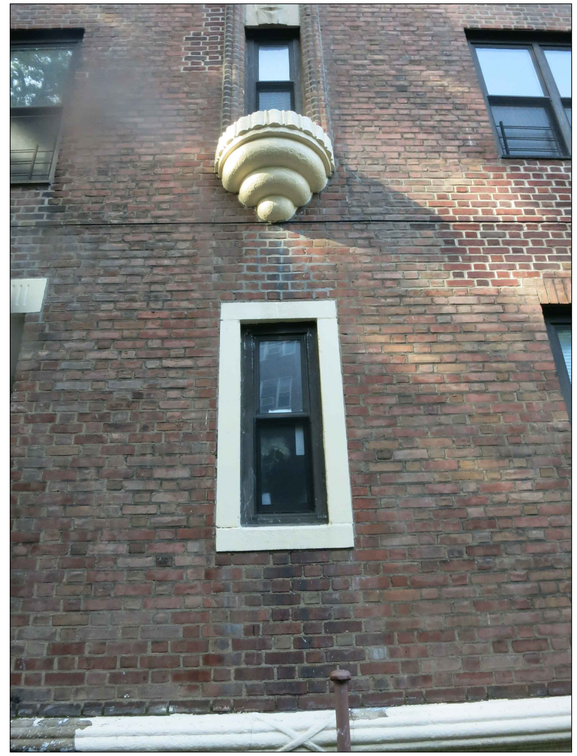

VISIBLE WINDOWS – NORTH PARTIAL VIEW

VISIBLE WINDOWS – NORTH COURTYARD

VISIBLE WINDOWS – NORTH COURTYARD

VISIBLE WINDOWS – PARTIAL NORTH AND WEST VIEW

VISIBLE WINDOWS – NORTH COURTYARD

AMR ENGINEERING CONSULTING P.C. "WE PRESERVE MEMORIES"

WINDOW REPLACEMENT
230 PARK PLACE
BROOKLYN, NEW YORK

VISIBLE WINDOWS

DATE: 1.7.2015
DRAWN BY: EM
CHECKED BY: A.H.
SHEET NO. L-001

WINDOW REPLACEMENT
230 PARK PLACE
BROOKLYN, NEW YORK

DATE:	1.7.2015
DRAWN BY:	EM
CHECKED BY:	A.H.
SHEET NO.	L-002

HISTORIC ELEVATIONS

WINDOW REPLACEMENT
230 PARK PLACE
BROOKLYN, NEW YORK

HISTORIC ELEVATIONS

DATE: 1.7.2015
DRAWN BY: EM
CHECKED BY: A.H.
SHEET NO. L-003

1 NORTH ELEVATION
SCALE: 1/8"=1'-0"

1ST FLOOR – LOBBY

2 NORTH ELEVATION
SCALE: 1/8"=1'-0"

3 NORTH ELEVATION
SCALE: 1/8"=1'-0"

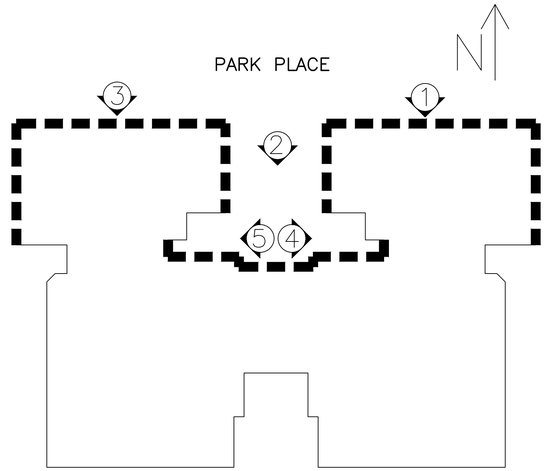

VISIBLE WINDOWS

NON–VISIBLE WINDOWS

KEY DIAGRAM
NOT TO SCALE

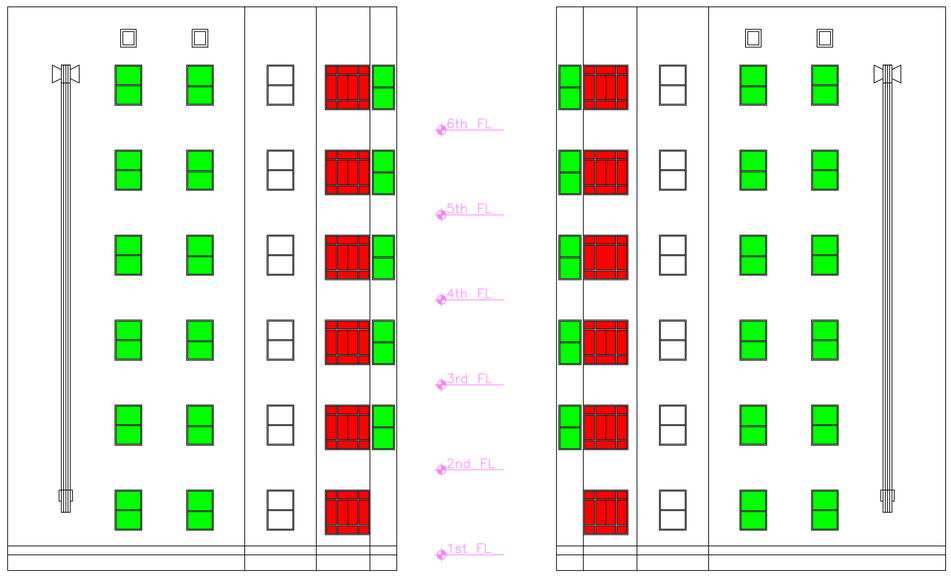

STAIRWELL

4 COURTYARD – WEST
SCALE: 1/8"=1'-0"

STAIRWELL

5 COURTYARD – EAST
SCALE: 1/8"=1'-0"

LEGEND

EXISTING VISIBLE WINDOWS TO BE REPLACED WITH NEW ALUMINUM DOUBLE HUNG WINDOWS. EXISTING NARROW BATHROOM WINDOWS TO BE REPLACED WITH NEW ALUMINUM CASEMENT WINDOWS

EXISTING VISIBLE STEEL WINDOWS TO REMAIN AND BE RE–FURBISHED

EXISTING NON–VISIBLE WINDOWS TO BE REPLACED UNDER STAFF LEVEL PERMIT

AMR
ENGINEERING CONSULTANT, P.C.
THE PROVEN ACHIEVERS

WINDOW REPLACEMENT
230 PARK PLACE
BROOKLYN, NEW YORK

VISIBLE WINDOWS

DATE:	1.7.2015
DRAWN BY:	EM
CHECKED BY:	A.H.
SHEET NO.	L-004

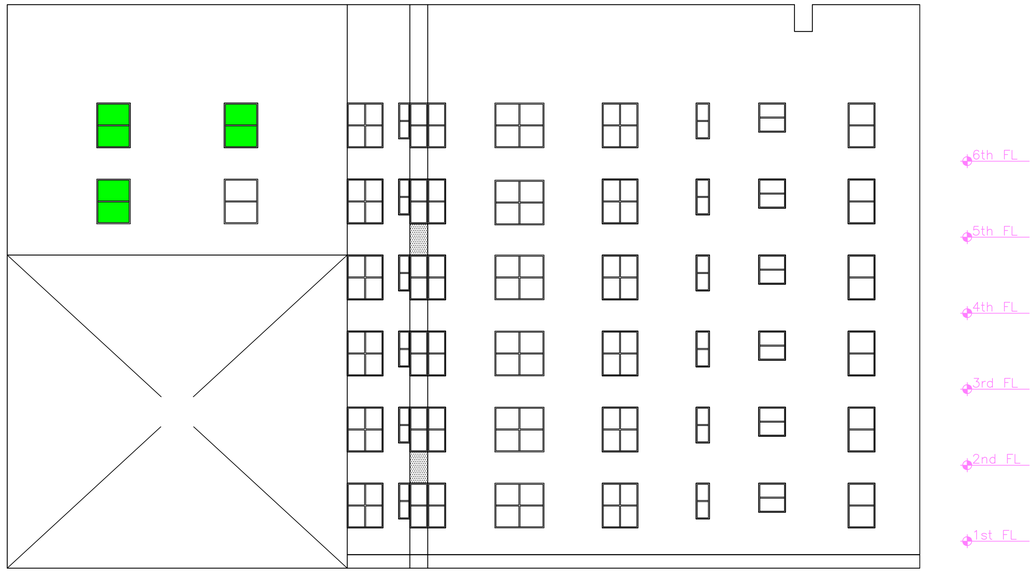

4 WEST ELEVATION
SCALE: 1/8"=1'-0"

PARK PLACE

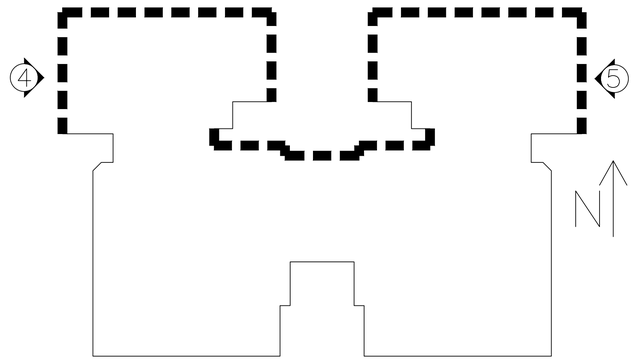

VISIBLE WINDOWS

NON-VISIBLE WINDOWS

KEY DIAGRAM
NOT TO SCALE

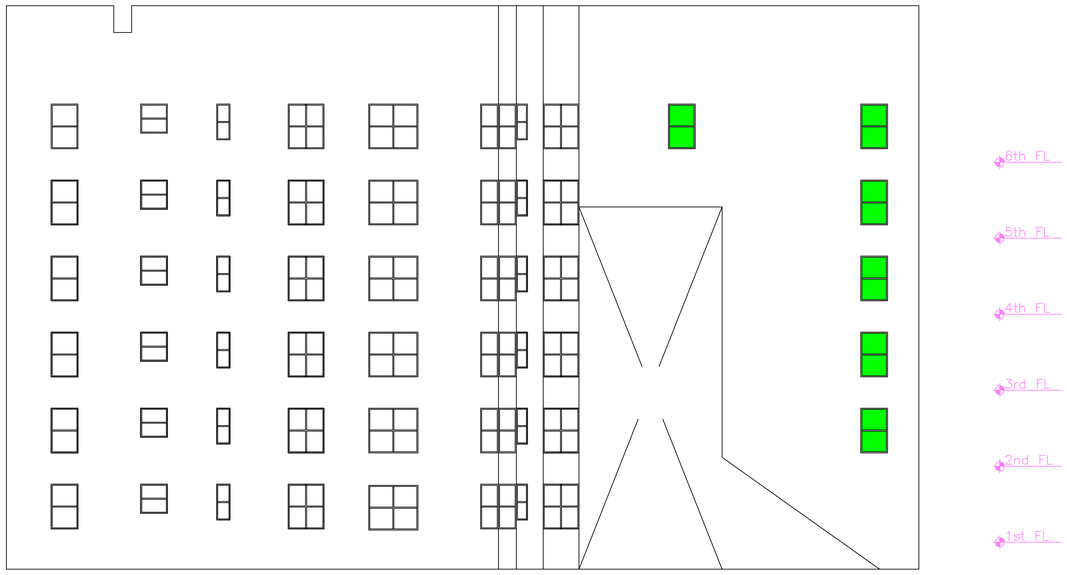

5 EAST ELEVATION
SCALE: 1/8"=1'-0"

LEGEND

VISIBLE WINDOWS TO BE REPLACED WITH ALUMINUM DOUBLE HUNG WINDOWS

EXISTING NON-VISIBLE WINDOWS TO BE REPLACED UNDER STAFF LEVEL PERMIT

AMR	WINDOW REPLACEMENT 230 PARK PLACE BROOKLYN, NEW YORK	DATE: 1.7.2015 DRAWN BY: EM CHECKED BY: A.H.
	VISIBLE WINDOWS	SHEET NO. L-005

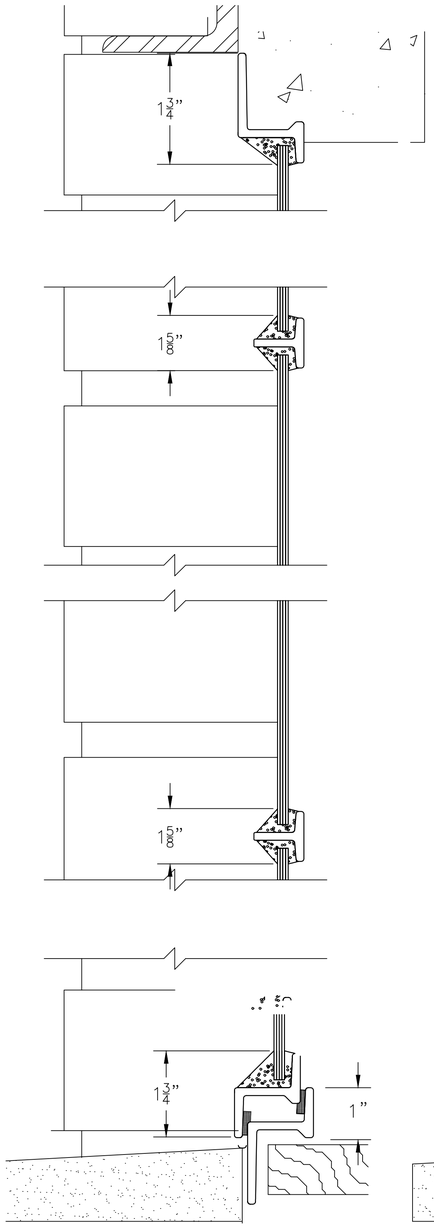

EXISTING STEEL WINDOWS TO REMAIN
AND BE RE-FURBISHED
NOT TO SCALE
SEE RED TAG ON PAGE L-004

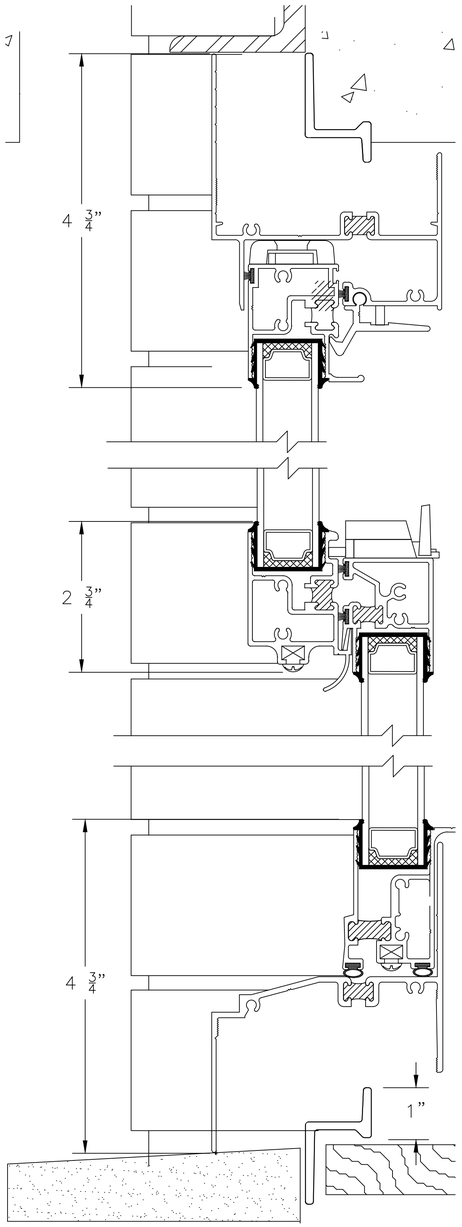

2 EXISTING ALUMINUM WINDOWS
NOT TO SCALE

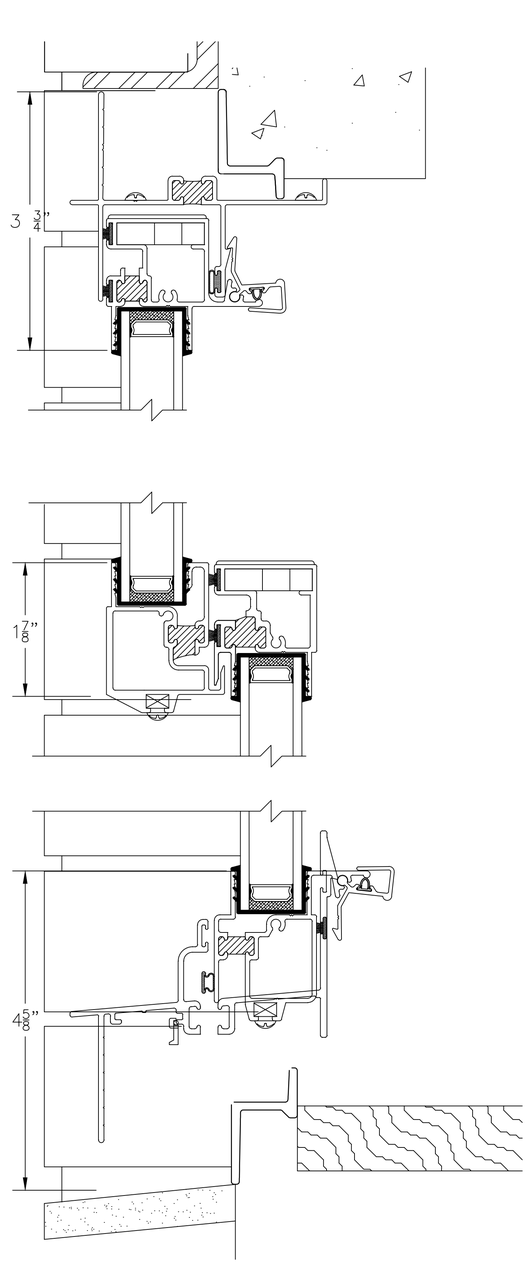

3 2013 PROPOSED NEW ALUMINUM WINDOWS
NOT TO SCALE

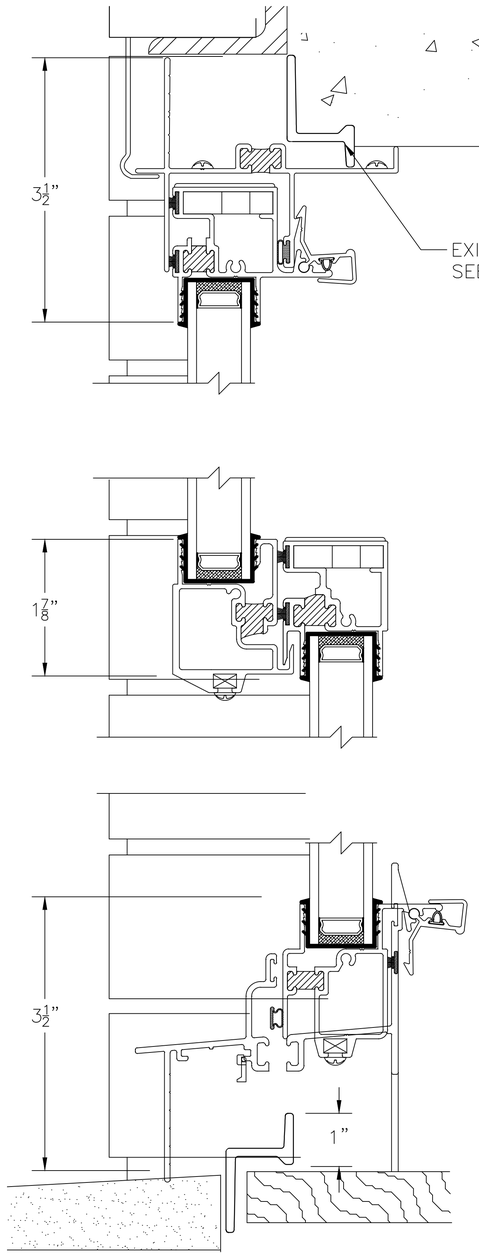

4 2014 PROPOSED NEW ALUMINUM WINDOWS
NOT TO SCALE

All WINDOW FRAMES WILL BE BLAC

WINDOW REPLACEMENT
230 PARK PLACE
BROOKLYN, NEW YORK

VISIBLE WINDOWS

DATE: 6
DRAWN BY: E
CHECKED BY: A
SHEET NO. L-0

1 EXISTING STEEL WINDOWS TO REMAIN AND BE RE-FURBISHED
NOT TO SCALE

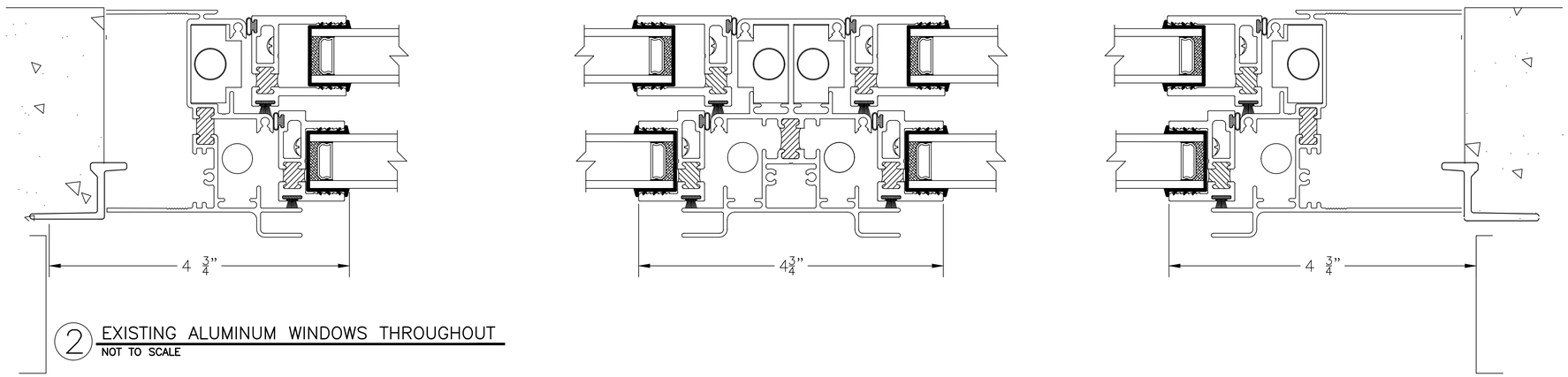

2 EXISTING ALUMINUM WINDOWS THROUGHOUT
NOT TO SCALE

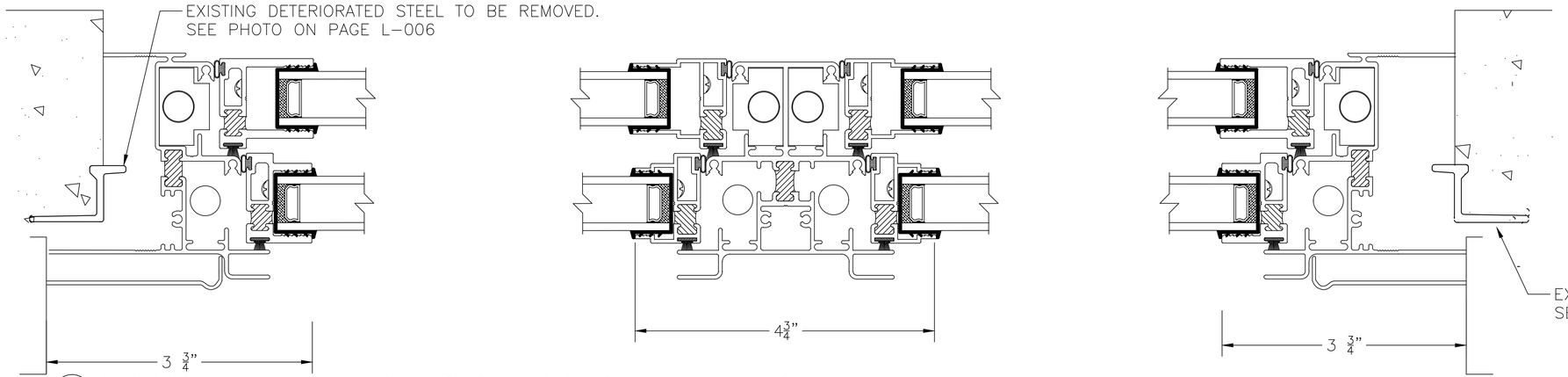

3 PROPOSED NEW ALUMINUM WINDOWS TO REPLACE EXISTING ALUMINUM WINDOWS
NOT TO SCALE

All WINDOW FRAMES WILL BE BLACK

AMR	WINDOW REPLACEMENT 230 PARK PLACE BROOKLYN, NEW YORK	DATE: 6.25.2015 DRAWN BY: EM CHECKED BY: A.H.
	VISIBLE WINDOWS	SHEET NO. L-007

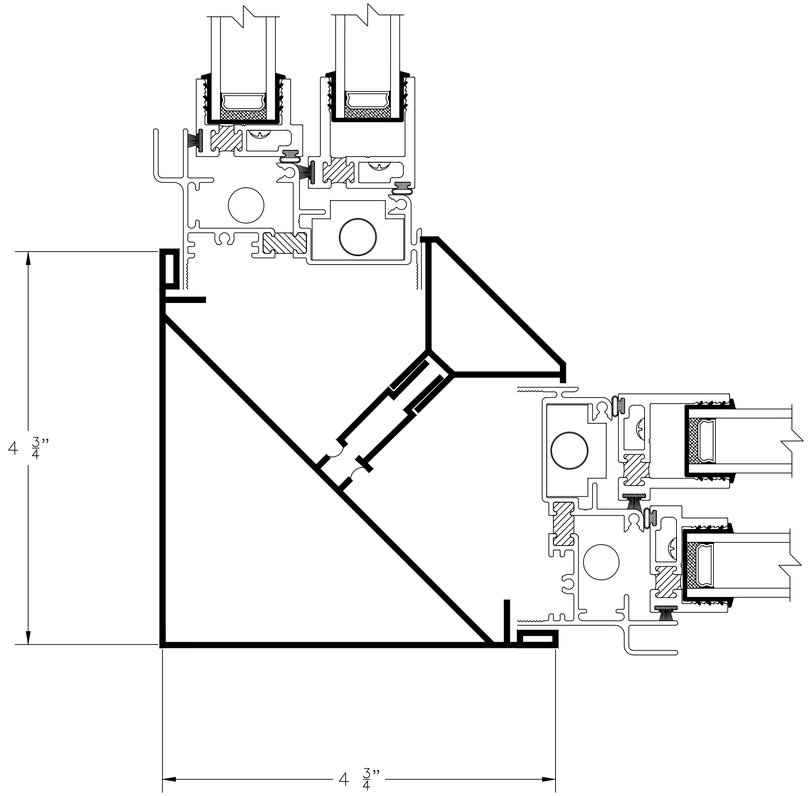

DETAIL AT CORNER FOR EXISTING ALUMINUM WINDOWS
NOT TO SCALE

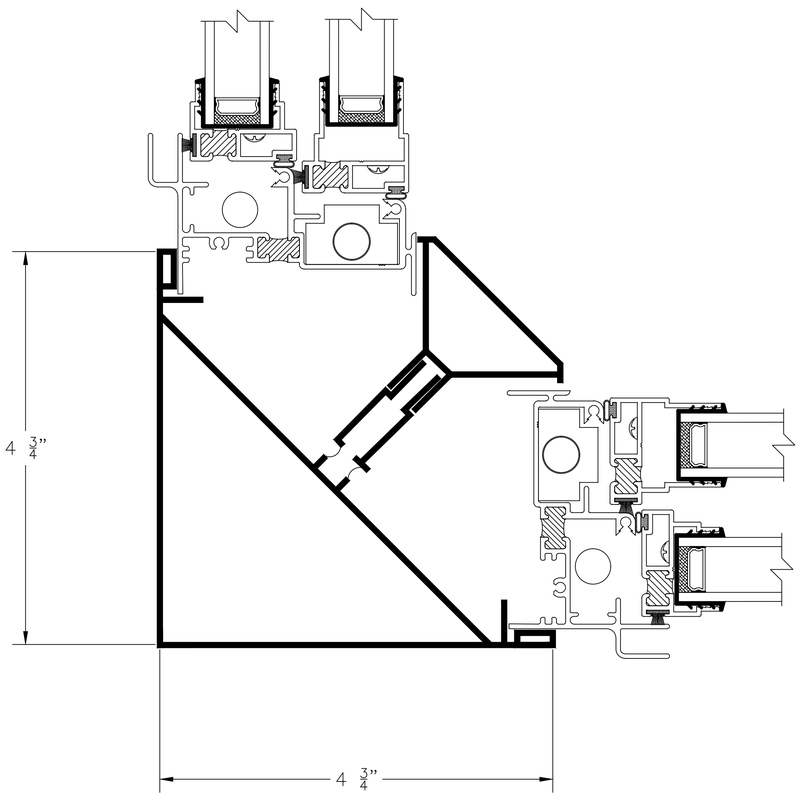

DETAIL AT CORNER FOR PROPOSED ALUMINUM WINDOWS
NOT TO SCALE

All WINDOW FRAMES WILL BE BLACK

AMR ENGINEERING CONSULTING P.C.
"WE PRESERVE MEMORIES"

WINDOW REPLACEMENT
230 PARK PLACE
BROOKLYN, NEW YORK

VISIBLE WINDOWS

DATE: 1.7.2015
DRAWN BY: EM
CHECKED BY: A.H.
SHEET NO. L-008

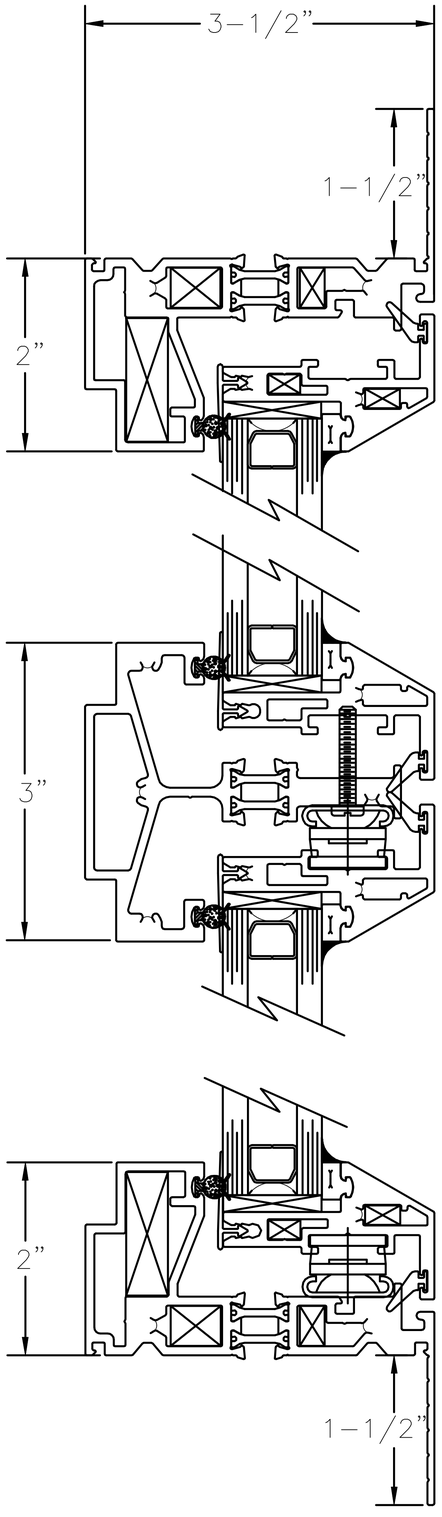

PROPOSED BATHROOM WINDOW

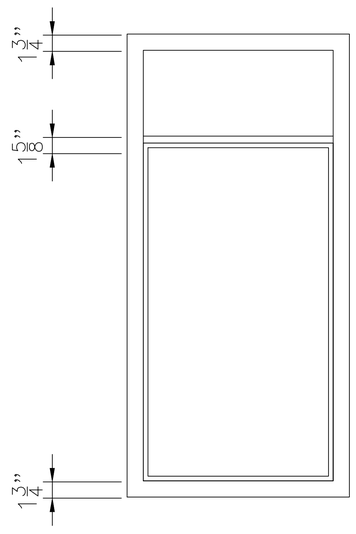

HISTORIC BATHROOM WINDOW (STEEL)
NOT TO SCALE

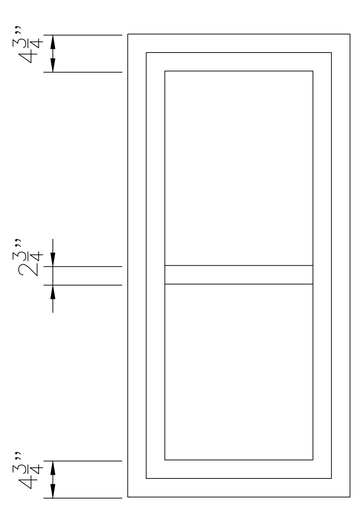

EXISTING BATHROOM WINDOW (ALUMINUM)
NOT TO SCALE

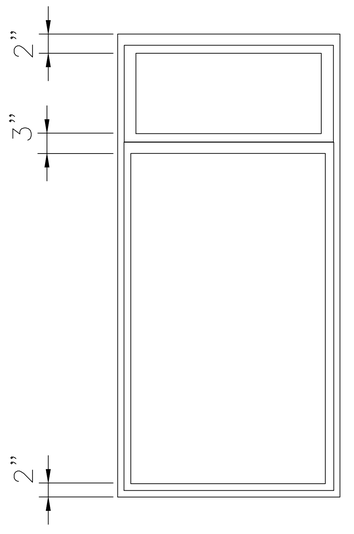

PROPOSED BATHROOM WINDOW (ALUMINUM)
NOT TO SCALE

AMR ENGINEERING CONSULTING P.C. “WE PRESERVE HISTORY”

WINDOW REPLACEMENT
230 PARK PLACE
BROOKLYN, NEW YORK

BATHROOM WINDOWS.

DATE:	1.7.2015
DRAWN BY:	EM
CHECKED BY:	A.H.
SHEET NO.	L-09