221 – 227 EAST 138th STREET

BRONX, NEW YORK

Remedial Action Work Plan

NYC VCP Project Number 16CVCP011X
OER Project Number 16EHAZ014X

Prepared For:
Tahoe Development
82-17 153rd Avenue
Howard Beach, NY 11414
(718) 641-1098

Prepared By:
Hydro Tech Environmental, Corp.
15 Ocean Avenue, 2nd Floor
Brooklyn, NY 11225
(718) 636-0800

October 2015

REMEDIAL ACTION WORK PLAN
TABLE OF CONTENTS

REMEDIAL ACTION WORK PLAN 2
TABLE OF CONTENTS 2
FIGURES 3
APPENDICES 3
LIST OF ACRONYMS 4
CERTIFICATION 6
EXECUTIVE SUMMARY 7
COMMUNITY PROTECTION STATEMENT 15
1.0 Project Background 21
1.1 Site Location and Background 21
1.2 Redevelopment Plan 21
1.3 Description of Surrounding Property 22
1.4 Summary of Past Site Uses and Areas of Concern 22
1.6 Summary of Findings of Remedial Investigation 24
2.0 Remedial Action Objectives 27
3.0 Remedial Alternatives Analysis 28
3.1 Threshold Criteria Protection of Public Health and the Environment 30
3.2 Balancing Criteria 31
4.0 Remedial Action 38
4.1 Summary of Preferred Remedial Action 38
4.2 Soil Cleanup Objectives and Soil/ Fill Management 41
4.3 Engineering Controls 44
4.4 Institutional Controls 46
4.5 Site Management Plan 47
4.6 Qualitative Human Health Exposure Assessment 48
5.0 Remedial Action Management 51
5.1 Project Organization and Oversight 51
5.2 Site Security 51
5.3 Work Hours 51
5.4 Construction Health and Safety Plan 52
5.5 Community Air Monitoring Plan 52
5.6 Agency Approvals 55
5.7 Site Preparation 55
5.8 Traffic Control 59
5.9 Demobilization 59
5.10 Reporting and Record Keeping 59
5.11 Complaint Management 60
5.12 Deviations from The Remedial Action Work Plan 61
6.0 Remedial Action Report 61
7.0 Schedule 64

FIGURES

Figure 1: Site Location Map

Figure 2: Site Boundary Map

Figure 3: Proposed Redevelopment Plan

Figure 4: Land Use Map

Figure 5: Post-Demolition Soil Probe Locations

Figure 6: Site Excavation Diagram

Figure 7: Proposed Hotspot and Confirmation Endpoint Sampling Locations

Figure 8A: Plan and Elevation of Vapor Barrier Design Plan

Figure 8B: Cross Section View Details

Figure 9: Truck Route

APPENDICES

Appendix 1: Proposed Development Plans

Appendix 2: Citizen Participation Plan

Appendix 3: Sustainability Statement

Appendix 4: Soil/Materials Management Plan

Appendix 5: Construction Health and Safety Plan

Appendix 6: Manufacturer Specifications for Vapor Barrier

Appendix 7: Letter of Proposed Development from Registered Architect

LIST OF ACRONYMS

Acronym	Definition
AOC	Area of Concern
AS/SVE	Air Sparging/Soil Vapor Extraction
BOA	Brownfield Opportunity Area
CAMP	Community Air Monitoring Plan
C&D	Construction and Demolition
CEQR	City Environmental Quality Review
CFR	Code of Federal Regulations
CHASP	Construction Health and Safety Plan
COC	Certificate of Completion
CQAP	Construction Quality Assurance Plan
CSOP	Contractors Site Operation Plan
DCR	Declaration of Covenants and Restrictions
ECs/ICs	Engineering Controls and Institutional Controls
ELAP	Environmental Laboratory Accreditation Program
HASP	Health and Safety Plan
HAZWOPER	Hazardous Waste Operations Emergency Response
IRM	Interim Remedial Measure
MNA	Monitored Natural Attenuation
NOC	Notice of Completion
NYS DEC	New York State Department of Environmental Conservation
NYC DEP	New York City Department of Environmental Protection
NYC DOHMH	New York State Department of Health and Mental Hygiene
NYC OER	New York City Office of Environmental Remediation
NYC VCP	New York City Voluntary Cleanup Program
NYCRR	New York Codes Rules and Regulations
NYS DEC	New York State Department of Environmental Conservation
NYS DEC DER	New York State Department of Environmental Conservation Division of Environmental Remediation

Acronym	Definition
NYS DOH	New York State Department of Health
NYS DOT	New York State Department of Transportation
ORC	Oxygen-Release Compound
OSHA	United States Occupational Health and Safety Administration
PCBs	Polychlorinated Biphenyls
PE	Professional Engineer
PID	Photo Ionization Detector
QEP	Qualified Environmental Professional
QHHEA	Qualitative Human Health Exposure Assessment
RAOs	Remedial Action Objectives
RAR	Remedial Action Report
RAWP	Remedial Action Work Plan or Plan
RCA	Recycled Concrete Aggregate
RD	Remedial Design
RI	Remedial Investigation
RMZ	Residual Management Zone
SCOs	Soil Cleanup Objectives
SCG	Standards, Criteria and Guidance
SMP	Site Management Plan
SPDES	State Pollutant Discharge Elimination System
SSDS	Sub-Slab Depressurization System
SVOC	Semi-Volatile Organic Compound
TAL	Target Analyte List
TCL	Target Compound List
USGS	United States Geological Survey
UST	Underground Storage Tank
VCA	Voluntary Cleanup Agreement
VOC	Volatile Organic Compound

CERTIFICATION

I, Shaik A. Saad, am currently a registered professional engineer licensed by the State of New York. I performed professional engineering services and had primary direct responsibility for designing the remedial program for the 221 – 277 East 138th Street site, site number 16CVCP011X. I certify to the following:

- I have reviewed this document and the Stipulation List, to which my signature and seal are affixed.
- Engineering Controls developed for this remedial action were designed by me or a person under my direct supervision and designed to achieve the goals established in this Remedial Action Work Plan for this site.
- The Engineering Controls to be constructed during this remedial action are accurately reflected in the text and drawings of the Remedial Action Work Plan and are of sufficient detail to enable proper construction.
- This Remedial Action Work Plan (RAWP) has a plan for handling, transport and disposal of soil, fill, fluids and other materials removed from the property in accordance with applicable City, State and Federal laws and regulations. Importation of all soil, fill and other material from off-Site will be in accordance with all applicable City, State and Federal laws and requirements. This RAWP has provisions to control nuisances during the remediation and all invasive work, including dust and odor suppression.

Shaik A. Saad
Name

071078
PE License Number

Signature

10/5/15
Date

PE Stamp

I, Mark E. Robbins, am a qualified Environmental Professional. I will have primary direct responsibility for implementation of the remedial program for the 221 – 227 East 138th Street site, site number 16CVCP011X. I certify to the following:

- This Remedial Action Work Plan (RAWP) has a plan for handling, transport and disposal of soil, fill, fluids and other materials removed from the property in accordance with applicable City, State and Federal laws and regulations. Importation of all soil, fill and other material from off-Site will be in accordance with all applicable City, State and Federal laws and requirements. This RAWP has provisions to control nuisances during the remediation and all invasive work, including dust and odor suppression.

Mark E. Robbins
QEP Name

QEP Signature

10/5/15
Date

EXECUTIVE SUMMARY

Tahoe Development is working with the NYC Office of Environmental Remediation (OER) in the New York City Voluntary Cleanup Program to investigate and remediate a 10,000-square foot site located at 221 – 227 East 138th Street in Bronx, New York. A remedial investigation (RI) was performed to compile and evaluate data and information necessary to develop this Remedial Action Work Plan (RAWP). The remedial action described in this document provides for the protection of public health and the environment consistent with the intended property use, complies with applicable environmental standards, criteria and guidance and conforms with applicable laws and regulations.

Site Location and Background

The Site is located at 221 – 227 East 138th Street in the Mott Haven section in Bronx, New York and is identified as Block 2340, Lots 56 and 58 on the New York City Tax Map. Figure 1 shows the Site location. The Site is 10,000-square feet and is bounded by East 140th Street to the north, East 138th Street to the south, Rider Avenue to the east, and Canal Place to the west. A map of the site boundary is shown in Figure 2. Currently, the Site contains a vacant one 1-story factory building that occupies the entirety of lots 56 and 58. The last use of the Subject Property was as a meat production facility.

Summary of Redevelopment Plan

The proposed future use of the Site will consist of a new 10-story mixed-use commercial and residential building with a full cellar and will be approximately 50,000 square feet in net zoning area. The proposed building will occupy the entirety of lots 56 and 58 with the exception of a 30’ x 100’ rear yard located in the northern portion of the Site. The rear yard will be used as a driveway and ramp for the parking garage in the basement and the first floor and the rear yard will be a 3 ½” thick concrete slab atop a 2 ½” thick metal deck. The cellar will occupy the entirety of lots 56 and 58 and will be used for parking, residential and maintenance storage, a compactor room and a storm water detention tank. The cellar slab will be a 3-foot 3-inch mat slab. The first floor will consist of two (2) commercial retail units encompassing approximately

3,500 square feet, a residential lobby and recreation space encompassing approximately 400 square feet. The remaining 6,100 square feet of the first floor will be occupied by car and bicycle parking, an enclosed car ramp down to the cellar, refuse storage, a gas meter room, an electrical meters and equipment room and a mechanical closet. The total excavation depth is anticipated to be 10 feet below grade surface (bgs) and 15 feet bgs in the proposed elevator pit. An estimated 3,700 cubic yards (5,500 tons) of soil will be excavated for the building's cellar. Floors 2 – 10 will contain a total of 47 residential units.

Groundwater is expected to be encountered at depths of approximately 7.3-8.3 feet below the ground surface (bgs). Therefore, the majority of the soil excavation will occur below the groundwater table and dewatering will be required.

Layout of the proposed site development is presented in Figure 3. The current zoning designation is M1-4/R7X/MX-13. The proposed use is consistent with existing zoning for the property. The referenced lots will not merge.

Summary of Surrounding Property

The vicinity of the Site consists of commercial and industrial properties. The ground surfaces in the vicinity of the Site consist of asphalt and concrete. The results of the Site inspection and an evaluation of the United States Geological Survey (USGS) 7-½ Minute Topographic Map containing the properties indicate there is one sensitive receptor present within a 0.125-mile radius of the Site. The sensitive receptor is Nacro Freedom, Inc. The Site should not impact upon the sensitive receptor.

Figure 4 shows the surrounding land usage.

Summary of Past Site Uses and Areas of Concern

Based upon the review of Sanborn Fire Rate Insurance Maps, Property Shark, the City Directory and the NYC Automated City Register Information System (ACRIS) database for the Site and its vicinity and the Phase I Environmental Site Assessment (ESA) Report prepared by Hydro Tech Environmental, Corp. during March 2015 a Site history was established. According to Sanborn Fire Rate Insurance Maps, the Site was depicted as various one- and two-story commercial buildings, including a farrier shop (1908 Map), a metal spinning factory (1908 Map), a gasoline station and auto repair shop (1935 Map), unspecified warehouse use (1944 Map) and a provisions manufacturing facility (1946 – 2007 Maps), which is the Site's most recent use.

According to the City Directory, the occupants of the Site include an electroplating company, a service station, a brass foundry, an auto body shop, an auto repair shop, and a meat packing company. The historical uses of the Site as a gasoline station, an auto repair and auto body shop and various manufacturing likely involved the use of petroleum and/or hazardous materials, potentially having had an adverse impact upon the environmental quality of the Site.

The AOCs identified for this Site include:

1. The historical use of the Subject Property as a filling station and various manufacturing purposes;
2. The historical use of the adjacent properties as a drain pipe yard, coal yard, manufacturing facility, iron foundry and scrap yard, auto junk yard, gasoline station and auto repair shop;
3. The presence of an adjacent spill #9101008;
4. The listing of an adjacent property as an Inactive Hazardous Waste Disposal Site;
5. The presence of a Potential Vapor Encroachment Condition;
6. The suspected presence of an underground storage tank;
7. The presence of suspect asbestos-containing material.

It should be noted that adjacent spill #9101008 was closed on June 24, 2015, which is after the publication date of Hydro Tech's Phase I ESA.

Summary of Work Performed under the Remedial Investigation

Hydro Tech Environmental, Corp. performed the following scope of work:

1. Conducted a Site inspection to identify AOCs and physical obstructions (i.e. structures, buildings, etc.);
2. Installed five (5) soil borings across the entire project Site, and collected ten (10) soil samples for chemical analysis from the soil borings to evaluate soil quality;
3. Installed three (3) groundwater monitoring wells throughout the Site to establish groundwater flow and collected three (3) groundwater samples for chemical analysis to evaluate groundwater quality;
4. Installed five (5) soil vapor probes throughout the Site and collected five (5) samples for chemical analysis.

Hydro Tech attempted to install four (4) additional soil borings and collect eight (8) additional soil samples for chemical analysis during July 2015; however, due to refusal and site access, the soil borings could not be installed. As approved by NYCOER, the remaining work will be performed following demolition.

Summary of Findings of Remedial Investigation

1. Elevation of the property is 17 feet.
2. Depth to groundwater ranges from 7.30 to 8.34 feet at the Site.
3. Groundwater flow is generally from southwest beneath the Site.
4. Bedrock was not encountered at the Site.
5. The stratigraphy of the site, from the surface down to about 12 feet bgs, is classified as fill consisting of a mixture of gravel, sand, rocks, wood and possibly other construction debris. Drilling did not occur deeper than 12 feet bgs and bedrock was not encountered.
6. Soil/fill samples results were compared to NYSDEC Unrestricted Use Soil Cleanup Objectives and Restricted Residential Soil Cleanup Objectives as presented in 6NYCRR Part 375-6.8 and CP51. No PCBs were detected in any soil samples. Trace concentrations of one VOC, acetone (max. 0.10 mg/kg), exceeded Unrestricted Use SCOs. Two semi-volatile organic compounds (SVOCs) consisting of PAH compounds benzo(a)anthracene (max. 1.17 mg.kg) and chrysene (max. 1.23 mg/kg) were detected in one shallow and one deep soil sample at concentrations exceeding Restricted Residential Use SCOs. One pesticide, 4,4'-DDE (max. 0.0079 mg/kg) was detected in one deep soil sample at a concentration exceeding Unrestricted Use SCOs. Six metals including barium (max. 712 mg/kg), cadmium (max. 13.50 mg/kg), copper (max. 2,680 mg/kg), lead (max. 1,450 mg/kg), nickel (max. 145 mg/kg) and zinc (max. 4,620) were detected in shallow and deep samples at concentrations exceeding Restricted Residential Use SCOs. The metals mercury (max. 0.74 mg/kg) and selenium (max. 7.68 mg/kg) were detected in shallow and deep samples at concentrations exceeding Unrestricted Use SCOs. As noted in the soil logs, oily sheens were observed in SP-2 and SP-3 at a depth of 10 to 12 feet bgs. Overall, soil chemistry is consistent with sites with historic fill in New York City.

7. Groundwater sample results were compared to New York State 6NYCRR Part 703.5 Class GA groundwater quality standards (GQS). Groundwater collected during the investigation showed no VOCs, pesticides or PCBs at concentrations exceeding their respective GQS. The SVOCs Benzo(a)anthracene (max. 1.62 µg/L), Benzo(b)fluoranthene (max. 0.90 µg/L), Benzo(k)fluoranthene (max. 1.45 µg/L), Chrysene (max. 1.75 µg/L) and Indeno(1,2,3-cd)pyrene (max. 1.05 µg/L) were detected in MW-1 at concentrations exceeding their respective GQS. Several metals were identified and of those, antimony (max. 32 µg/L), magnesium (max. 39,200 µg/L), manganese (max. 1,580 µg/L) and sodium (max. 334,000 µg/L) were detected in all groundwater samples at concentrations exceeding GQS.

8. Soil vapor results were compared to compounds listed in Table 3.1 Air Guideline Values Derived by the New York State Department of Health (NYSDOH) located in the NYSDOH Final Guidance for Evaluating Soil Vapor Intrusion dated October 2006. Soil vapor samples collected during the RI showed petroleum related VOCs present in low concentrations. Total concentrations of petroleum-related VOCs (BTEX) ranged from 26.58 $\mu g/m^3$ to 462 $\mu g/m^3$. Chlorinated VOCs including 1,1,1-trichloroethane (max. 13 $\mu g/m^3$), tetrachloroethylene (max. 3.80 $\mu g/m^3$) and trichloroethylene (max. 0.42 $\mu g/m^3$) were also detected in the soil vapor samples. Carbon tetrachloride was not detected in any of the soil vapor samples.

Summary of the Remedial Action

The proposed remedial action achieves protection of public health and the environment for the intended use of the property. The proposed remedial action achieves all of the remedial action objectives established for the project and addresses applicable standards, criterion, and guidance; is effective in both the short-term and long-term and reduces mobility, toxicity and volume of contaminants; is cost effective and implementable; and uses standards methods that are well established in the industry.

The proposed remedial action will consist of:

1. Preparation of a Community Protection Statement and performance of all required NYC VCP Citizen Participation activities according to an approved Citizen Participation Plan.
2. Performance of a Community Air Monitoring Program for particulates and volatile organic carbon compounds.
3. Establishment of Track 4 Site-specific Soil Cleanup Objectives (SCOs).
4. Site mobilization involving Site security setup, equipment mobilization, utility mark outs and marking & staking excavation areas.
5. Perform additional site characterization sampling of soil. Four (4) soil probes will be installed and eight (8) soil samples will be collected prior to start of construction (after demolition).
6. Completion of a Waste Characterization Study prior to excavation activities. Waste characterization soil samples will be collected at a frequency dictated by disposal facility(s).
7. Excavation and removal of soil/fill exceeding Track 4 Site Specific SCOs.
   The entire footprint of the Site will be excavated to a depth of approximately 10 feet below grade for development purposes. A small portion of property will be excavated to the depths of 15 feet below grade for an elevator pit. Approximately, 5500 tons of soils will be excavated and removed from this Site.
8. Screening of excavated soil/fill during intrusive work for indications of contamination by visual means, odor, and monitoring with a PID. Appropriate segregation of excavated media on-Site.
9. Management of excavated materials including temporarily stockpiling and segregating in accordance with defined material types and to prevent co-mingling of contaminated material and non-contaminated materials.
10. Removal of one (1) known UST from the northwest portion of the Site and any other USTs encountered during excavation. Registration of tanks and reporting of any petroleum spills associated with UST's and appropriate closure of these petroleum spills in compliance with applicable local, State and Federal laws and regulations.

11. Transportation and off-Site disposal of all soil/fill material at licensed or permitted facilities in accordance with applicable laws and regulations for handling, transport, and disposal, and this plan. Sampling and analysis of excavated media as required by disposal facilities. Appropriate segregation of excavated media on-Site.
12. Collection and analysis of end-point samples to determine the performance of the remedy with respect to attainment of SCOs.
13. Import of materials to be used for backfill and cover in compliance with this plan and in accordance with applicable laws and regulations.
14. Construction of an engineered composite cover consisting of a 3-foot thick concrete mat slab on top of a 3-inch concrete mud slab over a 6-inch layer of compacted crushed stoned beneath all building areas. The rear yard will consist of a 3 ½-inch layer of concrete on a 2-inch thick metal deck to support the parking ramp.
15. Installation of a vapor barrier system consisting of vapor barrier beneath the building slab and outside of sub-grade foundation sidewalls to mitigate soil vapor migration into the building. The vapor barrier system will consist of a 47.2-mil Grace PrePrufe 300R waterproofing vapor barrier below the slab throughout the full building area and a 31.5-mil Grace PrePrufe 160R waterproofing vapor barrier outside all sub-grade foundation sidewalls. All welds, seams and penetrations will be properly sealed to prevent preferential pathways for vapor migration. The vapor barrier system is an Engineering Control for the remedial action. The remedial engineer will certify in the RAR that the vapor barrier system was designed and properly installed to mitigate soil vapor migration into the building.
16. Construction and operation of a cellar and grade-level parking garage with high volume air exchange in conformance with NYC Building Code.
17. Import of materials to be used for backfill and cover in compliance with this plan and in accordance with applicable laws and regulations.
18. Performance of all activities required for the remedial action, including acquisition of required permits and attainment of pretreatment requirements, in compliance with applicable laws and regulations.
19. Excavations will be performed below groundwater table and dewatering is required. Dewatering will be conducted in compliance with city, state, and federal laws and

regulations. Extracted groundwater will either be containerized for off-site licensed or permitted disposal or will be treated under a permit from New York City Department of Environmental Protection (NYCDEP) to meet pretreatment requirements prior to discharge to the sewer system.

20. Implementation of storm-water pollution prevention measures in compliance with applicable laws and regulations.
21. Submission of a RAR that describes the remedial activities, certifies that the remedial requirements have been achieved, defines the Site boundaries, lists any changes from this RAWP, and describes all Engineering and Institutional Controls to be implemented at the Site.
22. Submission of an approved Site Management Plan (SMP) in the Remedial Action Plan (RAR) for long-term management of residual contamination, including plans for operation, maintenance, monitoring, inspection and certification of Engineering and Institutional Controls and reporting at a specified frequency.
23. The property will continue to be registered with an E-Designation at the NYC Buildings Department. Establishment of Engineering Controls and Institutional Controls in this RAWP and a requirement that management of these controls must be in compliance with an approved SMP. Institutional Controls will include prohibition of the following: (1) vegetable gardening and farming; (2) use of groundwater without treatment rendering it safe for the intended use; (3) disturbance of residual contaminated material unless it is conducted in accordance with the SMP; and (4) higher level of land usage without OER-approval.

COMMUNITY PROTECTION STATEMENT

The NYC Office of Environmental Remediation (OER) provides governmental oversight for the cleanup of contaminated property in NYC. This Remedial Action Work Plan ("cleanup plan") describes the findings of prior environmental studies, shows the location of identified contamination at the site, and describes the plans to clean up the site to protect public health and the environment.

This cleanup plan provides a very high level of protection for neighboring communities and also includes many other elements that address common community concerns, such as community air monitoring, odor, dust and noise controls, hours of operation, good housekeeping and cleanliness, truck management and routing, and opportunities for community participation. The purpose of this Community Protection Statement is to explain these community protection measures in non-technical language to simplify community review.

Project Information:

- Site Address: 221 – 227 East 138th Street, Bronx
- NYC Voluntary Cleanup Program Project Number: 16CVCP011X

Project Contacts:

- OER Project Manager: William Wong, 212-788-8841
- Site Project Manager: Morgan Violette, 718-636-0800
- Site Safety Officer: Morgan Violette, 718-636-0800
- Online Document Repository:
  http://www.nyc.gov/html/oer/html/repository/RBronx.shtml

Remedial Investigation and Cleanup Plan: Under the oversight of the NYC OER, a thorough study of this property (called a remedial investigation) has been performed to identify past property usage, to sample and test soils, groundwater and soil vapor, and to identify contaminant sources present on the property. The cleanup plan has been designed to address all contaminant sources that have been identified during the study of this property.

Identification of Sensitive Land Uses: Prior to selecting a cleanup, the neighborhood was evaluated to identify sensitive land uses nearby, such as schools, day care facilities, hospitals and residential areas. The cleanup program was then tailored to address the special conditions of this community.

Qualitative Human Health Exposure Assessment: An important part of the cleanup planning for the Site is a study to find all of the ways that people might come in contact with contaminants at the Site now or in the future. This study is called a Qualitative Human Health Exposure Assessment (QHHEA). A QHHEA was performed for this project. This assessment has considered all known contamination at the Site and evaluated the potential for people to come in contact with this contamination. All identified public exposures will be addressed under this cleanup plan.

Health and Safety Plan: This cleanup plan includes a Construction Health and Safety Plan (CHASP) that is designed to protect community residents and on-Site workers. The elements of this RAWP are in compliance with applicable safety requirements of the United States Occupational Safety and Health Administration (OSHA). This RAWP includes many protective elements including those discussed below.

Site Safety Coordinator: This project has a designated Site safety coordinator to implement the CHASP. The safety coordinator maintains an emergency contact sheet and protocol for management of emergencies. The Site safety coordinator is identified at the beginning of this Community Protection Statement.

Worker Training: Workers participating in cleanup of contaminated material on this project are required to be trained in a 40-hour hazardous waste operators training course and to take annual refresher training. This pertains to workers performing specific tasks including removing contaminated material and installing cleanup systems in contaminated areas.

Community Air Monitoring Plan: Community air monitoring will be performed during this cleanup project to ensure that the community is properly protected from contaminants, dust and odors. Air samples will be tested in accordance with a detailed plan called the Community Air Monitoring Plan or CAMP. Results will be regularly reported to the NYC Office of Environmental Remediation. This cleanup plan also has a plan to address any unforeseen problems that might occur during the cleanup (called a 'Contingency Plan').

Odor, Dust and Noise Control: This cleanup plan includes actions for odor and dust control. These actions are designed to prevent off-Site odor and dust nuisances and includes steps to be taken if nuisances are detected. Generally, dust is managed by application of physical covers and by water sprays. Odors are controlled by limiting the area of open excavations, physical covers, spray foams and by a series of other actions (called operational measures). The project is also required to comply with applicable NYC noise control standards. If you observe problems in these areas, please contact the onsite Project Manager or NYC Office of Environmental Remediation Project Manager listed on the first page of this Community Protection Statement document.

Quality Assurance: This cleanup plan requires that evidence be provided to illustrate that all cleanup work required under the plan has been completed properly. This evidence will be summarized in the final report, called the Remedial Action Report. This report will be submitted to the NYC Office of Environmental Remediation and will be thoroughly reviewed.

Storm Water Management: To limit the potential for soil erosion and discharge, this cleanup plan has provisions for storm water management. The main elements of the storm water management include physical barriers such as tarp covers and erosion fencing, and a program for frequent inspection.

Hours of Operation: The hours for operation of cleanup will comply with the NYC Department of Buildings construction code requirements or according to specific variances

issued by that agency. For this cleanup project, the hours of operation will conform to requirements of the NYC Department of Buildings.

Signage: While the cleanup is in progress, a placard will be prominently posted at the main entrance of the property with a laminated project Fact Sheet that states that the project is in the NYC Voluntary Cleanup Program and provides project contact names and numbers, and a link to the document repository where project documents can be viewed.

Complaint Management: The contractor performing this cleanup is required to address all complaints. If you have any complaints, you can call the facility Project Manager or the NYC Office of Environmental Remediation Project Manager listed on the first page of this Community Protection Statement document, or call 311 and mention the Site is in the NYC Voluntary Cleanup Program.

Utility Mark-outs: To promote safety during excavation in this cleanup, the contractor is required to first identify all utilities and must perform all excavation and construction work in compliance with NYC Department of Buildings regulations.

Soil and Liquid Disposal: All soil and liquid material removed from the Site as part of the cleanup will be transported and disposed of in accordance with all applicable City, State and Federal regulations, and required permits will be obtained.

Soil Chemical Testing and Screening: All excavations will be supervised by a trained and properly qualified environmental professional. In addition to extensive sampling and chemical testing of soils on the Site, excavated soil will be screened continuously using hand-held instruments, by sight, and by smell to ensure proper material handling and management, and community protection.

Stockpile Management: Soil stockpiles will be kept covered with tarps to prevent dust, odor and erosion. Stockpiles will be frequently inspected. Damaged tarp covers will be

promptly replaced. Stockpiles will be protected with silt fences. Hay bales will be used, as needed, to protect storm water catch basins and other discharge points.

Trucks and Covers: Loaded trucks leaving the Site will be covered in compliance with applicable laws and regulations to prevent dust and odor. Trucks will be properly recorded in logs and records and placarded in compliance with applicable City, State and Federal laws, including those of the New York State Department of Transportation. If loads contain wet material that can leak, truck liners will be used. All transport of materials will be performed by licensed truckers and in compliance with applicable laws and regulations.

Imported Material: All fill materials proposed to be brought onto the Site will comply with rules outlined in this cleanup plan and will be inspected and approved by a qualified worker located on the Site. Waste materials will not be brought onto the Site. Trucks entering the Site with imported clean materials will be covered in compliance with applicable laws and regulations.

Equipment Decontamination: All equipment used for cleanup work will be inspected and washed, if needed, before it leaves the Site. Trucks will be cleaned at a truck inspection station on the property before leaving the Site.

Housekeeping: Locations where trucks enter or leave the Site will be inspected every day and cleaned regularly to ensure that they are free of dirt and other materials from the Site.

Truck Routing: Truck routes have been selected to: (a) limit transport through residential areas and past sensitive nearby properties; (b) maximize use of city-mapped truck routes; (c) limit total distance to major highways; (d) promote safety in entry to highways; (e) promote overall safety in trucking; and (f) minimize off-Site line-ups (queuing) of trucks entering the property. Operators of loaded trucks leaving the Site will be instructed not to stop or idle in the local neighborhood.

Final Report: The results of all cleanup work will be fully documented in a final report (called the Remedial Action Report) that will be available for public review online. A link to the online document repository and the public library with Internet access nearest the Site are listed on the first page of this Community Protection Statement document

Long-Term Site Management: If long-term protection is needed after the cleanup is complete, the property owner will be required to comply with an ongoing Site Management Plan that calls for continued inspection of protective controls, such as Site covers. The Site Management Plan is evaluated and approved by the NYC Office of Environmental Remediation. Requirements that the property owner must comply with are defined either in the property's deed or established through a city environmental designation registered with the Department of Buildings. A certification of continued protectiveness of the cleanup will be required from time to time to show that the approved cleanup is still effective.

REMEDIAL ACTION WORK PLAN

1.0 Project Background

Tahoe Development is working with the NYC Office of Environmental Remediation (OER) in the New York City Voluntary Cleanup Program and/or in the "E" Designation Program to investigate and remediate a property located at 221 – 227 East 138th Street in the Mott Haven section of Bronx, New York (the "Site"). A Remedial Investigation (RI) was performed to compile and evaluate data and information necessary to develop this Remedial Action Work Plan (RAWP) in a manner that will render the Site protective of public health and the environment consistent with the contemplated end use. This RAWP establishes remedial action objectives, provides a remedial alternatives analysis that includes consideration of a permanent cleanup, and provides a description of the selected remedial action. The remedial action described in this document provides for the protection of public health and the environment, and complies with applicable environmental standards, criteria and guidance and applicable laws and regulations.

1.1 Site Location and Background

The Site is located at 221 – 227 East 138th Street in the Mott Haven section in Bronx, New York and is identified as Block 2340, Lots 56 and 58 on the New York City Tax Map. Figure 1 shows the Site location. The Site is 10,000-square feet and is bounded by East 140th Street to the north, East 138th Street to the south, Rider Avenue to the east, and Canal Place to the west. A map of the site boundary is shown in Figure 2. Currently, the Site contains a vacant one 1-story factory building that occupies the entirety of lots 56 and 58. The last use of the Subject Property was as a meat production facility.

1.2 Redevelopment Plan

The proposed future use of the Site will consist of a new 10-story mixed-use commercial and residential building with a full cellar and will be approximately 50,000 square feet in net zoning area. The proposed building will occupy the entirety of lots 56 and 58 with the exception of a 30' x 100' rear yard located in the northern portion of the Site. The rear yard will be used as a driveway and ramp for the parking garage in the basement and the first floor and the rear yard will be a 3 ½" thick concrete slab atop a 2 ½" thick metal deck. The cellar will occupy the

entirety of lots 56 and 58 and will be used for parking, residential and maintenance storage, a compactor room and a storm water detention tank. The cellar slab will be a 3-foot 3-inch mat slab. The first floor will consist of two (2) commercial retail units encompassing approximately 3,500 square feet, a residential lobby and recreation space encompassing approximately 400 square feet. The remaining 6,100 square feet of the first floor will be occupied by car and bicycle parking, an enclosed car ramp down to the cellar, refuse storage, a gas meter room, an electrical meters and equipment room and a mechanical closet. The total excavation depth is anticipated to be 10 feet below grade surface (bgs) and 15 feet bgs in the proposed elevator pit. An estimated 3,700 cubic yards (5,500 tons) of soil will be excavated for the building's cellar. Floors 2 – 10 will contain a total of 47 residential units.

Groundwater is expected to be encountered at depths of approximately 7.3-8.3 feet below the ground surface (bgs). Therefore, the majority of the soil excavation will occur below the groundwater table and dewatering will be required.

Layout of the proposed site development is presented in Figure 3. The current zoning designation is M1-4/R7X/MX-13. The proposed use is consistent with existing zoning for the property. The referenced lots will not merge.

The remedial action contemplated under this RAWP may be implemented independently of the proposed redevelopment plan.

1.3 Description of Surrounding Property

The vicinity of the Site consists of commercial and industrial properties. The ground surfaces in the vicinity of the Site consist of asphalt and concrete. The results of the Site inspection and an evaluation of the United States Geological Survey (USGS) 7-½ Minute Topographic Map containing the properties indicate there is one sensitive receptor present within a 0.125-mile radius of the Site. The sensitive receptor is Nacro Freedom, Inc. The Site should not impact upon the sensitive receptor.

Figure 4 shows the surrounding land usage.

1.4 Summary of Past Site Uses and Areas of Concern

Based upon the review of Sanborn Fire Rate Insurance Maps, Property Shark, the City Directory and the NYC Automated City Register Information System (ACRIS) database for the

Site and its vicinity and the Phase I ESA Report prepared by Hydro Tech Environmental, Corp. during March 2015 a Site history was established. According to Sanborn Fire Rate Insurance Maps, the Site was depicted as various one- and two-story commercial buildings, including a farrier shop (1908 Map), a metal spinning factory (1908 Map), a gasoline station and auto repair shop (1935 Map), unspecified warehouse use (1944 Map) and a provisions manufacturing facility (1946 – 2007 Maps), which is the Site's most recent use. According to the City Directory, the occupants of the Site include an electroplating company, a service station, a brass foundry, an auto body shop, an auto repair shop, and a meat packing company. The historical uses of the Site as a gasoline station, an auto repair and auto body shop and various manufacturing likely involved the use of petroleum and/or hazardous materials, potentially having had an adverse impact upon the environmental quality of the Site.

The AOCs identified for this site include:

1. The historical use of the Subject Property as a gasoline station and various manufacturing purposes;
2. The historical use of the adjacent properties as a drain pipe yard, coal yard, manufacturing facility, iron foundry and scrap yard, auto junk yard, filling station and auto repair shop;
3. The presence of an adjacent spill #9101008;
4. The listing of an adjacent property as an Inactive Hazardous Waste Disposal Site;
5. The presence of a Potential Vapor Encroachment Condition;
6. The suspected presence of an underground storage tank;
7. The presence of suspect asbestos-containing material.

It should be noted that adjacent spill #9101008 was closed on June 24, 2015, which is after the publication date of Hydro Tech's Phase I ESA.

1.5 Summary of Work Performed under the Remedial Investigation

Hydro Tech Environmental, Corp. performed the following scope of work:

1. Conducted a Site inspection to identify AOCs and physical obstructions (i.e. structures, buildings, etc.);
2. Installed five (5) soil borings across the entire project Site, and collected ten (10) soil samples for chemical analysis from the soil borings to evaluate soil quality;
3. Installed three (3) groundwater monitoring wells throughout the Site to establish groundwater flow and collected three (3) groundwater samples for chemical analysis to evaluate groundwater quality;
4. Installed five (5) soil vapor probes throughout the Site and collected five (5) samples for chemical analysis.

Hydro Tech attempted to install four (4) additional soil borings and collect eight (8) additional soil samples during July 2015 for chemical analysis however due to refusal and site access; the soil borings could not be installed. As approved by NYCOER, the remaining work will be performed following demolition.

Figure 5 shows the proposed sampling locations of four (4) additional soil borings to be installed and eight (8) soil samples to be collected following demolition.

1.6 Summary of Findings of Remedial Investigation

A remedial investigation was performed and the results are documented in a companion document called "Remedial Investigation Report, 221 – 227 East 138th Street", dated September 2015 (RIR).

1. Elevation of the property is 17 feet.
2. Depth to groundwater ranges from 7.30 to 8.34 feet at the Site.
3. Groundwater flow is generally from southwest beneath the Site.
4. Bedrock was not encountered at the Site.

5. The stratigraphy of the site, from the surface down to about 12 feet bgs, is classified as fill consisting of a mixture of gravel, sand, rocks, wood and possibly other construction debris. Drilling did not occur deeper than 12 feet bgs and bedrock was not encountered.
6. Soil/fill samples results were compared to NYSDEC Unrestricted Use Soil Cleanup Objectives and Restricted Residential Soil Cleanup Objectives as presented in 6NYCRR Part 375-6.8 and CP51. No PCBs were detected in any soil samples. Trace concentrations of one VOC, acetone (max. 0.10 mg/kg), exceeded Unrestricted Use SCOs. Two semi-volatile organic compounds (SVOCs) consisting of PAH compounds benzo(a)anthracene (max. 1.17 mg.kg) and chrysene (max. 1.23 mg/kg) were detected in one shallow and one deep soil sample at concentrations exceeding Restricted Residential Use SCOs. One pesticide, 4,4'-DDE (max. 0.0079 mg/kg) was detected in one deep soil sample at a concentration exceeding Unrestricted Use SCOs. Six metals including barium (max. 712 mg/kg), cadmium (max. 13.50 mg/kg), copper (max. 2,680 mg/kg), lead (max. 1,450 mg/kg), nickel (max. 145 mg/kg) and zinc (max. 4,620) were detected in shallow and deep samples at concentrations exceeding Restricted Residential Use SCOs. The metals mercury (max. 0.74 mg/kg) and selenium (max. 7.68 mg/kg) were detected in shallow and deep samples at concentrations exceeding Unrestricted Use SCOs. As noted in the soil logs, oily sheens were observed in SP-2 and SP-3 at a depth of 10 to 12 feet bgs.
7. Groundwater sample results were compared to New York State 6NYCRR Part 703.5 Class GA groundwater quality standards (GQS). Groundwater collected during the investigation showed no VOCs, pesticides or PCBs at concentrations exceeding their respective GQS. The SVOCs Benzo(a)anthracene (max. 1.62 µg/L), Benzo(b)fluoranthene (max. 0.90 µg/L), Benzo(k)fluoranthene (max. 1.45 µg/L), Chrysene (max. 1.75 µg/L) and Indeno(1,2,3-cd)pyrene (max. 1.05 µg/L) were detected in MW-1 at concentrations exceeding their respective GQS. The SVOCs Bis (2-ethylhexyl) phthalate, Fluoranthene, Phenanthrene and Pyrene were detected in all groundwater samples at concentrations less than their respective GQS. Dissolved metals including antimony (max. 32 µg/L), magnesium (max. 39,200 µg/L), manganese (max. 1,580 µg/L) and sodium (max. 334,000 µg/L) were detected in all groundwater samples at concentrations exceeding GQS.

8. Soil vapor results were compared to compounds listed in Table 3.1 Air Guideline Values Derived by the New York State Department of Health (NYSDOH) located in the NYSDOH Final Guidance for Evaluating Soil Vapor Intrusion dated October 2006. Soil vapor samples collected during the RI showed petroleum related VOCs present in low concentrations. Total concentrations of petroleum-related VOCs (BTEX) ranged from 26.58 $\mu g/m^3$ to 462 $\mu g/m^3$. Chlorinated VOCs including 1,1,1-trichloroethane (max. 13 $\mu g/m^3$), tetrachloroethylene (max. 3.80 $\mu g/m^3$) and trichloroethylene (max. 0.42 $\mu g/m^3$) were also detected in the soil vapor samples. Carbon tetrachloride was not detected in any of the soil vapor samples.

For more detailed results, consult the RIR. Based on an evaluation of the data and information from the RIR and this RAWP, disposal of significant amounts of hazardous waste is not suspected at this site.

2.0 Remedial Action Objectives

Based on the results of the RI, the following Remedial Action Objectives (RAOs) have been identified for this Site:

Soil

- Prevent direct contact with contaminated soil.
- Prevent exposure to contaminants volatilizing from contaminated soil.

Groundwater

- Remove contaminant sources causing impact to groundwater.
- Prevent direct exposure to contaminated groundwater.
- Prevent exposure to contaminants volatilizing from contaminated groundwater.

Soil Vapor

- Prevent exposure to contaminants in soil vapor.
- Prevent migration of soil vapor into dwelling and other occupied structures.

3.0 Remedial Alternatives Analysis

The goal of the remedy selection process is to select a remedy that is protective of human health and the environment taking into consideration the current, intended and reasonably anticipated future use of the property. The remedy selection process begins by establishing RAOs for media in which chemical constituents were found in exceedance of applicable standards, criteria and guidance values (SCGs). Remedial alternatives are then developed and evaluated based on the following ten criteria:

- Protection of human health and the environment;
- Compliance with SCGs;
- Short-term effectiveness and impacts;
- Long-term effectiveness and permanence;
- Reduction of toxicity, mobility, or volume of contaminated material;
- Implementability;
- Cost effectiveness;
- Community acceptance;
- Land use; and
- Sustainability.

As required, a Track 1 Unrestricted Use scenario is evaluated for the remedial action. The following is a detailed description of the alternatives analyzed to address impacted media at the Site:

Alternative 1:

- Selection of NYSDEC 6NYCRR Part 375 Unrestricted Use (Track 1) Soil Cleanup Objectives (SCOs).
- Removal of all soil/fill exceeding Track 1 Unrestricted Use SCOs throughout the Site and confirmation that Track 1 Unrestricted Use SCOs have been achieved with post-excavation endpoint sampling. Based on the results of the Remedial Investigation, it is expected that this alternative would be achieved by describe depth and extent of excavation that would be required to achieve Unrestricted Use SCOs based on RI sampling, for instance “excavating the entire Site to a depth of approximately to 10 feet

below grade to remove all historic fill". If soil/fill containing analytes at concentrations above Unrestricted Use SCOs is still present at the base of the excavation after removal of all soil required for construction of the new building's cellar level is complete, additional excavation would be performed to ensure complete removal of soil/ fill that does not meet Track 1 Unrestricted Use SCOs.

- No Engineering or Institutional Controls are required for a Track 1 cleanup, however, as part of development, a vapor barrier and sub-grade ventilated parking would be installed to prevent potential exposures from soil vapor in the future."

Alternative 2:

- Establishment of Site Specific Track 4 SCOs.
- Removal of all soil/fill exceeding Track 4 Site-specific SCOs and confirmation that Track 4 Site-specific SCOs have been achieved with post-excavation end point sampling. Based on the results of the Remedial Investigation, it is expected that SCOs would be achieved by excavating for construction of the new building's cellar level to a depth of approximately 10 feet across the entire Site and 15 feet in the proposed elevator pit. If soil/fill containing analytes at concentrations above Track 4 Site-Specific SCOs is still present at the base of the excavation, additional excavation would be performed to meet Track 4 Site-Specific SCOs.
- Placement of a composite cover system over the entire Site to prevent exposure to remaining soil/fill;
- Installation of a waterproofing/vapor barrier system beneath the building slab and along foundation side walls to prevent potential exposures from soil vapor;
- Establishment of use restrictions including prohibitions on the use of groundwater from the Site; prohibitions of restricted Site uses, such as farming or vegetable gardening, to prevent future exposure pathways; and prohibition of a higher level of land use without OER approval;
- Establishment of an approved Site Management Plan (SMP) to ensure long-term management of these Engineering and Institutional Controls including the performance of periodic inspections and certification that the controls are performing as they were

intended. The SMP will note that the property owner and property owner's successors and assigns must comply with the approved SMP; and

- The property will continue to be registered with an E-Designation at the NYC Buildings Department.

3.1 Threshold Criteria

Protection of Public Health and the Environment

This criterion is an evaluation of the remedy's ability to protect public health and the environment, and an assessment of how risks posed through each existing or potential pathway of exposure are eliminated, reduced or controlled through removal, treatment, and implementation of Engineering Controls or Institutional Controls. Protection of public health and the environment must be achieved for all approved remedial actions.

Alternative 1 would be protective of human health and the environment by removing all soil/fill exceeding Track 1 Unrestricted Use SCO's and groundwater protection standards, thus eliminating potential for direct contact with contaminated soil/fill once construction is complete and eliminating the risk of contaminants leaching into groundwater.

Alternative 2 would achieve comparable protections of human health and the environment by excavation and removal of most of the historic fill at the Site and by ensuring that remaining soil/fill on-Site meets Track 4 Site-Specific SCO's, as well as by placement of Institutional and Engineering Controls, including a composite cover system. The composite cover system would prevent direct contact with any remaining on-Site soil/fill. Implementing Institutional Controls including a Site Management Plan and continuing the E-designation. Establishment of Track 4 Site-Specific SCO's would minimize the risk of contamination leaching into groundwater.

For both Alternatives, potential exposure to contaminated soils or groundwater during construction would be minimized by implementing a Construction Health and Safety Plan, an approved Soil/Materials Management Plan, and Community Air Monitoring Plan (CAMP). Potential contact with contaminated groundwater would be prevented as its use is prohibited by city laws and regulations. Potential future migration of off-Site soil vapors into the new building

would be prevented by installing a vapor barrier below the building slab and outside foundations walls below grade.

3.2 Balancing Criteria

Compliance with Standards, Criteria and Guidance (SCGs)

This evaluation criterion assesses the ability of the alternative to achieve applicable standards, criteria and guidance.

Alternative 1 would achieve compliance with the remedial goals, chemical-specific SCGs and RAOs for soil through removal of soil to achieve Track 1 Unrestricted Use SCO's and Protection of Groundwater SCO's. Compliance with SCGs for soil vapor would also be achieved by installing a waterproofing/vapor barrier system below the new building's basement slab and continuing the vapor barrier outside of subgrade foundation walls, as part of development. In addition, the basement portion and first floor of the building will contain a parking garage with high volume air exchange that conforms to the NYC Building Code.

Alternative 2 would achieve compliance with the remedial goals, chemical-specific SCG's and RAOs for soil through removal of soil to meet Track 4 Site-Specific SCO's. Compliance with SCG's for soil vapor would also be achieved by installing a waterproofing/vapor barrier system below the new building's basement slab and continuing the vapor barrier outside of subgrade foundation walls. A Site Management Plan would ensure that these controls remained protective for the long term. In addition, the basement portion and first floor of the building will contain a parking garage with high volume air exchange that conforms to the NYC Building Code and will mediate any potential accumulation of soil vapors inside the building.

Health and safety measures contained in the CHASP and Community Air Monitoring Plan (CAMP) will be implemented during Site redevelopment under this RAWP. For both Alternatives, focused attention on means and methods employed during the remedial action would ensure that handling and management of contaminated material would be in compliance with applicable SCGs. These measures will protect on-site workers and the surrounding community from exposure to Site-related contaminants.

Short-Term Effectiveness and Impacts

This evaluation criterion assesses the effects of the alternative during the construction and implementation phase until remedial action objectives are met. Under this criterion, alternatives are evaluated with respect to their short term effects during the remedial action on public health and the environment during implementation of the remedial action, including protection of the community, protection of onsite workers and environmental impacts.

Both Alternative 1 and 2 have similar short-term effectiveness during their implementation, as each requires excavation of historic fill material. Both alternatives would result in short-term dust generation impacts associated with excavation, handling, load out of materials, and truck traffic. Short-term impacts could potentially be higher for Alternative 1 since excavation of greater amounts of historical fill material would take place. However, focused attention to means and methods during a Track 1 removal action, including community air monitoring and appropriate truck routing, would minimize the overall impact of these activities.
An additional short-term adverse impact and risks to the community associated with both remedial alternatives is increased truck traffic. Truck traffic will be routed on the most direct course using major thoroughfares where possible and flag persons will be used to protect pedestrians at Site entrances and exits.

The potential adverse impact to the community, workers and the environment for both alternatives would be minimized through implementation of control plans including a Construction Health and Safety Plan, a Community Air Monitoring Plan (CAMP) and a Soil/Materials Management Plan (SMMP), during all on-Site soil disturbance activities and would minimize the release of contaminants into the environment. Both alternatives provide short-term effectiveness in protecting the surrounding community by decreasing the risk of contact with on-Site contaminants. Construction workers operating under appropriate management procedures and a Construction Health and Safety Plan (CHASP) would provide protection from on-Site contaminants by using personal protective equipment would be worn consistent with the documented risks within the respective work zones.

Long-term effectiveness and permanence

This evaluation criterion addresses the results of a remedial action in terms of its permanence and quantity/nature of waste or residual contamination remaining at the Site after response objectives have been met, such as permanence of the remedial alternative, magnitude of remaining contamination, adequacy of controls including the adequacy and suitability of Engineering Controls/Institutional Controls (ECs/ICs) that may be used to manage contaminant residuals that remain at the Site and assessment of containment systems and ICs that are designed to eliminate exposures to contaminants, and long-term reliability of ECs.

Alternative 1 would achieve long-term effectiveness and permanence related to on-Site contamination by permanently removing all impacted soil/fill above Track 1 Unrestricted Use SCO's. Removal of on-Site contaminant sources will also prevent future groundwater contamination.

Alternative 2 would provide long-term effectiveness by removing most on-Site contamination and attaining Track 4 Site-Specific SCOs; installing a composite cover system across the Site; maintaining use restrictions; establishing an SMP to ensure long-term management of ICs and ECs; and maintaining registration as an E-designated property to memorialize these controls for the long term. The SMP would ensure long-term effectiveness of all ECs and ICs by requiring periodic inspection and certification that these controls and restrictions continue to be in place and are functioning as they were intended, assuring that protections designed into the remedy continue to provide the required level of protection.

Reduction of toxicity, mobility, or volume of contaminated material

This evaluation criterion assesses the remedial alternative's use of remedial technologies that permanently and significantly reduce toxicity, mobility, or volume of contaminants as their principal element. The following is the hierarchy of source removal and control measures that are to be used to remediate a Site, ranked from most preferable to least preferable: removal and/or treatment, containment, elimination of exposure and treatment of source at the point of exposure. It is preferred to use treatment or removal to eliminate contaminants at a Site, reduce the total mass of toxic contaminants, cause irreversible reduction in contaminants mobility, or reduce of total volume of contaminated media.

Alternative 1 will permanently eliminate the toxicity, mobility, and volume of contaminants from on-Site soil by removing all soil in excess of Track 1 Unrestricted Use SCO's.

Alternative 2 would remove most of the historic fill at the Site, and all remaining on-Site soil/fill beneath the new building will meet Track 4 Site-Specific SCO's.

Alternative 1 would remove a greater total mass of contaminants from the Site. The removal of soil to 10 feet across the Site and 15 feet in the proposed elevator pit for the new development in both scenarios would lessen the difference in contaminant mass removal between these two alternatives.

Implementability

This evaluation criterion addresses the technical and administrative feasibility of implementing an alternative and the availability of various services and materials required during its implementation, including technical feasibility of construction and operation, reliability of the selected technology, ease of undertaking remedial action, monitoring considerations, administrative feasibility (e.g. obtaining permits for remedial activities), and availability of services and materials.

The techniques, materials and equipment to implement both Alternatives 1 and 2 are readily available and have been proven to be effective in remediating the contaminants present on the Site. They use standard equipment and technologies that are well established in the industry. The reliability of each remedy is also high. There are no special difficulties associated with any of the activities proposed.

Cost effectiveness

This evaluation criterion addresses the cost of alternatives, including capital costs (such as construction costs, equipment costs, and disposal costs, engineering expenses) and site management costs (costs incurred after remedial construction is complete) necessary to ensure the continued effectiveness of a remedial action.

Since historic fill at the Site was found to extend to a depth of up to 10 feet below grade during the RI, and the new building requires excavation of the entire Site to a depth of 10 feet and 15 feet in the proposed elevator pit, the costs associated with both Alternative 1 and Alternative 2 will likely be comparable. Costs associated with Alternative 1 could potentially be higher than

Alternative 2 if soil with analytes above Track 1 Unrestricted Use SCOs is encountered below the excavation depth required for development. Additional costs would include installation of additional shoring/underpinning, disposal of additional soil, and import of clean soil for backfill. However, long-term costs for Alternative 2 are likely higher than Alternative 1 based on implementation of a Site Management Plan as part of Alternative 2.

The remedial plan would couple the remedial action with the redevelopment of the Site, lowering total costs. The remedial plan will also consider the selection of the most appropriate disposal facilities to reduce transportation and disposal costs during cleanup and redevelopment of the Site.

Community Acceptance

This evaluation criterion addresses community opinion and support for the remedial action. Observations here will be supplemented by public comment received on the RAWP.

This RAWP will be subject to a public review under the NYC VCP and will provide the opportunity for detailed public input on the remedial alternatives and the selected remedy. This public comment will be considered by OER prior to approval of this plan. The Citizen Participation Plan for the project is provided in Appendix 2. Observations here will be supplemented by public comment received on the RAWP. Under both alternatives, the overall goals of the remedial program, to protect public health and the environment and eliminate potential contaminant exposures, have been broadly supported by citizens in NYC communities.

Land use

This evaluation criterion addresses the proposed use of the property. This evaluation has considered reasonably anticipated future uses of the Site and takes into account: current use and historical and/or recent development patterns; applicable zoning laws and maps; NYS Department of State's Brownfield Opportunity Areas (BOA) pursuant to section 970-r of the general municipal law; applicable land use plans; proximity to real property currently used for residential use, and to commercial, industrial, agricultural, and/or recreational areas; environmental justice impacts, Federal or State land use designations; population growth patterns and projections; accessibility to existing infrastructure; proximity of the site to important cultural resources and natural resources, potential vulnerability of groundwater to contamination that

might emanate from the site, proximity to flood plains, geography and geology; and current Institutional Controls applicable to the site.

The current, intended, and reasonably anticipated future land use of the Site and its surroundings are compatible with the selected remedy of soil remediation. The proposed future use of the Site includes a 10-story mixed-use building that contains two (2) commercial units at grade, forty-seven (47) residential units that will be a mixture of rental, condominiums and affordable units and parking spaces at- and below grade. Following remediation, the Site will meet either Track 1 Unrestricted Use or Track 4 Site-Specific SCOs, both of which are protective of public health and the environment for its planned residential use. The proposed use is compliant with the property's zoning and is consistent with recent development patterns. The areas surrounding the site is urban and consists of predominantly mixed residential and commercial buildings in zoning districts designated for commercial and residential uses. The development would remediate a vacant contaminated lot and provide a modern residential and commercial building. The proposed development would clean up the property and make it safer, create new employment opportunities, living space, and other economic benefits from land revitalization.

Temporary short-term project impacts are being mitigated through site management controls and truck traffic controls during remediation activities. Following remediation, the Site will meet either Track 1 Unrestricted Use SCOs or Track 4 Site-Specific SCOs, both of which are protective of public health and the environmental for its planned use.

The Site is not in close proximity to important cultural resources, including federal or state historic or heritage sites or Native American religious sites, natural resources, waterways, wildlife refuges, wetlands, or critical habitats of endangered or threatened species. The Site is located in an urban area and not in proximity to fish or wildlife and neither alternative would result in any potential exposure pathways of contaminant migration affecting fish or wildlife.

The remedial action is also protective of groundwater natural resources. The Site does not lie in a Federal Emergency Management Agency (FEMA)-designated flood plain. Both alternatives are equally protective of natural resources and cultural resources. Improvements in the current environmental condition of the property achieved by both alternatives considered in this plan are consistent with the City's goals for cleanup of contaminated land.

Sustainability of the Remedial Action

This criterion evaluates the overall sustainability of the remedial action alternatives and the degree to which sustainable means are employed to implement the remedial action including those that take into consideration NYC's sustainability goals defined in PlaNYC: A Greener, Greater New York. Sustainability goals may include: maximizing the recycling and reuse of non-virgin materials; reducing the consumption of virgin and non-renewable resources; minimizing energy consumption and greenhouse gas emissions; improving energy efficiency; and promotion of the use of native vegetation and enhancing biodiversity during landscaping associated with Site development.

While Alternative 2 would potentially result in lower energy usage based on reducing the volume of material transported off-Site, both remedial alternatives are comparable with respect to the opportunity to achieve sustainable remedial action. The remedial plan for either alternative would take into consideration the shortest trucking routes during off-Site disposal of historic fill and other soils, which would reduce greenhouse gas emissions and conserve energy used to fuel trucks. The New York City Clean Soil Bank program is available for reuse of any clean native soils under either alternative. A complete list of green remedial activities considered as part of the NYC VCP is included in a Sustainability Statement.

4.0 Remedial Action

4.1 Summary of Preferred Remedial Action

The preferred remedial action alternative is Alternative 2, the Track 4 remedial action. The preferred remedial action achieves protection of public health and the environment for the intended use of the property. The preferred remedial action will achieve all of the remedial action objectives established for the project and addresses applicable SCGs. The preferred remedial action is effective in both the short-term and long-term and reduces mobility, toxicity and volume of contaminants. The preferred remedial action alternative is cost effective and implementable and uses standards methods that are well established in the industry.

The proposed remedial action will consist of:

1. Preparation of a Community Protection Statement and performance of all required NYC VCP Citizen Participation activities according to an approved Citizen Participation Plan.
2. Performance of a Community Air Monitoring Program for particulates and volatile organic carbon compounds.
3. Establishment of Track 4 Site-specific Soil Cleanup Objectives (SCOs).
4. Site mobilization involving Site security setup, equipment mobilization, utility mark outs and marking & staking excavation areas.
5. Perform additional site characterization sampling of soil. Four (4) soil probes will be installed and eight (8) soil samples will be collected prior to start of construction (after demolition).
6. Completion of a Waste Characterization Study prior to excavation activities. Waste characterization soil samples will be collected at a frequency dictated by disposal facility(s).
7. Excavation and removal of soil/fill exceeding Track 4 Site Specific SCOs.
   The entire footprint of the Site will be excavated to a depth of approximately 10 feet below grade for development purposes. A small portion of property will be excavated to the depths of 15 feet below grade for an elevator pit. Approximately, 5500 tons of soils will be excavated and removed from this Site.

8. Screening of excavated soil/fill during intrusive work for indications of contamination by visual means, odor, and monitoring with a PID. Appropriate segregation of excavated media on-Site.
9. Management of excavated materials including temporarily stockpiling and segregating in accordance with defined material types and to prevent co-mingling of contaminated material and non-contaminated materials.
10. Removal of one (1) known UST from the northwest portion of the Site and any other USTs encountered during excavation. Registration of tanks and reporting of any petroleum spills associated with UST's and appropriate closure of these petroleum spills in compliance with applicable local, State and Federal laws and regulations.
11. Transportation and off-Site disposal of all soil/fill material at licensed or permitted facilities in accordance with applicable laws and regulations for handling, transport, and disposal, and this plan. Sampling and analysis of excavated media as required by disposal facilities. Appropriate segregation of excavated media on-Site.
12. Collection and analysis of end-point samples to determine the performance of the remedy with respect to attainment of SCOs.
13.
14. Import of materials to be used for backfill and cover in compliance with this plan and in accordance with applicable laws and regulations.
15. Construction of an engineered composite cover consisting of a 3-foot thick concrete mat slab on top of a 3-inch concrete mud slab over a 6-inch layer of compacted crushed stoned beneath all building areas. The rear yard will consist of a 3 ½-inch layer of concrete on a 2-inch thick metal deck to support the parking ramp.
16. Installation of a vapor barrier system consisting of vapor barrier beneath the building slab and outside of sub-grade foundation sidewalls to mitigate soil vapor migration into the building. The vapor barrier system will consist of a 47.2-mil Grace PrePrufe 300R waterproofing vapor barrier below the slab throughout the full building area and a 31.5-mil Grace PrePrufe 160R waterproofing vapor barrier outside all sub-grade foundation sidewalls. All welds, seams and penetrations will be properly sealed to prevent preferential pathways for vapor migration. The vapor barrier system is an Engineering Control for the remedial action. The remedial engineer will certify in the

RAR that the vapor barrier system was designed and properly installed to mitigate soil vapor migration into the building.

17. Construction and operation of a cellar and grade-level parking garage with high volume air exchange in conformance with NYC Building Code.
18. Import of materials to be used for backfill and cover in compliance with this plan and in accordance with applicable laws and regulations.
19. Performance of all activities required for the remedial action, including acquisition of required permits and attainment of pretreatment requirements, in compliance with applicable laws and regulations.
20. Excavations will be performed below groundwater table and dewatering is required. Dewatering will be conducted in compliance with city, state, and federal laws and regulations. Extracted groundwater will either be containerized for off-site licensed or permitted disposal or will be treated under a permit from New York City Department of Environmental Protection (NYCDEP) to meet pretreatment requirements prior to discharge to the sewer system.
21. Implementation of storm-water pollution prevention measures in compliance with applicable laws and regulations.
22. Submission of a RAR that describes the remedial activities, certifies that the remedial requirements have been achieved, defines the Site boundaries, lists any changes from this RAWP, and describes all Engineering and Institutional Controls to be implemented at the Site.
23. Submission of an approved Site Management Plan (SMP) in the Remedial Action Plan (RAR) for long-term management of residual contamination, including plans for operation, maintenance, monitoring, inspection and certification of Engineering and Institutional Controls and reporting at a specified frequency.
24. The property will continue to be registered with an E-Designation at the NYC Buildings Department. Establishment of Engineering Controls and Institutional Controls in this RAWP and a requirement that management of these controls must be in compliance with an approved SMP. Institutional Controls will include prohibition of the following: (1) vegetable gardening and farming; (2) use of groundwater without treatment rendering it safe for the intended use; (3) disturbance of residual

contaminated material unless it is conducted in accordance with the SMP; and (4) higher level of land usage without OER-approval.

4.2 Soil Cleanup Objectives and Soil/ Fill Management

Track 4 Site Specific SCOs are proposed for this project.
The following Track 4 Site-Specific SCO's will be utilized for this project:

Contaminant	Site-Specific SCO's
Total SVOCs	100 ppm
Lead	800 ppm
Mercury	1.5 ppm

Soil and materials management on-Site and off-Site, including excavation, handling and disposal, will be conducted in accordance with the Soil/Materials Management Plan in Appendix 4. Discrete contaminant sources (such as hotspots) identified during the remedial action will be identified by GPS or surveyed. This information will be provided in the Remedial Action Report.

Soil/Fill Excavation and Removal

The site will be excavated to 10 feet below grade and 15 feet below grade in the vicinity of the proposed elevator pit. The location of planned excavations is shown in Figure 6. The total quantity of soil/fill expected to be excavated and disposed off-Site is 5,500 tons. For each disposal facility to be used in the remedial action, a letter from the developer/QEP to the receiving facility requesting approval for disposal and a letter back to the developer/QEP providing approval for disposal will be submitted to OER prior to any transport and disposal of soil at a facility.
Disposal facilities will be reported to OER when they are identified and prior to the start of remedial action.

End-point Sampling

End-point samples will be analyzed for compounds and elements as described below utilizing the following methodology:

- Volatile organic compounds by EPA Method 8260;
- Semi-volatile organic compounds by EPA Method 8270;
- Target Analyte List metals; and
- Pesticides/PCBs by EPA Method 8081/8082.

New York State ELAP certified labs will be used for all end-point sample analyses. Labs performing end-point sample analyses will be reported in the RAR. The RAR will provide a tabular and map summary of all end-point sample results and will include all data including non-detects and applicable standards and/or guidance values.

Confirmation End-point Sampling

Removal actions for development purposes under this plan will be performed in conjunction with confirmation end-point soil sampling. Four (4) confirmation samples will be collected from the base of the excavation at locations to be determined by OER. To evaluate attainment of Track 4 SCOs, analytes will include those for which SCOs have been developed determined by the analytical methods described above. If Track 1 Unrestricted Use SCOs are pursued, samples will be analyzed for VOCs, SVOCs, pesticides, PCBs and metals according to analytical methods described above. A proposed confirmation endpoint sampling plan is provided in Figure 7.

Hotspot End-point Sampling

End-point samples will be collected from the base of excavation at each of the two (2) hotspot locations identified in the Remedial Investigation, according to the procedure listed below. Hotspots include SP-3 for lead and mercury and the uncharacterized northwestern portion of the Site. End-point samples will be analyzed for SCO trigger parameters.

For any hotspots identified during this remedial program, including any hotspots identified during the remedial action, hotspot removal actions will be performed to ensure that hotspots are fully removed and end-point samples will be collected at the following frequency:

1. For excavations less than 20 feet in total perimeter, at least one bottom sample and one sidewall sample biased in the direction of surface runoff.
2. For excavations 20 to 300 feet in perimeter:

- For surface removals, one sample from the top of each sidewall for every 30 linear feet of sidewall and one sample from the excavation bottom for every 900 square feet of bottom area.
- For subsurface removals, one sample from each sidewall for every 30 linear feet of sidewall and one sample from the excavation bottom for every 900 square feet of bottom area.

3. For sampling of volatile organics, bottom samples should be taken within 24 hours of excavation, and should be taken from the zero to six-inch interval at the excavation floor. Samples taken after 24 hours should be taken at six to twelve inches.
4. For contaminated soil removal, post remediation soil samples for laboratory analysis should be taken immediately after contaminated soil removal. If the excavation is enlarged horizontally, additional soil samples will be taken pursuant to bullets 1-3 above.

Post-remediation end-point sample locations and depth will be biased towards the areas and depths of highest contamination identified during previous sampling episodes unless field indicators such as field instrument measurements or visual contamination identified during the remedial action indicate that other locations and depths may be more heavily contaminated. In all cases, post-remediation samples should be biased toward locations and depths of the highest expected contamination. A proposed hotspot endpoint sampling plan is provided in Figure 7.

If either LNAPL and/or DNAPL are detected, appropriate samples will be collected for characterization and "finger print analysis" and required regulatory reporting (i.e. spills hotline) will be performed.

Quality Assurance/Quality Control

The fundamental QA objective with respect to accuracy, precision and sensitivity of analysis for laboratory analytical data is to achieve the QC acceptance of the analytical protocol. The laboratory will address the accuracy, precision and completeness requirements for all data generated.

One trip blank will be submitted to the laboratory with each shipment of soil samples. Field QA/QC will include the following procedures:

- Calibration of field equipment, including PID, on a daily basis;
- Use of dedicated and/or disposable field sampling equipment;
- Proper sample handling and preservation;
- Completion of report logs.

The above procedures will be executed as follows:

- Disposable sampling equipment will be used to minimize cross-contamination between samples;
- For each of the parameters analyzed, a sufficient sample volume will be collected to adhere to the specific analytical protocol, and provide sufficient sample for reanalysis if necessary;
- Because plasticizers and other organic compounds inherent in plastic containers may contaminate samples requiring organic analysis, samples will be collected in glass containers;
- Appropriate sample preservation techniques, including cold temperature storage at 4 degrees Celsius, will be utilized to ensure that the analytical parameters concentrations do not change between the time of sample collection and analysis; and
- Samples will be analyzed prior to the expiration of the respective holding time for each analytical parameter to ensure the integrity of the analytical results.

Import of Soils

Soil import is not planned on this project.

Reuse of Onsite Soils

Soil reuse is not planned on this project.

4.3 Engineering Controls

Engineering Controls will be employed in the remedial action to address residual contamination remaining at the site. The Site has three (3) primary Engineering Control Systems. These are:

(1) Composite Cover System
(2) Soil Vapor Barrier System
(3) Sub-grade ventilated garage

Composite Cover System

Exposure to residual soil/fill will be prevented by an engineered, composite cover system to be built on the Site. This composite cover system will be comprised of a 3 ½-inch thick concrete slab atop a 2-inch thick metal deck in the rear yard that will be used as a driveway and ramp for the parking garage in the basement. The cellar slab will be a 3-foot 3-inch concrete mat slab atop a 2-inch mud slab and a 6-inch layer of compacted crushed stone.

Figure 8A shows the typical design for each remedial cover type used on this Site and their locations. The composite cover system will be a permanent engineering control. The system will be inspected and its performance certified at specified intervals as required by this RAWP and the Site Management Plan. A Soil and Materials Management Plan will be included in the Site Management Plan and will outline the procedures to be followed in the event that the composite cover system and underlying residual soil/fill is disturbed after the remedial action is complete. Maintenance of this composite cover system will be described in the Site Management Plan in the Remedial Action Report.

Vapor Barrier System

Migration of soil vapor from onsite or offsite sources into the building will be mitigated with a combination of building slab and vapor barrier. The vapor barrier will consist of a 47-mil Grace PrePrufe 300R waterproofing vapor barrier installed below the slab and a 31.5-mil Grace PrePrufe 160R waterproofing vapor barrier installed outside the foundation sidewalls. The vapor barrier will be installed according to manufacturer's specifications by contractors to be determined at a later date.

The vapor barrier will extend throughout the area occupied by the footprint of the new building and up the foundation sidewalls and will be installed in accordance with manufacturer specifications.

A plan view showing the location of the proposed vapor barrier system is provided in Figure 8B. Typical design sections for the vapor barrier on slab and sidewalls are provided in Figure 8B. Product specification sheets are provided in Appendix 6. The Remedial Action Report will include as-built drawings and diagrams; manufacturer documentation; and photographs.

The Remedial Action Report will include a PE-certified letter (on company letterhead) from the primary contractor responsible for installation oversight and field inspections and a copy of the manufacturer's certificate of warranty.

The Vapor Barrier System is a permanent engineering control and will be inspected and its performance certified at specified intervals as required by this RAWP and the Site Management Plan. A Soil and Materials Management Plan will be included in the Site Management Plan and will outline the procedures to be followed in the event that the composite cover system and underlying vapor barrier system is disturbed after the remedial action is complete. Maintenance of these systems will be described in the Site Management Plan in the Remedial Action Report.

Ventilated Parking Garage

Sub grade parking garage will be operated per requirements and codes of New York City Department of Buildings.

4.4 Institutional Controls

A series of Institutional Controls (IC's) are required under this Remedial Action to assure permanent protection of public health by elimination of exposure to residual materials. These IC's define the program to operate, maintain, inspect and certify the performance of Engineering Controls and Institutional Controls on this property. Institutional Controls would be implemented in accordance with a Site Management Plan included in the final Remedial Action Report (RAR). Institutional Controls would be:

- Continued registration of the E-Designation for the property. This RAWP includes a description of all ECs and ICs and summarizes the requirements of the SMP which will note that the property owner and property owner's successors and assigns must comply with the approved SMP;
- Submittal of a SMP in the RAR for approval by OER that provides procedures for appropriate operation, maintenance, inspection, and certification of ECs and IC's. SMP will require that the property owner and property owner's successors and assigns will submit to OER a periodic written statement that certifies that: (1) controls employed at the Site are unchanged from the previous certification or that any changes to the controls were approved by OER; and, (2) nothing has occurred that impairs the ability of the

controls to protect public health and environment or that constitute a violation or failure to comply with the SMP. OER retains the right to enter the Site in order to evaluate the continued maintenance of any controls. This certification shall be submitted at a frequency to be determine by OER in the SMP and will comply with RCNY §43-1407(l)(3).

- Vegetable gardens and farming on the Site are prohibited in contact with residual soil materials;
- Use of groundwater underlying the Site is prohibited without treatment rendering it safe for its intended use;
- All future activities on the Site that will disturb residual material must be conducted pursuant to the soil management provisions in an approved SMP;
- The Site will be used for residential and commercial use and will not be used for a higher level of use without prior approval by OER.

4.5 Site Management Plan

Site Management is the last phase of remediation and begins with the approval of the Remedial Action Report and issuance of the Notice of Completion (NOC) for the Remedial Action. The Site Management Plan (SMP) describes appropriate methods and procedures to ensure implementation of all ECs and ICs that are required by this RAWP. The Site Management Plan is submitted as part of the RAR but will be written in a manner that allows its use as an independent document. Site Management continues until terminated in writing by OER. The property owner is responsible to ensure that all Site Management responsibilities defined in the Site Management Plan are implemented.

The SMP will provide a detailed description of the procedures required to manage residual soil/fill left in place following completion of the remedial action in accordance with the Voluntary Cleanup Agreement with OER. This includes a plan for: (1) implementation of EC's and ICs; (2) operation and maintenance of EC's; (3) inspection and certification of IC's and EC's.

Site management activities and EC/IC certification will be scheduled by OER on a periodic basis to be established in the RAR and the SMP and will be subject to review and modification by

OER. The Site Management Plan will be based on a calendar year and certification reports will be due for submission to OER by July 30 of the year following the reporting period.

4.6 Qualitative Human Health Exposure Assessment

The objective of the qualitative exposure assessment is to identify potential receptors and pathways for human exposure to the contaminants of concern (COC) that are present at, or migrating from, the Site. The identification of exposure pathways describes the route that the COC takes to travel from the source to the receptor. An identified pathway indicates that the potential for exposure exists; it does not imply that exposures actually occur.

Data and information reported in the Remedial Investigation Report (RIR) are sufficient to complete a Qualitative Human Health Exposure Assessment (QHHEA) for this project. As part of the VCP process, a QHHEA was performed to determine whether the Site poses an existing or future health hazard to the Site's exposed or potentially exposed population. The sampling data from the RI were evaluated to determine whether there is any health risk under current and future conditions by characterizing the exposure setting, identifying exposure pathways, and evaluating contaminant fate and transport. This QHHEA was prepared in accordance with Appendix 3B and Section 3.3 (b) 8 of the NYSDEC Draft DER-10 Technical Guidance for Site Investigation and Remediation.

Known and Potential Contaminant Sources

Based on the results of the RIR, the contaminants of concern are:

Soil:

- Metals, including Barium, Cadmium, Copper, Lead, Nickel and Zinc exceeded Restricted Residential Use;

Groundwater:

- SVOCs, including Benzo(a)anthracene, Benzo(b)fluoranthene, Benzo(k)fluoranthene, Bis (2-ethylhexyl) phthalate, Chrysene and Indeno(1,2,3-cd)pyrene exceeded GQS;
- Dissolved metals Antimony, Magnesium, Manganese and Sodium, exceeded GQS.

Soil Vapor:

- Petroleum VOCs including 1,2,4-Trimethylbenzene, 1,3,5-Trimethylbenzene, Benzene, Ethyl Benzene, n-Heptane, n-Hexane, o-Xylene, p- & m-Xylenes were detected at elevated concentrations;
- Chlorinated hydrocarbons including 1,1,1-Trichloroethane, Chloroform, Dichlorodifluoromethane, Methylene Chloride, Tetrachloroethylene and Trichlorofluoromethane were detected at elevated concentrations.

Nature, Extent, Fate and Transport of Contaminants

SVOCs and metals are present in the materials throughout the Site and are consistent with the presence of historic fill material. Metals present in SP-3 indicate a hot spot that will be exported offsite. Elevated VOCs detected in soil vapor were not detected in soils and the installation of a vapor barrier will protect future residents of the proposed residential and commercial building. The presence of VOCs in soil vapor may be an indicator of migration from an off-site source. Groundwater will be encountered during site development and dewatering will be required.

Receptor Populations

On-Site Receptors: The site is currently a vacant commercial building and access to the Site is restricted by a locked door. Onsite receptors are limited to trespassers, site representatives and visitors granted access to the property. During construction, potential on-site receptors include construction workers, site representatives, and visitors. Under proposed future conditions, potential on-site receptors include adult and child building residents, workers and visitors.
Off-Site Receptors: Potential off-site receptors within a 500-foot radius of the Site include adult and child residents; commercial and construction workers; pedestrians; and trespassers based on the following land uses within 500 feet of the Site:

1. Commercial Businesses – existing and future
2. Residential Buildings – existing and future
3. Building Construction/ Renovation – existing and future
4. Pedestrians, Trespassers, Cyclists – existing and future
5. Schools – existing and future

Potential Routes of Exposure

Three potential primary routes exist by which chemicals can enter the body: ingestion, inhalation, and dermal absorption. Exposure can occur based on the following potential media:

- Ingestion of groundwater or fill/ soil;
- Inhalation of vapors or particulates; and
- Dermal absorption of groundwater or fill/ soil.

Potential Exposure Points

Current Conditions: The site is currently capped with concrete and tile and there are no potential exposure pathways from ingestion, inhalation, or dermal absorption of soil/ fill. Groundwater is not exposed at the site. The site is served by the public water supply and groundwater is not used at the site for potable supply and there is no potential for exposure. Due to the age of the building and potential cracks in the foundation and slab, a potential for soil vapor to accumulate on site exists.

Construction/ Remediation Conditions: During the remedial action, onsite workers will come into direct contact with surface and subsurface soils as a result of on-Site construction and excavation activities. On-Site construction workers potentially could ingest, inhale or have dermal contact with exposed impacted soil and fill. Similarly, off-Site receptors could be exposed to dust and vapors from on-Site activities. Due to the depth of groundwater, direct contact with groundwater is expected. During construction, on-Site and off-Site exposures to contaminated dust from on-Site will be addressed through the Soil/Materials Management Plan, dust controls, and through the implementation of the Community Air-Monitoring Program and a Construction Health and Safety Plan.

Proposed Future Conditions: Under future remediated conditions, all soils in excess of Track 4 SCOs will be removed. The site will be fully capped, preventing potential direct exposure to soil and groundwater remaining in place, and engineering controls (vapor barrier) will prevent any potential exposure due to inhalation by preventing soil vapor intrusion. The site is served by the public water supply, and groundwater is not used at the site. There are no plausible off-site pathways for oral, inhalation, or dermal exposure to contaminants derived from the site.

Overall Human Health Exposure Assessment

There are potential complete exposure pathways for the current site condition. There are potential complete exposure pathways that require mitigation during implementation of the remedy. There are no complete exposure pathways under future conditions after the site is developed. This assessment takes into consideration the reasonably anticipated use of the site, which includes a residential structure, site-wide surface cover, a ventilated garage and a subsurface vapor barrier system for the building. Under current conditions, on-Site exposure pathways exist for those with access to the Site and trespassers. During remedial construction, on-Site and off-Site exposures to contaminated dust from historic fill material will be addressed through dust controls, and through the implementation of the Community Air Monitoring Program, the Soil/Materials Management Plan, and a Construction Health and Safety Plan. Potential post-construction use of groundwater is not considered an option because groundwater in this area of New York City is not used as a potable water source. There are no surface waters in close proximity to the Site that could be impacted or threatened.

5.0 Remedial Action Management

5.1 Project Organization and Oversight

Principal personnel who will participate in the remedial action include Morgan Violette, Project Geologist and Rachel Ataman, Senior Vice President The Professional Engineer (PE) and Qualified Environmental Professional (QEP) for this project are Shaik A. Saad and Mark E. Robbins.

5.2 Site Security

Site access will be controlled by gated entrances to the fenced property.

5.3 Work Hours

The hours for operation of cleanup will comply with the NYC Department of Buildings construction code requirements or according to specific variances issued by that agency. The hours of operation will be conveyed to OER during the pre-construction meeting.

5.4 Construction Health and Safety Plan

The Health and Safety Plan is included in Appendix 5. The Site Safety Coordinator will be Morgan Violette. Remedial work performed under this RAWP will be in full compliance with applicable health and safety laws and regulations, including Site and OSHA worker safety requirements and HAZWOPER requirements. Confined space entry, if any, will comply with OSHA requirements and industry standards and will address potential risks. The parties performing the remedial construction work will ensure that performance of work is in compliance with the HASP and applicable laws and regulations. The HASP pertains to remedial and invasive work performed at the Site until the issuance of the Notice of Completion.

All field personnel involved in remedial activities will participate in training required under 29 CFR 1910.120, such as 40-hour hazardous waste operator training and annual 8-hour refresher training. Site Safety Officer will be responsible for maintaining workers training records. Personnel entering any exclusion zone will be trained in the provisions of the HASP and will comply with all requirements of 29 CFR 1910.120. Site-specific training will be provided to field personnel. Additional safety training may be added depending on the tasks performed. Emergency telephone numbers will be posted at the site location before any remedial work begins. A safety meeting will be conducted before each shift begins. Topics to be discussed include task hazards and protective measures (physical, chemical, environmental); emergency procedures; PPE levels and other relevant safety topics. Meetings will be documented in a log book or specific form.

An emergency contact sheet with names and phone numbers is included in the CHASP. That document will define the specific project contacts for use in case of emergency.

5.5 Community Air Monitoring Plan

Real-time air monitoring for volatile organic compounds (VOCs) and particulate levels at the perimeter of the exclusion zone or work area will be performed. Continuous monitoring will be performed for all ground intrusive activities and during the handling of contaminated or potentially contaminated media. Ground intrusive activities include, but are not limited to, soil/waste excavation and handling, test pit excavation or trenching, and the installation of soil borings or monitoring wells.

Periodic monitoring for VOCs will be performed during non-intrusive activities such as the collection of soil and sediment samples or the collection of groundwater samples from existing monitoring wells. Periodic monitoring during sample collection, for instance, will consist of taking a reading upon arrival at a sample location, monitoring while opening a well cap or overturning soil, monitoring during well bailing/purging, and taking a reading prior to leaving a sample location. Depending upon the proximity of potentially exposed individuals, continuous monitoring may be performed during sampling activities. Examples of such situations include groundwater sampling at wells on the curb of a busy urban street, in the midst of a public park, or adjacent to a school or residence. Exceedances of action levels observed during performance of the Community Air Monitoring Plan (CAMP) will be reported to the OER Project Manager and included in the Daily Report.

VOC Monitoring, Response Levels, and Actions

Volatile organic compounds (VOCs) will be monitored at the downwind perimeter of the immediate work area (i.e., the exclusion zone) on a continuous basis during invasive work. Upwind concentrations will be measured at the start of each workday and periodically thereafter to establish background conditions. The monitoring work will be performed using equipment appropriate to measure the types of contaminants known or suspected to be present. The equipment will be calibrated at least daily for the contaminant(s) of concern or for an appropriate surrogate. The equipment will be capable of calculating 15-minute running average concentrations, which will be compared to the levels specified below.

- If the ambient air concentration of total organic vapors at the downwind perimeter of the work area or exclusion zone exceeds 5 parts per million (ppm) above background for the 15-minute average, work activities will be temporarily halted and monitoring continued. If the total organic vapor level readily decreases (per instantaneous readings) below 5 ppm over background, work activities will resume with continued monitoring.
- If total organic vapor levels at the downwind perimeter of the work area or exclusion zone persist at levels in excess of 5 ppm over background but less than 25 ppm, work activities will be halted, the source of vapors identified, corrective actions taken to abate emissions, and monitoring continued. After these steps, work activities will resume provided that the total organic vapor level 200 feet downwind of the exclusion zone or

half the distance to the nearest potential receptor or residential/commercial structure, whichever is less - but in no case less than 20 feet, is below 5 ppm over background for the 15-minute average.

- If the organic vapor level is above 25 ppm at the perimeter of the work area, activities will be shutdown.

All 15-minute readings must be recorded and be available for OER personnel to review. Instantaneous readings, if any, used for decision purposes will also be recorded.

Particulate Monitoring, Response Levels, and Actions

Particulate concentrations will be monitored continuously at the upwind and downwind perimeters of the exclusion zone at temporary particulate monitoring stations. The particulate monitoring will be performed using real-time monitoring equipment capable of measuring particulate matter less than 10 micrometers in size (PM-10) and capable of integrating over a period of 15 minutes (or less) for comparison to the airborne particulate action level. The equipment will be equipped with an audible alarm to indicate exceedance of the action level. In addition, fugitive dust migration should be visually assessed during all work activities.

- If the downwind PM-10 particulate level is 100 micrograms per cubic meter (mcg/m3) greater than background (upwind perimeter) for the 15-minute period or if airborne dust is observed leaving the work area, then dust suppression techniques will be employed. Work will continue with dust suppression techniques provided that downwind PM-10 particulate levels do not exceed 150 mcg/m3 above the upwind level and provided that no visible dust is migrating from the work area.
- If, after implementation of dust suppression techniques, downwind PM-10 particulate levels are greater than 150 mcg/m3 above the upwind level, work will be stopped and a re-evaluation of activities initiated. Work will resume provided that dust suppression measures and other controls are successful in reducing the downwind PM-10 particulate concentration to within 150 mcg/m3 of the upwind level and in preventing visible dust migration.

All readings will be recorded and be available for OER personnel to review.

5.6 Agency Approvals

All permits or government approvals required for remedial construction have been or will be obtained prior to the start of remedial construction. Approval of this RAWP by OER does not constitute satisfaction of these requirements and will not be a substitute for any required permit.

5.7 Site Preparation

Pre-Construction Meeting

OER will be invited to attend the pre-construction meeting at the Site with all parties involved in the remedial process prior to the start of remedial construction activities.

Mobilization

Mobilization will be conducted as necessary for each phase of work at the Site. Mobilization includes field personnel orientation, equipment mobilization (including securing all sampling equipment needed for the field investigation), marking/staking sampling locations and utility mark-outs. Each field team member will attend an orientation meeting to become familiar with the general operation of the Site, health and safety requirements, and field procedures.

Utility Marker Layouts, Easement Layouts

The presence of utilities and easements on the Site will be fully investigated prior to the performance of invasive work such as excavation or drilling under this plan by using, at a minimum, the One-Call System (811). Underground utilities may pose an electrocution, explosion, or other hazard during excavation or drilling activities. All invasive activities will be performed incompliance with applicable laws and regulations including NYC Building Code to assure safety. Utility companies and other responsible authorities will be contacted to locate and mark the locations, and a copy of the Mark-Out Ticket will be retained by the contractor prior to the start of drilling, excavation or other invasive subsurface operations. Overhead utilities may also be present within the anticipated work zones. Electrical hazards associated with drilling in the vicinity of overhead utilities will be prevented by maintaining a safe distance between overhead power lines and drill rig masts.

Proper safety and protective measures pertaining to utilities and easements, and compliance with all laws and regulations will be employed during invasive and other work contemplated under this RAWP. The integrity and safety of on-Site and off-Site structures will be maintained during all invasive, excavation or other remedial activity performed under the RAWP.

Dewatering

Dewatering is anticipated during remediation and construction. Dewatering will be performed in order to excavate soil and fill material below the water table (expected to be seven to eight feet below grade). Dewatering for this site will utilize a pumping system, settling tanks, possibly a treatment system prior to discharge into the city sewer system. All required permits will be obtained from NYCDEP prior to any discharge of groundwater into the sewer system.

Equipment and Material Staging

Equipment and materials will be stored and staged in a manner that complies with applicable laws and regulations.

Stabilized Construction Entrance

Steps will be taken to ensure that trucks departing the site will not track soil, fill or debris off-Site. Such actions may include use of cleaned asphalt or concrete pads or use of stone or other aggregate-based egress paths between the truck inspection station and the property exit. Measures will be taken to ensure that adjacent roadways will be kept clean of project related soils, fill and debris.

Truck Inspection Station

An outbound-truck inspection station will be set up close to the Site exit. Before exiting the Site, trucks will be required to stop at the truck inspection station and will be examined for evidence of contaminated soil on the undercarriage, body, and wheels. Soil and debris will be removed. Brooms, shovels and clean water will be utilized for the removal of soil from vehicles and equipment, as necessary.

Extreme Storm Preparedness and Response Contingency Plan

Damage from flooding or storm surge can include dislocation of soil and stockpiled materials, dislocation of site structures and construction materials and equipment, and dislocation of support of excavation structures. Damage from wind during an extreme storm event can create unsafe or unstable structures, damage safety structures and cause downed power lines creating dangerous site conditions and loss of power. In the event of emergency conditions caused by an extreme storm event, the enrollee will undertake the following steps for site preparedness prior to the event and response after the event.

Storm Preparedness

Preparations in advance of an extreme storm event will include the following: containerized hazardous materials and fuels will be removed from the property; loose materials will be secured to prevent dislocation and blowing by wind or water; heavy equipment such as excavators and generators will be removed from excavated areas, trenches and depressions on the property to high ground or removed from the property; an inventory of the property with photographs will be performed to establish conditions for the site and equipment prior to the event; stockpile covers for soil and fill will be secured by adding weights such as sandbags for added security and worn or ripped stockpile covers will be replaced with competent covers; stockpiled hazardous wastes will be removed from the property; storm water management systems will be inspected and fortified, including, as necessary: clean and reposition silt fences, hay bales; clean storm sewer filters and traps; and secure and protect pumps and hosing.

Storm Response

At the conclusion of an extreme storm event, as soon as it is safe to access the property, a complete inspection of the property will be performed. A site inspection report will be submitted to OER at the completion of site inspection and after the site security is assessed. Site conditions will be compared to the inventory of site conditions and material performed prior to the storm event and significant differences will be noted. Damage from storm conditions that result in acute public safety threats, such as downed power lines or imminent collapse of buildings, structures or equipment will be reported to public safety authorities via appropriate means such as calling 911. Petroleum spills will be reported to NYS DEC within 2 hours of identification

and consistent with State regulations. Emergency and spill conditions will also be reported to OER. Public safety structures, such as construction security fences will be repaired promptly to eliminate public safety threats. Debris will be collected and removed. Dewatering will be performed in compliance with existing laws and regulations and consistent with emergency notifications, if any, from proper authorities. Eroded areas of soil including unsafe slopes will be stabilized and fortified. Dislocated materials will be collected and appropriately managed. Support of excavation structure will be inspected and fortified as necessary. Impacted stockpiles will be contained and damaged stockpile covers will be replaced. Storm water control systems and structures will be inspected and maintained as necessary. If soil or fill materials are discharged off site to adjacent properties, property owners and OER will be notified and corrective measure plan designed to remove and clean dislocated material will be submitted to OER and implemented following approval by OER and granting of site access by the property owner. Impacted offsite areas may require characterization based on site conditions, at the discretion of OER. If onsite petroleum spills are identified, a qualified environmental professional will determine the nature and extent of the spill and report to NYS DEC's spill hotline at DEC 800-457-7362 within statutory defined timelines. If the source of the spill is ongoing and can be identified, it should be stopped if this can be done safely. Potential hazards will be addressed immediately, consistent with guidance issued by NYS DEC.

Storm Response Reporting

A site inspection report will be submitted to OER at the completion of site inspection. An inspection report established by OER is available on OER's website (www.nyc.gov/oer) and will be used for this purpose. Site conditions will be compared to the inventory of site conditions and material performed prior to the storm event and significant differences will be noted. The site inspection report will be sent to the OER project manager and will include the site name, address, tax block and lot, site primary and alternate contact name and phone number. Damage and soil release assessment will include: whether the project had stockpiles; whether stockpiles were damaged; photographs of damage and notice of plan for repair; report of whether soil from the site was dislocated and whether any of the soil left the site; estimates of the volume of soil that left the site, nature of impact, and photographs; description of erosion damage; description of equipment damage; description of damage to the remedial program or the construction

program, such as damage to the support of excavation; presence of onsite or offsite exposure pathways caused by the storm; presence of petroleum or other spills and status of spill reporting to NYS DEC; description of corrective actions; schedule for corrective actions. This report should be completed and submitted to OER project manager with photographs within 24 hours of the time of safe entry to the property after the storm event.

5.8 Traffic Control

Drivers of trucks leaving the Site with soil/fill will be instructed to proceed without stopping in the vicinity of the Site to prevent neighborhood impacts. The planned route on local roads for trucks leaving the site is shown on Figure 9.

5.9 Demobilization

Demobilization will include:

- As necessary, restoration of temporary access areas and areas that may have been disturbed to accommodate support areas (e.g., staging areas, decontamination areas, storage areas, temporary water management areas, and access area);
- Removal of sediment from erosion control measures and truck wash and disposal of materials in accordance with applicable laws and regulations;
- Equipment decontamination, and;
- General refuse disposal.

Equipment will be decontaminated and demobilized at the completion of all field activities. Investigation equipment and large equipment (e.g., soil excavators) will be washed at the truck inspection station as necessary. In addition, all investigation and remediation derived waste will be appropriately disposed.

5.10 Reporting and Record Keeping

Daily reports

Daily reports providing a general summary of activities for each day of active remedial work will be emailed to the OER Project Manager by the end of the following business day. Those reports will include:

- Project number and statement of the activities and an update of progress made and locations of excavation and other remedial work performed;
- Quantities of material imported and exported from the Site;
- Status of on-Site soil/fill stockpiles;
- A summary of all citizen complaints, with relevant details (basis of complaint; actions taken; etc.);
- A summary of CAMP results noting all excursions. CAMP data may be reported;
- Photograph of notable Site conditions and activities.

The frequency of the reporting period may be revised in consultation with OER project manager based on planned project tasks. Daily email reports are not intended to be the primary mode of communication for notification to OER of emergencies (accidents, spills), requests for changes to the RAWP or other sensitive or time critical information. However, such information will be included in the daily reports. Emergency conditions and changes to the RAWP will be communicated directly to the OER project manager by personal communication. Daily reports will be included as an Appendix in the Remedial Action Report.

Record Keeping and Photo Documentation

Job-site record keeping for all remedial work will be performed. These records will be maintained on-Site during the project and will be available for inspection by OER staff. Representative photographs will be taken of the Site prior to any remedial activities and during major remedial activities to illustrate remedial program elements and contaminant source areas. Photographs will be submitted at the completion of the project in the RAR in digital format (i.e. jpeg files).

5.11 Complaint Management

All complaints from citizens will be promptly reported to OER. Complaints will be addressed and outcomes will also be reported to OER in daily reports. Notices to OER will include the nature of the complaint, the party providing the complaint, and the actions taken to resolve any problems.

5.12 Deviations from The Remedial Action Work Plan

All changes to the RAWP will be reported to, and approved by, the OER Project Manager and will be documented in daily reports and reported in the Remedial Action Report. The process to be followed if there are any deviations from the RAWP will include a request for approval for the change from OER noting the following:

- Reasons for deviating from the approved RAWP;
- Effect of the deviations on overall remedy; and
- Determination with basis that the remedial action with the deviation(s) is protective of public health and the environment.

6.0 Remedial Action Report

A Remedial Action Report (RAR) will be submitted to OER following implementation of the remedial action defined in this RAWP. The RAR will document that the remedial work required under this RAWP has been completed and has been performed in compliance with this plan. The RAR will include:

- Information required by this RAWP;
- Text description with thorough detail of all engineering and institutional controls (if Track 1 remedial action is not achieved)
- As-built drawings for all constructed remedial elements;
- Manifests for al soil or fill disposal;
- Photographic documentation of remedial work performed under this remedy;
- Site Management Plan (if Track 1 remedial action is not achieved);
- Description of any changes in the remedial action from the elements provided in this RAWP and associated design documents;
- Tabular summary of all end point sampling results (including all soil test results from the remedial investigation for soil that will remain on site) and all soil/fill waste characterization results, QA/QC results for end-point sampling, and other sampling and chemical analysis performed as part of the remedial action;
- Test results or other evidence demonstrating that remedial systems are functioning properly;

- Account of the source area locations and characteristics of all soil or fill material removed from the Site including a map showing the location of these excavations and hotspots, tanks or other contaminant source areas;
- Full accounting of the disposal destination of all contaminated material removed from the Site. Documentation associated with disposal of all material will include transportation and disposal records, and letters approving receipt of the material;
- Account of the origin and required chemical quality testing for material imported onto the Site;
- Continue registration of the property with an E-Designation by the NYC Department of Buildings (if Track 1 remedial action is not achieved);
- The RAWP and Remedial Investigation Report will be included as appendices to the RAR;
- Reports and supporting material will be submitted in digital form and final PDF's will include bookmarks for each appendix.

Remedial Action Report Certification

I, Shaik A. Saad, am currently a registered professional engineer licensed by the State of New York. I performed professional engineering services and had primary direct responsibility for implementation of the remedial program for the 221 – 227 East 138th Street site, site number VCP 16CVCP011X. I certify to the following:

- I have reviewed this document, to which my signature and seal are affixed.
- Engineering Controls implemented during this remedial action were designed by me or a person under my direct supervision and achieve the goals established in the Remedial Action Work Plan for this site.
- The Engineering Controls constructed during this remedial action were professionally observed by me or by a person under my direct supervision and (1) are consistent with the Engineering Control design established in the Remedial action Work Plan and (2) are accurately reflected in the text and drawings for as-built design reported in this Remedial Action Report.
- The OER-approved Remedial Action Work Plan dated September 18, 2015 and Stipulations in a letter dated September 30, 2015 were implemented and that all requirements in those documents have been substantively complied with. I certify that contaminated soil, fill, liquids or other material from the property were taken to facilities licensed to accept this material in full compliance with applicable laws and regulations.

Name

PE License Number

Signature

Date

PE Stamp

I, Mark E. Robbins, am a Qualified Environmental Professional. I had primary direct responsibility for implementation of the remedial program for the 221 – 227 East 138th Street site, site number VCP 16CVCP011X. I certify to the following:

- The OER-approved Remedial Action Work Plan dated September 18, 2015 and Stipulations in a letter dated September 30, 2015 were implemented and that all requirements in those documents have been substantively complied with. I certify that contaminated soil, fill, liquids or other material from the property were taken to facilities licensed to accept this material in full compliance with applicable laws and regulations.

QEP Name

QEP Signature

Date

7.0 Schedule

The table below presents a schedule for the proposed remedial action and reporting. If the schedule for remediation and development activities changes, it will be updated and submitted to OER. Currently, an 8-month remediation period is anticipated.

Schedule Milestone	**Weeks from Remedial Action Start**	**Duration (weeks)**
OER Approval of RAWP	0	--
Fact Sheet 2 announcing start of remedy	0	--
Mobilization	4	1
Remedial Excavation	6	4
Demobilization	36	30
Submit Remedial Action Report	40	3

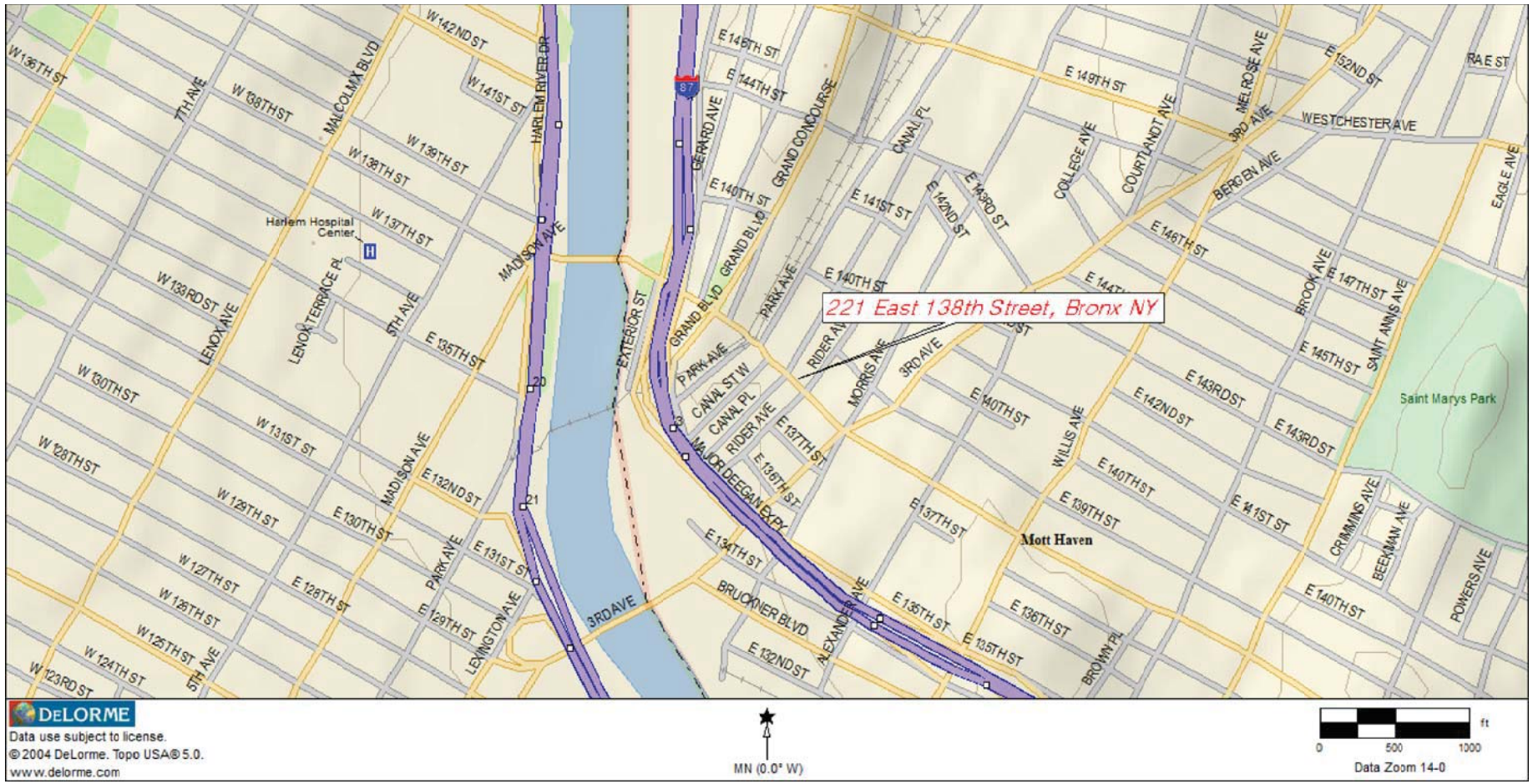

HYDRO TECH ENVIRONMENTAL CORP.

MAIN OFFICE:
77 ARKAY DRIVE, SUITE G
HAUPPAUGE, NEW YORK 11788
T (631)462-5866 F (631)462-5877

NYC OFFICE:
15 OCEAN AVENUE, 2nd Floor
BROOKLYN, NEW YORK 11225
T (718)636-0800 F (718)636-0900

www.hydrotechenvironmental.com

221-227 E. 138th Street
Bronx,NY.
HTE Job # 150028

Drawn By: C.Q.
Reviewed By: M.V.
Approved By: M.R
Date: 09/10/15
Scale: AS NOTED

TITLE:

FIGURE 1: SITE LOCATION MAP

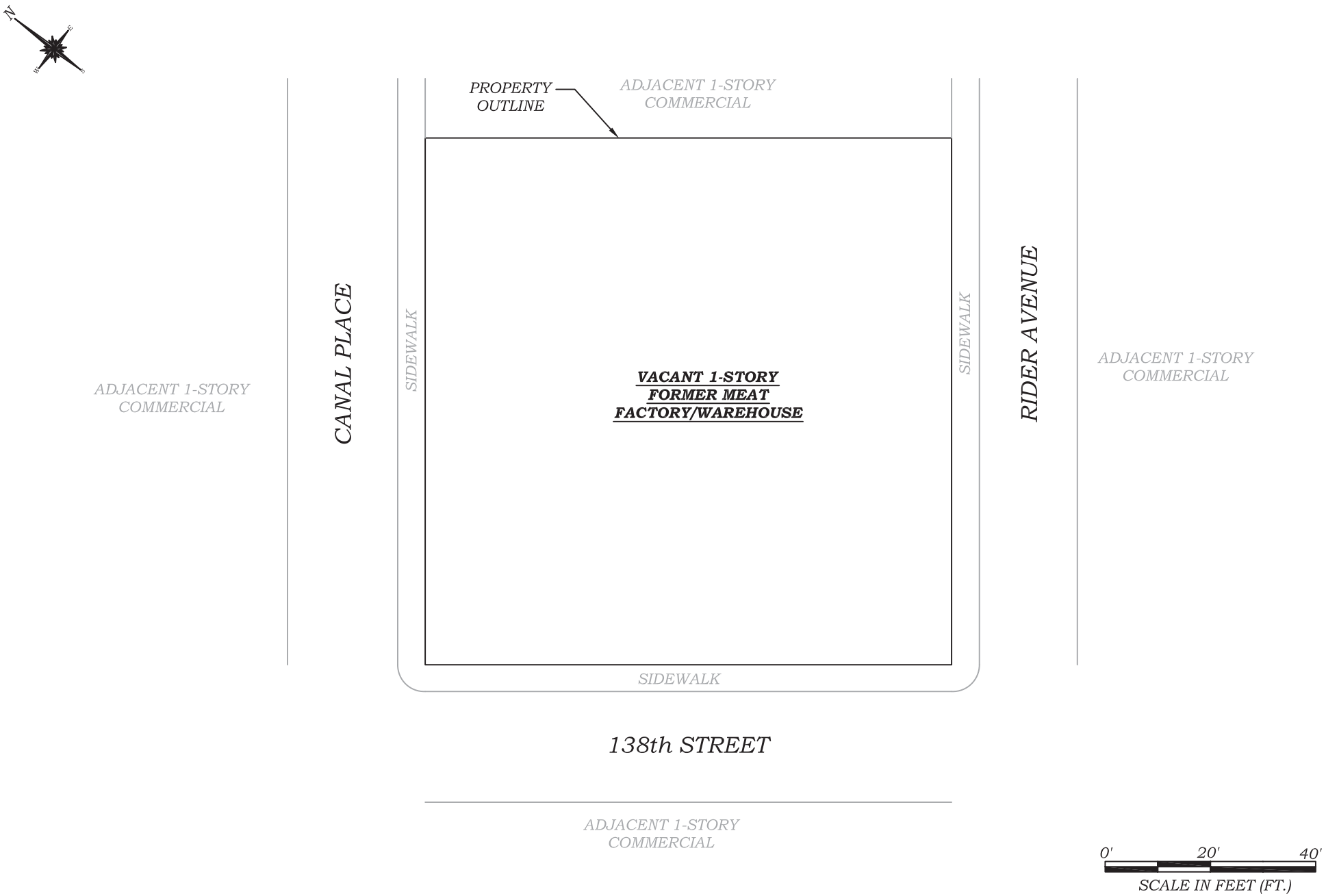

HYDRO TECH ENVIRONMENTAL CORP.

MAIN OFFICE:
77 ARKAY DRIVE, SUITE G
HAUPPAUGE, NEW YORK 11788
T (631)462-5866 F (631)462-5877

NYC OFFICE:
15 OCEAN AVENUE, 2nd Floor
BROOKLYN, NEW YORK 11225
T (718)636-0800 F (718)636-0900

www.hydrotechenvironmental.com

221-227 E. 138th Street
Bronx, NY.
HTE Job # 150028

Drawn By: C.Q.
Reviewed By: M.V
Approved By: M.R
Date: 09/10/15
Scale: AS NOTED

TITLE:

FIGURE 2: SITE BOUNDARY MAP

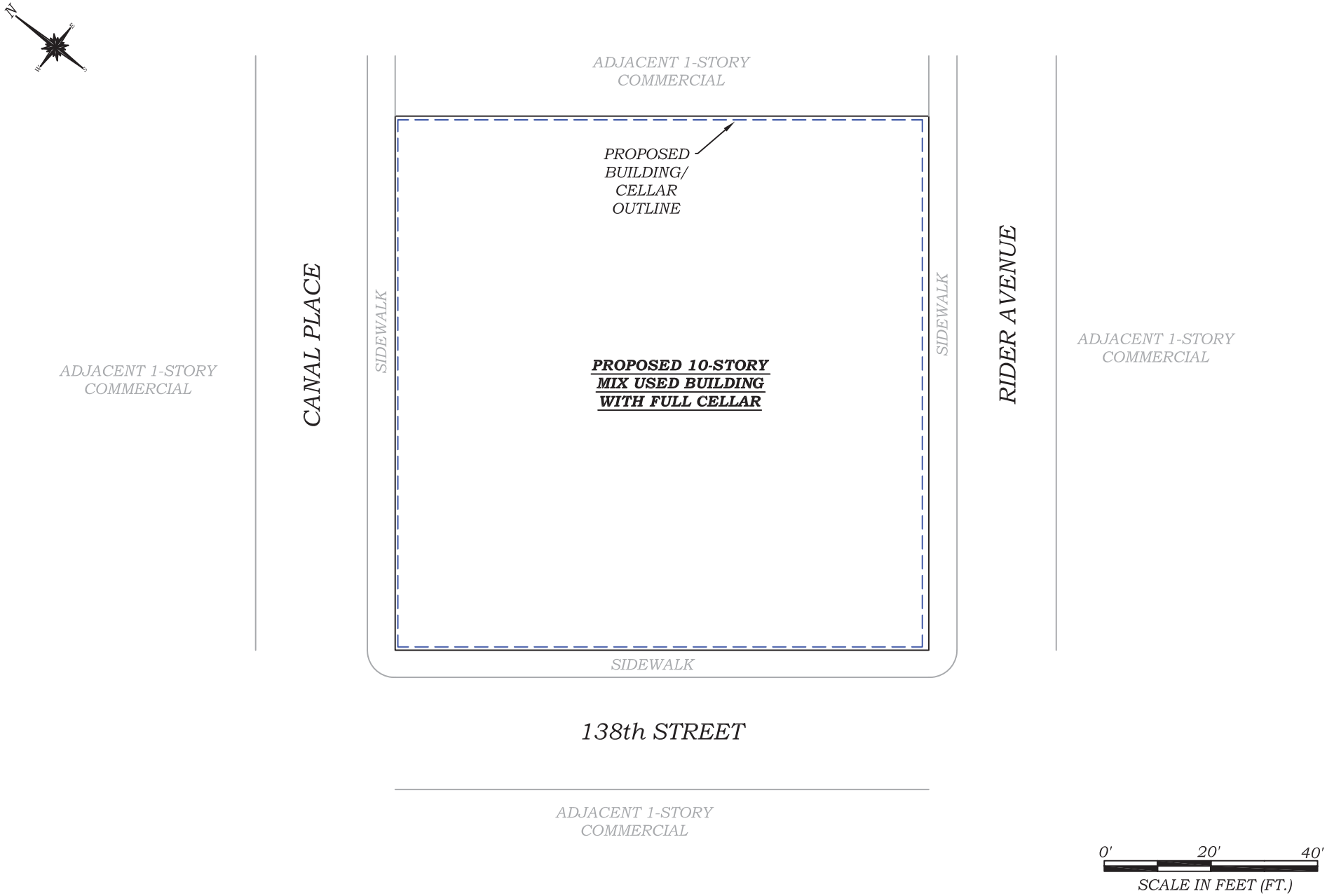

HYDRO TECH ENVIRONMENTAL CORP.

MAIN OFFICE:
77 ARKAY DRIVE, SUITE G
HAUPPAUGE, NEW YORK 11788
T (631)462-5866 F (631)462-5877

NYC OFFICE:
15 OCEAN AVENUE, 2nd Floor
BROOKLYN, NEW YORK 11225
T (718)636-0800 F (718)636-0900

www.hydrotechenvironmental.com

221-227 E. 138th Street
Bronx, NY.
HTE Job # 150028

Drawn By: C.Q.
Reviewed By: M.V
Approved By: M.R
Date: 09/10/15
Scale: AS NOTED

TITLE:

FIGURE 3: PROPOSED REDEVELOPMENT

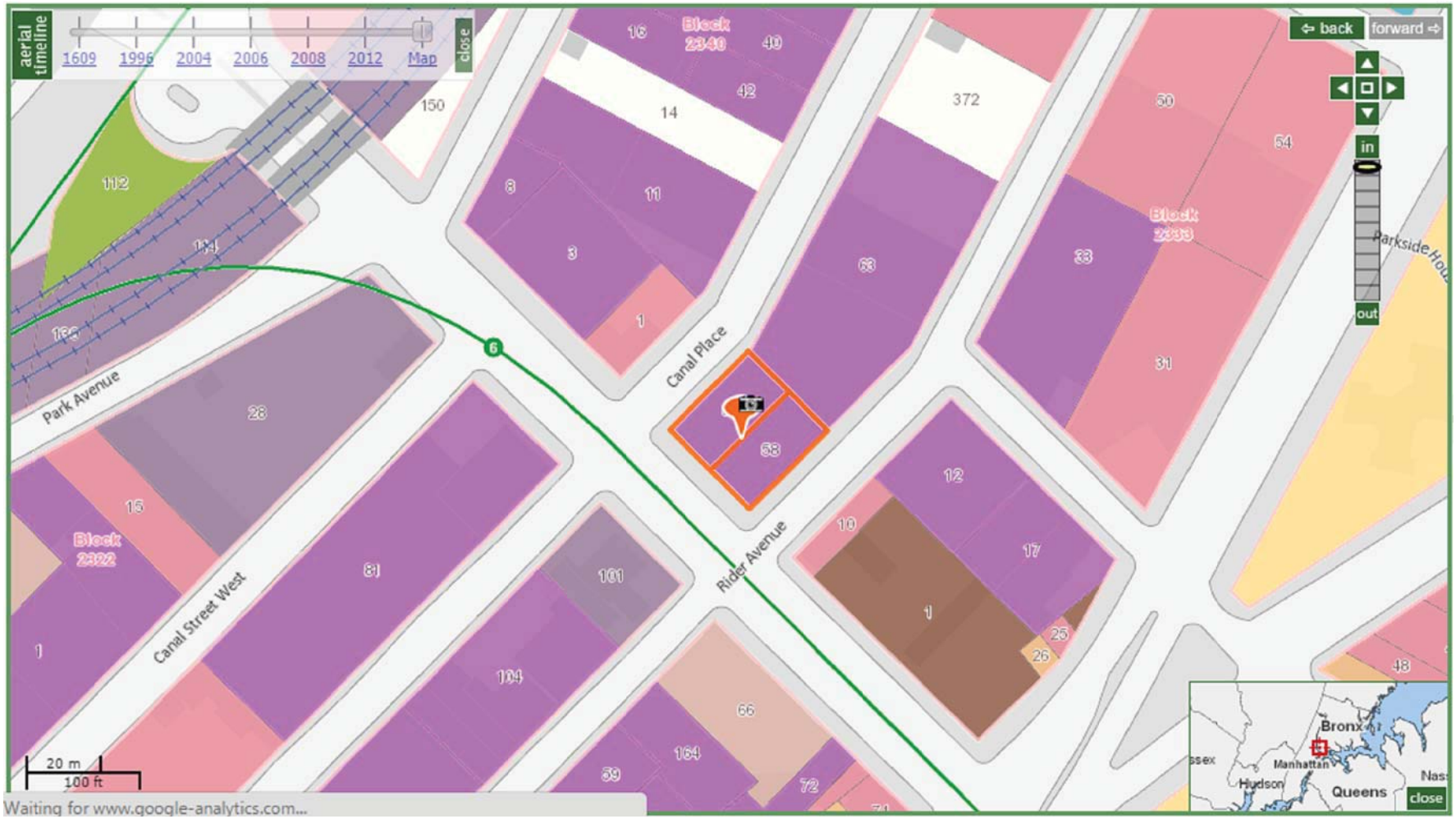

Land Use

All land use categories

2003 2005 2007 2009 2014

- 1 & 2 Family Residential
- Multi-family Residential
- Mixed Use
- Open space & outdoor recreation
- Commercial
- Institutions
- Industrial
- Parking
- Transportation / Utilities
- Vacant Lots

HYDRO TECH ENVIRONMENTAL CORP.

MAIN OFFICE:
77 ARKAY DRIVE, SUITE G
HAUPPAUGE, NEW YORK 11788
T (631)462-5866 F (631)462-5877

NYC OFFICE:
15 OCEAN AVENUE, 2nd Floor
BROOKLYN, NEW YORK 11225
T (718)636-0800 F (718)636-0900

www.hydrotechenvironmental.com

221-227 E. 138th Street
Bronx,NY.
HTE Job # 150028

Drawn By: C.Q.
Reviewed By: M.V
Approved By: M.R
Date: 09/10/15
Scale: AS NOTED

TITLE:

FIGURE 4: LAND-USE MAP

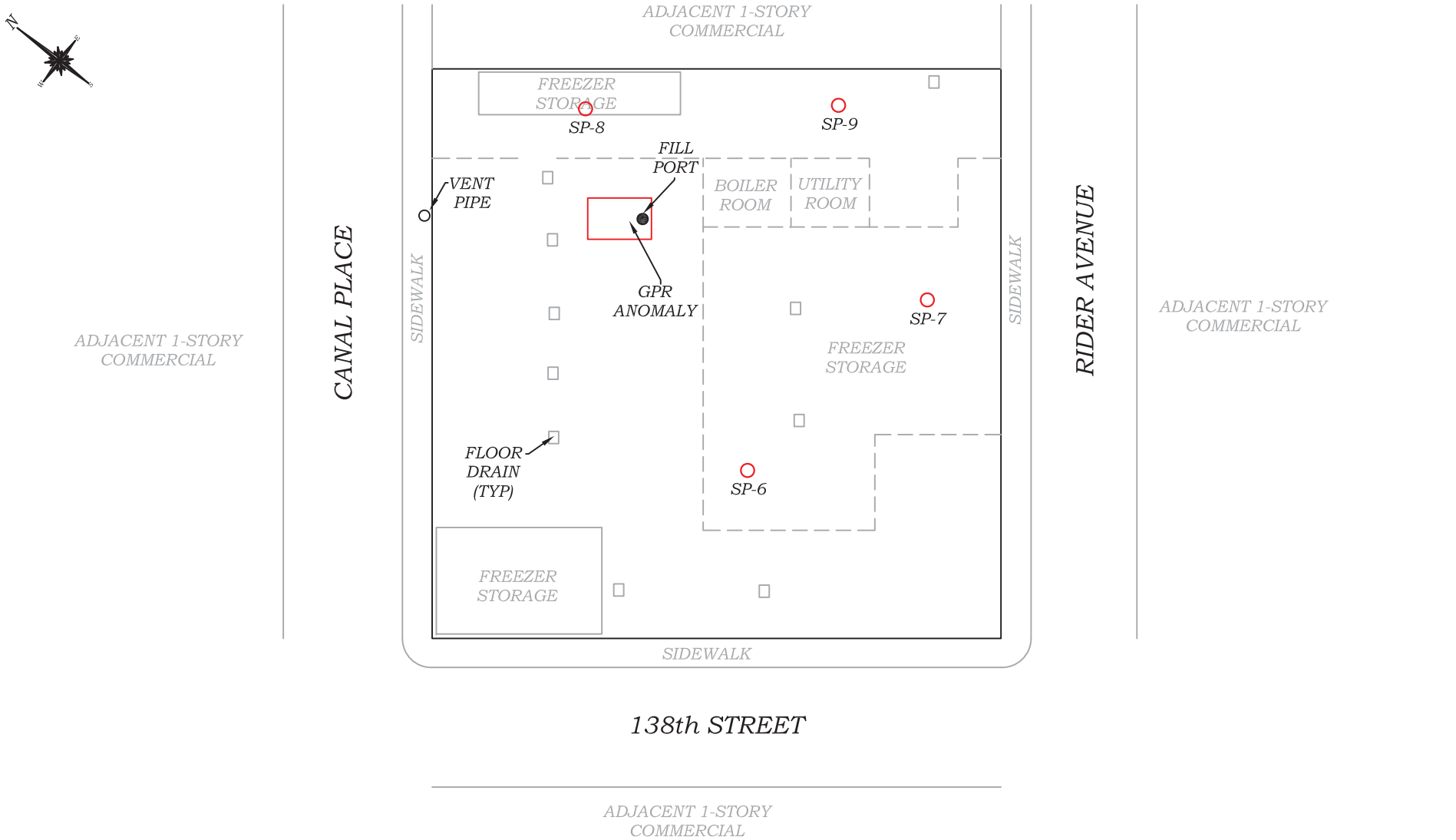

LEGEND:

○ PROPOSED SOIL PROBE LOCATIONS (SP)

0' 20' 40'

SCALE IN FEET (FT.)

HYDRO TECH ENVIRONMENTAL CORP.

MAIN OFFICE:
77 ARKAY DRIVE, SUITE G
HAUPPAUGE, NEW YORK 11788
T (631)462-5866 F (631)462-5877

NYC OFFICE:
15 OCEAN AVENUE, 2nd Floor
BROOKLYN, NEW YORK 11225
T (718)636-0800 F (718)636-0900

www.hydrotechenvironmental.com

221-227 E. 138th Street
Bronx, NY.
HTE Job # 150028

Drawn By: C.Q.
Reviewed By: M.V
Approved By: M.R
Date: 09/10/15
Scale: AS NOTED

TITLE:

FIGURE 5: POST-DEMOLITION SOIL PROBE LOCATIONS

LEGEND:

AREA TO BE EXCAVATED TO 10 FEET BELOW GRADE

AREA TO BE EXCAVATED TO 15 FEET BELOW GRADE

0' 20' 40'

SCALE IN FEET (FT.)

HYDRO TECH ENVIRONMENTAL CORP.

MAIN OFFICE:
77 ARKAY DRIVE, SUITE G
HAUPPAUGE, NEW YORK 11788
T (631)462-5866 F (631)462-5877

NYC OFFICE:
15 OCEAN AVENUE, 2nd Floor
BROOKLYN, NEW YORK 11225
T (718)636-0800 F (718)636-0900

www.hydrotechenvironmental.com

221-227 E. 138th Street
Bronx, NY.
HTE Job # 150028

Drawn By: C.Q.
Reviewed By: M.V
Approved By: M.R
Date: 09/13/15
Scale: AS NOTED

TITLE:

FIGURE 6: SITE EXCAVATION DIAGRAM

LEGEND:

- ● PROPOSED END POINT HOT SPOTS SAMPLING LOCATIONS (EP)
- ○ PROPOSED END POINT CONFIRMATION SAMPLING LOCATIONS (EP)

0' 20' 40'
SCALE IN FEET (FT.)

HYDRO TECH ENVIRONMENTAL CORP.

MAIN OFFICE:
77 ARKAY DRIVE, SUITE G
HAUPPAUGE, NEW YORK 11788
T (631)462-5866 F (631)462-5877

NYC OFFICE:
15 OCEAN AVENUE, 2nd Floor
BROOKLYN, NEW YORK 11225
T (718)636-0800 F (718)636-0900

www.hydrotechenvironmental.com

221-227 E. 138th Street
Bronx, NY.
HTE Job # 150028

Drawn By: C.Q.
Reviewed By: M.V
Approved By: M.R
Date: 09/13/15
Scale: AS NOTED

TITLE:

FIGURE 7: PROPOSED HOTSPOT AND CONFIRMATION ENDPOINT SAMPLING LOCATIONS

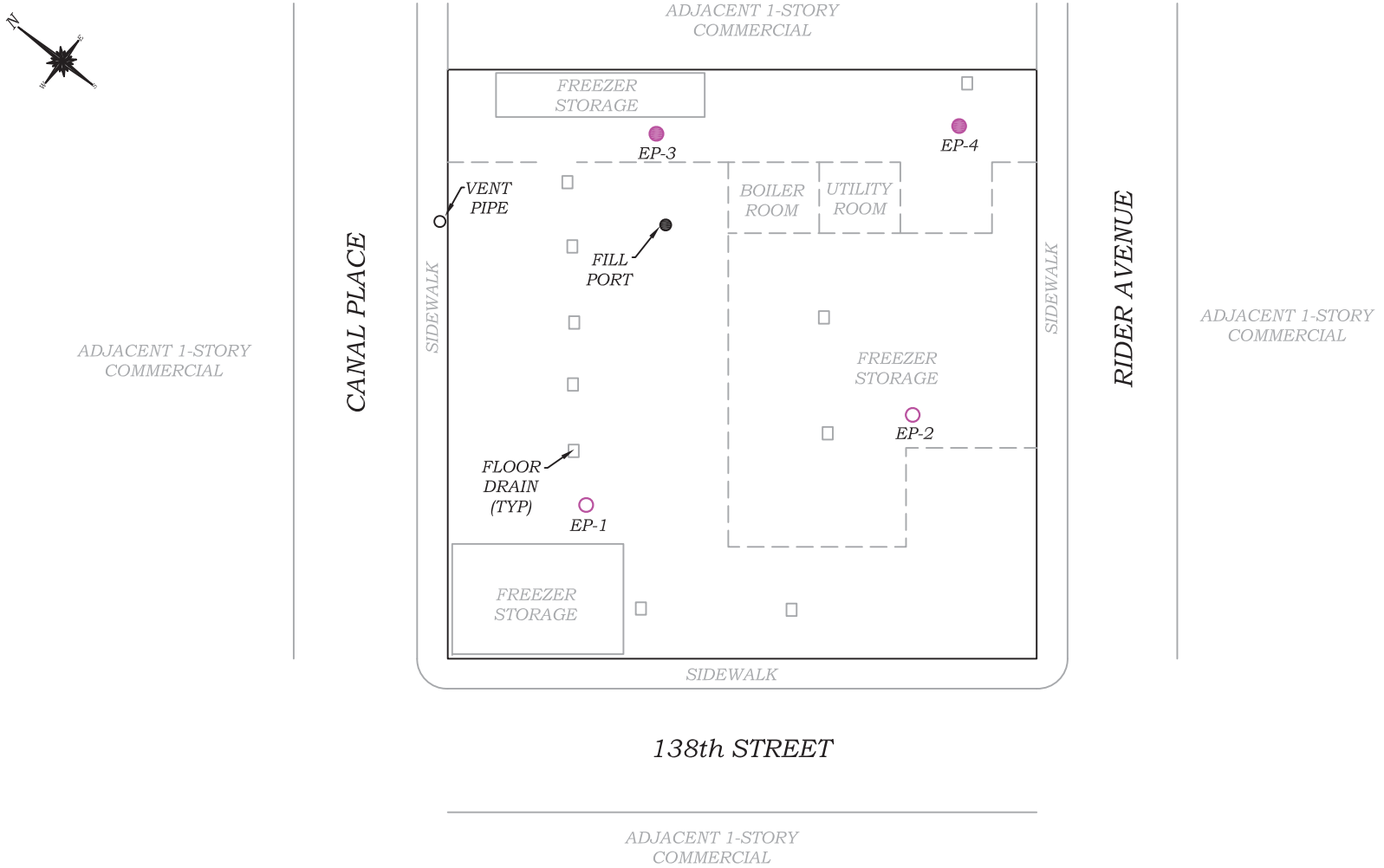

LEGEND:

- PROPOSED END POINT HOT SPOTS SAMPLING LOCATIONS (EP)
- PROPOSED END POINT CONFIRMATION SAMPLING LOCATIONS (EP)

0' 20' 40'
SCALE IN FEET (FT.)

HYDRO TECH ENVIRONMENTAL CORP.

MAIN OFFICE:
77 ARKAY DRIVE, SUITE G
HAUPPAUGE, NEW YORK 11788
T (631)462-5866 F (631)462-5877

NYC OFFICE:
15 OCEAN AVENUE, 2nd Floor
BROOKLYN, NEW YORK 11225
T (718)636-0800 F (718)636-0900

www.hydrotechenvironmental.com

221-227 E. 138th Street
Bronx, NY.
HTE Job # 150028

Drawn By: C.Q.
Reviewed By: M.V
Approved By: M.R
Date: 09/13/15
Scale: AS NOTED

TITLE:

FIGURE 7: PROPOSED HOTSPOT AND CONFIRMATION ENDPOINT SAMPLING LOCATIONS

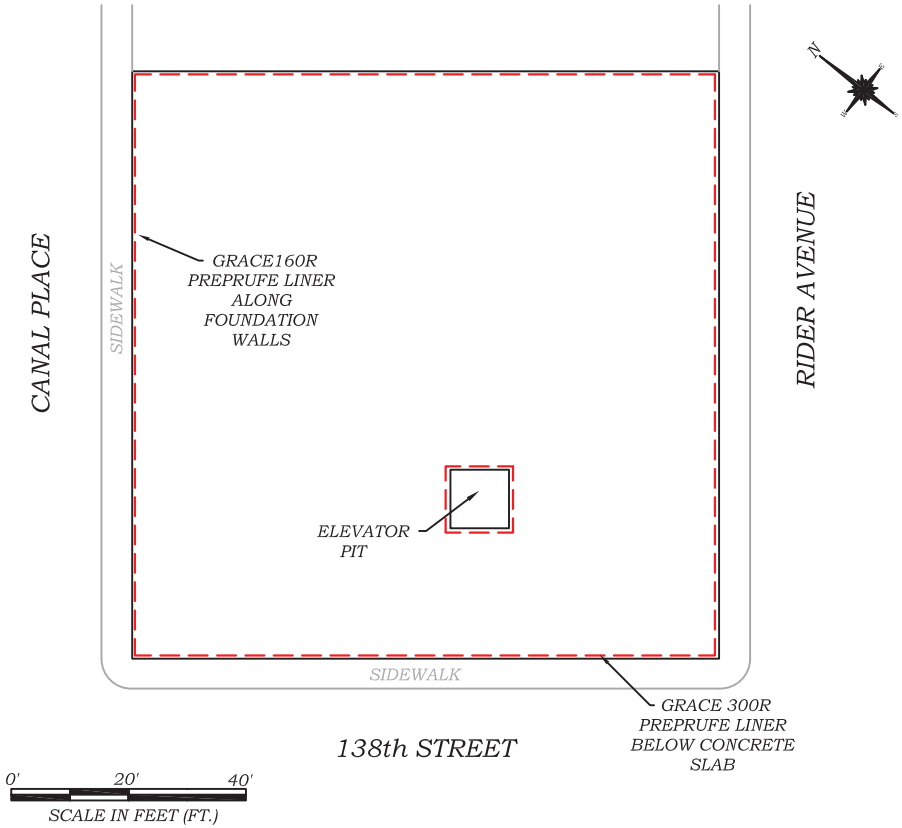

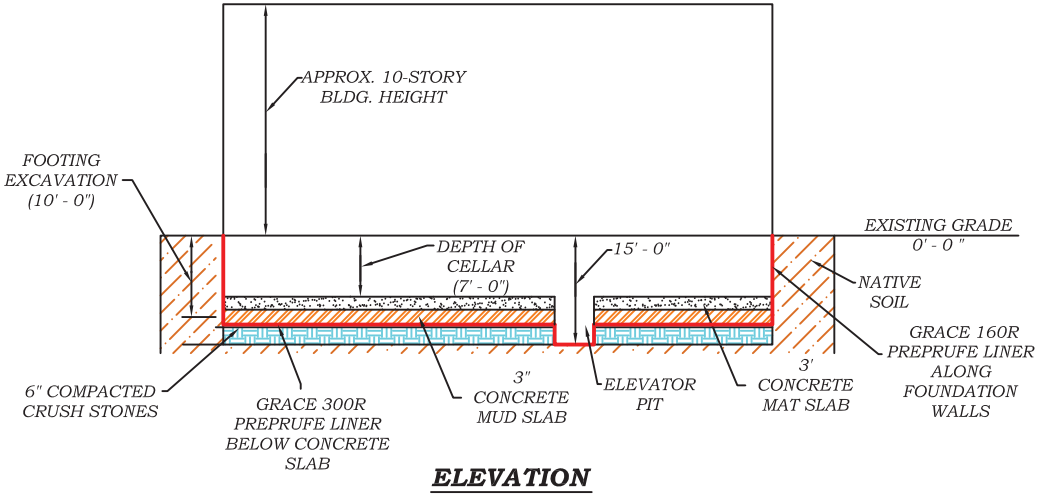

ELEVATION

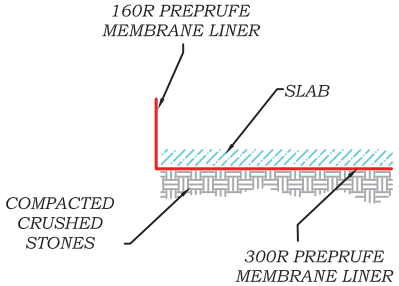

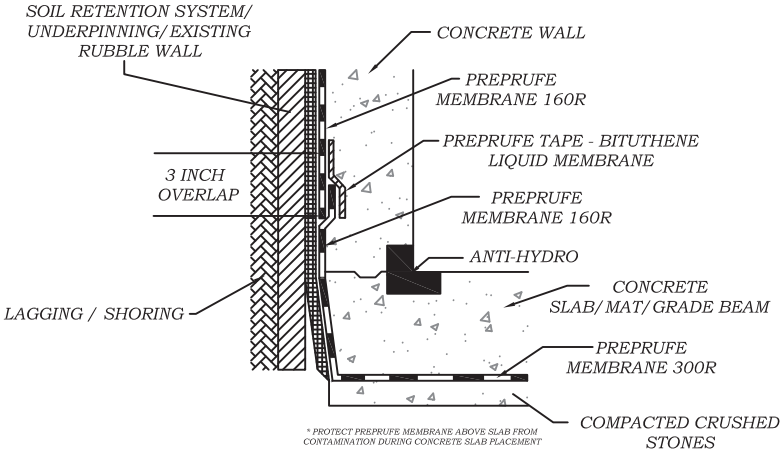

WALL/SLAB DETAIL

NOTES:

1. ALL ELEVATIONS ARE RELATIVE TO EXISTING GRADE, WHICH IS ARBITRARILY ASSUMED TO BE AT 0'-0" EL.
2. THE VAPOR BARRIER DESIGN IS INDEPENDENT OF THE ACTUAL TYPE OF FOUNDATION CONSTRUCTED AT THE SITE. ANY OBJECTS THAT BISECT THE LINER SUCH AS PIERS OR PILES MUST BE CUT THROUGH THE LINER AND CONTACT BETWEEN THE BARRIER AND OBJECT MUST BE SEALED AS PER THE MANUFACTURER'S RECOMMENDATION.
3. BUILDING HEIGHT AND THE SHAPE OF THE ROOF ARE APPROXIMATE.

HYDRO TECH ENVIRONMENTAL CORP.

MAIN OFFICE:
77 ARKAY DRIVE, SUITE G
HAUPPAUGE, NEW YORK 11788
T (631)462-5866 F (631)462-5877

NYC OFFICE:
15 OCEAN AVENUE, 2nd Floor
BROOKLYN, NEW YORK 11225
T (718)636-0800 F (718)636-0900

www.hydrotechenvironmental.com

221-227 E. 138th Street
Bronx, NY.
HTE Job # 150028

Drawn By: C.Q.
Reviewed By: M.V
Approved By: M.R
Date: 09/13/15
Scale: AS NOTED

TITLE:

FIGURE 8A: PLAN & ELEVATION OF VAPOR BARRIER DESIGN PLAN

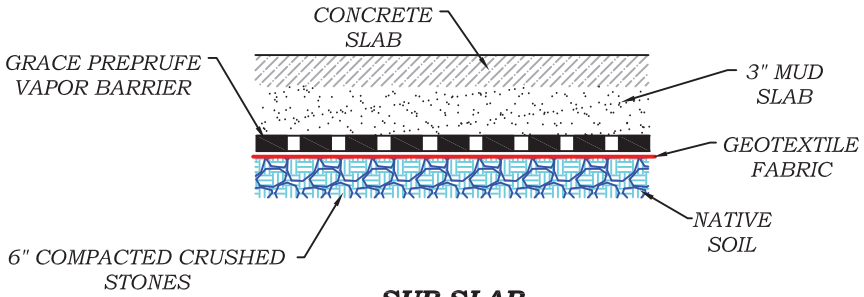

SUB-SLAB SECTION DETAIL

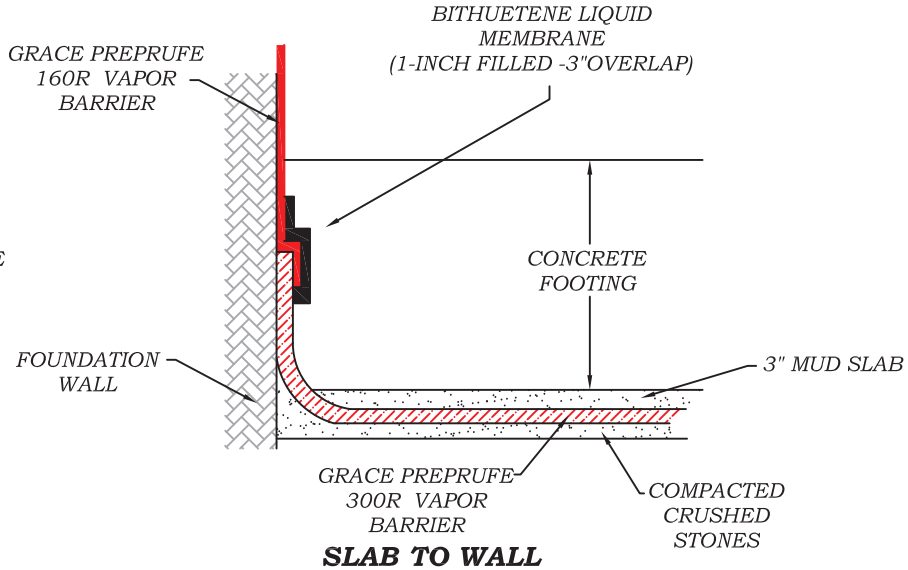

SLAB TO WALL SECTION DETAIL

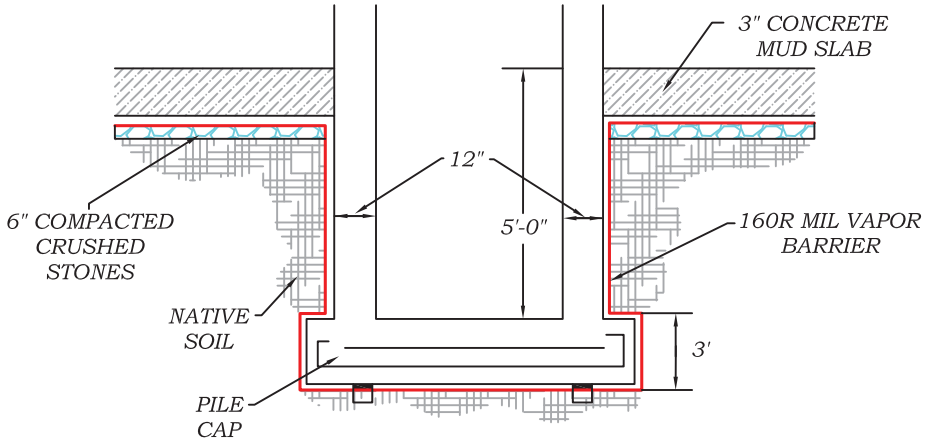

SECTION DETAILS - ELEVATOR PIT

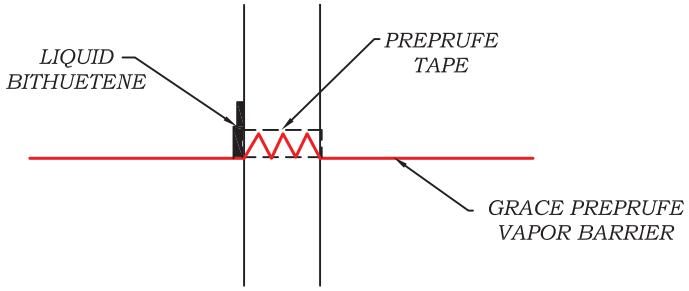

SECTION DETAIL PIPE PENETRATIONS

HYDRO TECH ENVIRONMENTAL CORP.

MAIN OFFICE:
77 ARKAY DRIVE, SUITE G
HAUPPAUGE, NEW YORK 11788
T (631)462-5866 F (631)462-5877

NYC OFFICE:
15 OCEAN AVENUE, 2nd Floor
BROOKLYN, NEW YORK 11225
T (718)636-0800 F (718)636-0900

www.hydrotechenvironmental.com

221-227 E. 138th Street
Bronx, NY.
HTE Job # 150028

Drawn By: C.Q.
Reviewed By: M.V
Approved By: M.R
Date: 09/13/15
Scale: AS NOTED

TITLE:

FIGURE 8B: CROSS SECTION VIEW DETAILS

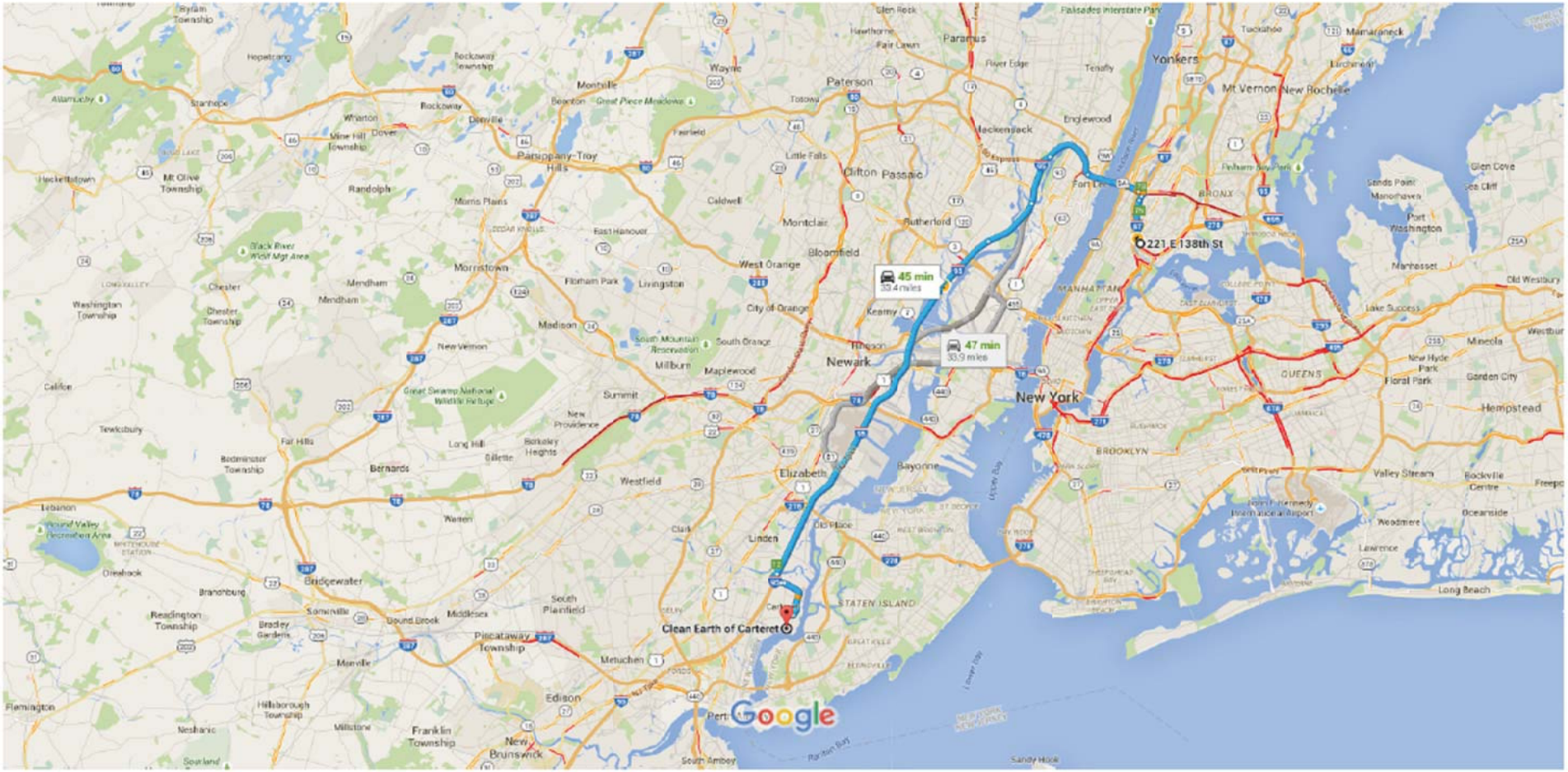

Map data ©2015 Google 2 mi

221 E 138th St

Bronx, NY 10451

HYDRO TECH ENVIRONMENTAL CORP.

MAIN OFFICE:
77 ARKAY DRIVE, SUITE G
HAUPPAUGE, NEW YORK 11788
T (631)462-5866 F (631)462-5877

NYC OFFICE:
15 OCEAN AVENUE, 2nd Floor
BROOKLYN, NEW YORK 11225
T (718)636-0800 F (718)636-0900

www.hydrotechenvironmental.com

221-227 E. 138th Street
Bronx, NY.
HTE Job # 150028

Drawn By: C.Q.
Reviewed By: M.V
Approved By: M.R
Date: 09/13/15
Scale: AS NOTED

TITLE:

FIGURE 9: TRUCK ROUTE

APPENDIX 1

PROPOSED DEVELOPMENT PLANS

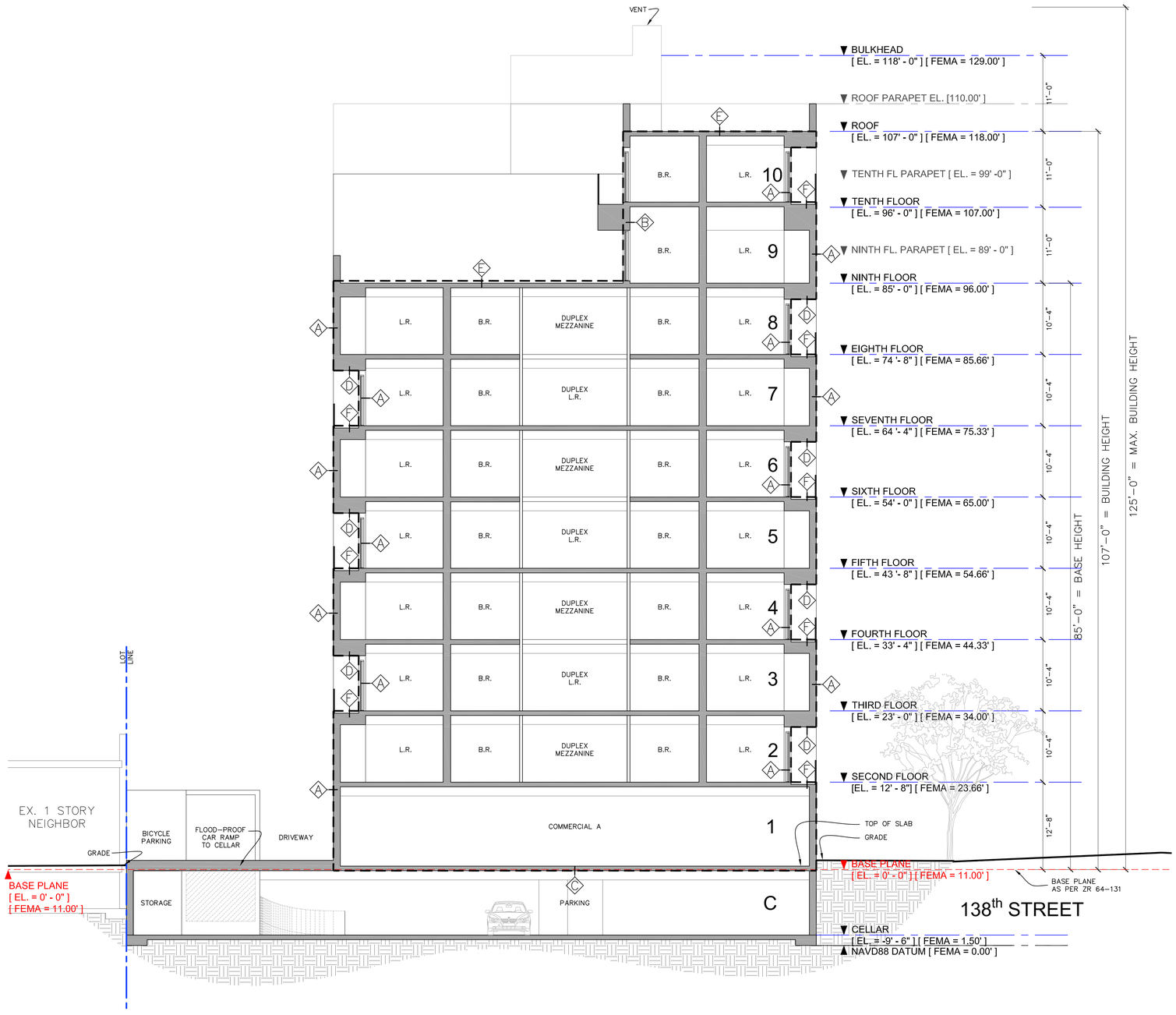

1 BUILDING SECTION – TRANSVERSE

SCALE: 1/8" = 1'-0"

ENVELOPE LEGEND:

REFER TO DRAWING A-600 FOR DETAILS

LINE OF EXTERIOR ENVELOPE

(A) **EXTERIOR WALLS 1** (COMMERICIAL) **AND 2** (RESIDENTIAL):
STEEL FRAME 16" O.C.
CAVITY INSULATION R = 32
CONTINUOUS INSULATION R = 12.5

(B) **EXTERIOR WALL 3:** METAL BUILDING WALL SINGLE LAYER MINERAL FIBER (RESIDENTIAL) @ BALCONIES ONLY:
CAVITY INSULATION R = 13
CONTINUOUS INSULATION R = –

(C) **FLOOR 2** STEEL JOIST (COMMERCIAL):
CAVITY INSULATION R = 32
CONTINUOUS INSULATION R = –

(D) **FLOOR 3** STEEL JOIST (RESIDENTIAL):
CAVITY INSULATION R = 32
CONTINUOUS INSULATION R = 12.5

(E) **ROOF 1** INSULATION ENTIRELY ABOVE DECK (RESIDENTIAL) @ MAIN ROOF:
CAVITY INSULATION R = –
CONTINUOUS INSULATION R = 25

(F) **ROOF 2** INSULATION ENTIRELY ABOVE DECK (RESIDENTIAL) @ TERRACES ONLY:
CAVITY INSULATION R = –
CONTINUOUS INSULATION R = 15

ENERGY CODE NOTES - BUILDING ENVELOPE:

CELLAR SHALL BE USED SOLELY FOR PARKING, STORAGE, AND MECHANICAL PURPOSED.

THE BUILDING ENVELOPE SHALL CONTAIN A CONTINUOUS AIR BARRIER THAT IS SEALED IN AN APPROVED MANNER AND EITHER CONSTRUCTED OR TESTED IN AN APPROVED MANNER. AIR BARRIER PENETRATIONS SHALL BE SEALED IN AN APPROVED MANNER.

ALL SOURCES OF AIR LEAKAGE IN THE BUILDING THERMAL EVELOPE SHALL BE SEALED, CAULKED, GASKETED, WEATHER STRIPPED, OR WRAPPED WITH MOISTURE VAPOR-PERMEABLE WRAPPING MATERIAL TO MINIMIZE AIR LEAKAGE.

ALL EXTERIOR INSULATION SHALL BE PROTECTED FROM DAMAGE WITH A PROTECTIVE MATERIAL. VERIFICATION FOR EXPOSED FOUNDATION INSULATION MAY NEED TO OCCUR DURING FINAL INSPECTION.

ALL INSULATION SHALL BE INSTALLED PER MANUFACTURER'S INSTRUCTIONS INCLUDING ROOF, FLOOR, ABOVE-GRADE WALL, BELOW-GRADE WALL, AND SLAB EDGE.

BLOWN OR POURED LOOSE-FILL INSULATION IS INSTALLED ONLY WHERE THE ROOF SLOPE IS <= 3 IN 12.

BUILDING ENVELOPE INSULATION SHALL BE LABELED WITH R-VALUE OR INSULATION CERTIFICATE PROVIDING R-VALUE AND OTHER RELEVANT DATA.

RECESSED LUMINAIRES IN THERMAL ENVELOPE SHALL LIMIT INFILTRATION AND BE IC RATED AND LABELED. SEAL BETWEEN INTERIOR FINISH AND LUMINAIRE HOUSING.

REVISIONS		
NO.	DESCRIPTIONS	DATE
1	DOB	5-29-15

NO.	TO WHOM ISSUED	DATE
	ISSUES	

Tahoe Development Group LLC
8217 153rd Avenue
Howard Beach, NY 11414
Owner
Anthony Gurino
718 835 4700

Michael Muroff Architect, LLC
333 Hudson Street, Suite 501
New York, NY 10013
Architect
Michael Muroff
646 230 7111

Structural Engineering Systems, PLLC
214-41 42nd Avenue, Suite 2B
Bayside, NY 11361
Structural Engineer
Joseph Gulino
718 224 7161

S. Schwartz Engineering, PLLC
15 West 39th Street, Suite PH
New York, NY 10018
MEP Engineer
Simon Schwartz
212 695 3509

THIS DRAWING IS AN INSTRUMENT OF SERVICE AND SHALL REMAIN THE PROPERTY OF MICHAEL MUROFF ARCHITECT,L.L.C., WHETHER THE PROJECT FOR WHICH IT IS MADE IS EXECUTED OR NOT. THIS DRAWING SHALL NOT BE USED BY THE OWNER OR OTHERS ON OTHER PROJECTS, FOR ADDITIONS TO THIS PROJECT OR FOR COMPLETION OF THIS PROJECT BY OTHERS EXCEPT BY AGREEMENT IN WRITING WITH MICHAEL MUROFF ARCHITECT,L.L.C.. SUBMISSION OR DISTRIBUTION TO MEET OFFICIAL REGULATORY REQUIREMENTS OR FOR OTHER PURPOSES IN CONNECTION WITH THE PROJECT IS NOT TO BE CONSTRUED AS PUBLICATION IN DEROGATION OF THE RIGHTS OF MICHAEL MUROFF ARCHITECT,L.L.C.. REPRODUCTION OR PUBLICATION BY ANY METHOD IN WHOLE OR IN PART IS PROHIBITED. TITLE TO THIS DRAWING BELONGS TO MICHAEL MUROFF ARCHITECT,L.L.C. WITHOUT PREJUDICE.

THE FIRM OF MICHAEL MUROFF ARCHITECT,L.L.C. HAS NOT BEEN RETAINED TO DO FIELD SUPERVISION OR INSPECTION. THE FIRM OF MICHAEL MUROFF ARCHITECT,L.L.C. IT'S PRINCIPLES, EMPLOYEES, AND CONSULTANTS HAVE NOT BEEN RETAINED TO PROVIDE ANY SERVICES RELATED TO ASBESTOS, TOXIC WASTE, OR HAZARDOUS MATERIALS, THEIR REMOVAL, ABATEMENTS, OR ENCAPSULATING. MICHAEL MUROFF ARCHITECT,L.L.C. ET AL. DO NOT SPECIFY OR MAKE RECOMMENDATIONS RELATED TO ASBESTOS IN ANY FORM. MICHAEL MUROFF ARCHITECT,L.L.C. ET AL. DO NOT ENTER INTO ANY ASBESTOS CONTAMINATED AREAS. IF ASBESTOS IS FOUND ASBESTOS CONTAMINANT OR REMOVAL PROGRAMS, THE OWNER OF THIS BUILDING HAS RETAINED AN INDEPENDENT ASBESTOS CONSULTANT. ALL INQUIRIES SHOULD BE DIRECTED TO THE OWNER OR HIS ASBESTOS CONSULTANT. IT IS A VIOLATION OF THE PROFESSIONAL LICENSE LAW FOR ANY PERSON TO ALTER THIS DRAWING IN ANY WAY, UNLESS ACTING UNDER THE DIRECTION OF A REGISTERED ARCHITECT. THE ALTERING ARCHITECT SHALL AFFIX HIS SEAL AND THE NOTATION "ALTERED BY" FOLLOWED BY HIS SIGNATURE AND DATE OF ALTERATION AND A SPECIFIC DESCRIPTION OF THE ALTERATION.

Michael Muroff Architect, LLC
333 Hudson Street
Suite 501
New York, NY 10013
Tel: 646. 230. 7111
Fax: 646. 230. 7277
NY Licence #015011

225 EAST 138th STREET

NYC DOB BIN: 2000973, 2000974
Block: 2340 Lots: 56, 58

BUILDING SECTION
TRANSVERSE

Date: 5-29-15
Scale: As Noted
Project No. : 14-165
Drawing By: RF
Checked By: MM

A-300.00

SHEET # 25 OF 31

©

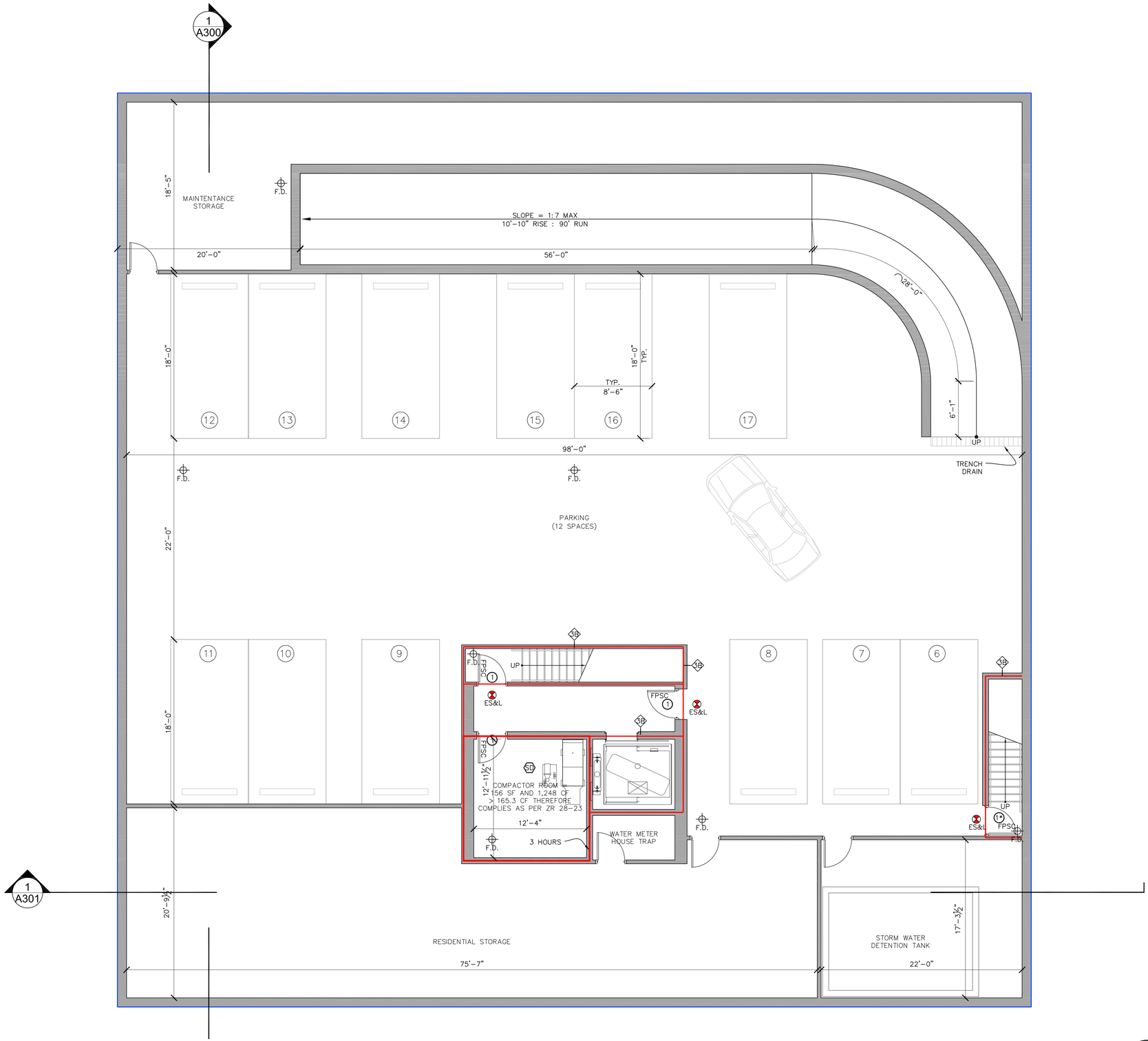

1 CONSTRUCTION PLAN - CELLAR

[EL = 1.5' PER NAVD88]

SCALE: 3/16" = 1'-0"

GRAPHICS LEGEND:

- 1 HOUR FIRE RATED PARTITION – SEE A-600
- 2 HOUR FIRE RATED PARTITION – SEE A-600
- 2B — 2 HR FR IMPACT RESISTANT EXIT ENCLOSURE – SEE A-600
- 3 HOUR FIRE RATED PARTITION – SEE A-600
- # — DOOR SCHEDULE
- MV — 50 CFM MECHANICAL VENTILATION
- ES&L — EXIT SIGN AND LIGHT – MAX. 5 WATTS PER SIDE
- SD — HARD WIRED NYC COMPLIANT SMOKE AND CO DETECTOR
- B-1 — KITCHEN / BATH TAG
- F.D. — FLOOR DRAIN
- R.D. — ROOF DRAIN
- OPEN TO BELOW
- ABOVE
- X'-XX" — DIMENSION MARKER
- 3 A100 — SECTION MARKER
- 3 A100 — ELEVATION MARKER

INTERIOR DOOR SCHEDULE:

DOOR #	DESCRIPTION	WIDTH x HEIGHT	FIRE RATING	MATERIAL
1	B LABEL 90 MIN.	3'-0" x 7'-0"	B-90 MIN. FPSC	H METAL
2	B LABEL 90 MIN.	3'-0" x 7'-0"	B-90 MIN. FPSC	MDF
3	BEDROOM/BATH	2'-10" x 7'-0"	–	WD/MDF
4	DOUBLE CLOSET	4'-0" x 7'-0"	–	WD/MDF
5	BEDROOM SLIDER	3'-0" x 7'-0"	–	WD/MDF

ALL ACCESS DOORS FOR MECHANICAL EQUIPMENT THROUGH FIRE RATED ENCLOSURES SHALL BE B-LABELED 90 MINTUE FIREPROOF SELF CLOSING.

APPENDIX G - FLOOD RESISTANT CONSTRUCTION NOTES:

G304.1 A-ZONE CONSTRUCTION STANDARDS. THE FOLLOWING STANDARDS SHALL APPLY TO POST-FIRM CONSTRUCTION AND SUBSTANTIAL IMPROVEMENTS LOCATED WITHIN A-ZONES.

G304.1.2 NONRESIDENTIAL. FOR BUILDINGS OR STRUCTURES THAT ARE NONRESIDENTIAL (FOR FLOOD ZONE PURPOSES), ALL POST-FIRM NEW BUILDINGS AND SUBSTANTIAL IMPROVEMENTS SHALL COMPLY WITH THE APPLICABLE REQUIREMENTS IN CHAPTER G3 AND ASCE 24, AND SHALL COMPLY WITH EITHER OF THE FOLLOWING:

1. ELEVATION OPTION. THE STRUCTURE SHALL COMPLY WITH ITEMS 1 THROUGH 6 OF SECTION G304.1.1; OR

2. DRY FLOODPROOFING OPTION. THE STRUCTURE SHALL COMPLY WITH THE FOLLOWING:

2.1. ELEVATION OF DRY FLOODPROOFING. THE STRUCTURE SHALL BE DRY FLOODPROOFED TO AT OR ABOVE THE DESIGN FLOOD ELEVATION SPECIFIED IN ASCE 24, TABLE 6-1;

2.2. DWELLING UNITS. WHERE DWELLING UNITS ARE LOCATED IN A BUILDING UTILIZING THE DRY FLOODPROOFING OPTION, THE FOLLOWING ADDITIONAL REQUIREMENTS SHALL BE MET:

2.2.1. ALL ROOMS AND SPACES WITHIN DWELLING UNITS SHALL BE LOCATED AT OR ABOVE THE DESIGN FLOOD ELEVATION;

2.2.2. NO MORE THAN ONE TOILET AND ONE SINK SHALL BE LOCATED BELOW THE DESIGN FLOOD ELEVATION. ANY SUCH TOILET ROOM SHALL NOT BE LOCATED WITHIN A DWELLING UNIT AND SHALL BE NO LARGER THAN REQUIRED BY CHAPTER 11; AND NO ROUGHING THEREIN SHALL BE PERMITTED TO ACCOMMODATE ADDITIONAL FIXTURES;

2.2.3. NO MORE THAN ONE TWO-COMPARTMENT LAUNDRY TRAY SHALL BE PERMITTED BELOW THE DESIGN FLOOD ELEVATION;

2.2.4. NO KITCHENS OR KITCHENETTES SHALL BE PERMITTED BELOW THE DESIGN FLOOD ELEVATION;

2.2.5. A RESTRICTIVE DECLARATION NOTING THE ABOVE RESTRICTIONS SHALL BE FILED WITH THE CITY REGISTER OR COUNTY CLERK, AND THE PAGE NUMBER AND LIBER NUMBER SHALL BE IDENTIFIED IN THE PERMIT APPLICATION AND ON THE CERTIFICATE OF OCCUPANCY.

2.3. UTILITIES AND EQUIPMENT. UTILITIES AND ATTENDANT EQUIPMENT SHALL BE LOCATED WITHIN THE DRY FLOODPROOFED ENCLOSURE, OR MAY BE LOCATED OUTSIDE THE DRY FLOODPROOFED ENCLOSURE PROVIDED THAT THEY ARE LOCATED AT OR ABOVE THE DESIGN FLOOD ELEVATION SPECIFIED IN ASCE 24, TABLE 7-1 OR ARE CONSTRUCTED SO AS TO PREVENT WATER FROM ENTERING OR ACCUMULATING WITHIN THE COMPONENTS DURING CONDITIONS OF FLOODING IN ACCORDANCE WITH ASCE 24.

2.4. CERTIFICATIONS. APPLICATIONS SHALL CONTAIN APPLICABLE CERTIFICATIONS IN ACCORDANCE WITH SECTION G104.5; AND

2.5. SPECIAL INSPECTIONS. SPECIAL INSPECTIONS SHALL BE AS REQUIRED BY SECTION G105.

SEE A-120 SERIES FOR INTERIOR LIGHTING ENERGY COMPLIANCE

SEE A-100 FOR FLOOD RESISTANT CONSTRUCTION NOTES

REVISIONS		
NO.	DESCRIPTIONS	DATE
1	DOB	5-29-15

NO.	TO WHOM ISSUED	DATE
	ISSUES	

Tahoe Development Group LLC — Owner
8217 153rd Avenue — Anthony Gurino
Howard Beach, NY 11414 — 718 835 4700

Michael Muroff Architect, LLC — Architect
333 Hudson Street, Suite 501 — Michael Muroff
New York, NY 10013 — 646 230 7111

Structural Engineering Systems, PLLC — Structural Engineer
214-41 42nd Avenue, Suite 2B — Joseph Gulino
Bayside, NY 11361 — 718 224 7161

S. Schwartz Engineering, PLLC — MEP Engineer
15 West 39th Street, Suite PH — Simon Schwartz
New York, NY 10018 — 212 695 3509

THIS DRAWING IS AN INSTRUMENT OF SERVICE AND SHALL REMAIN THE PROPERTY OF MICHAEL MUROFF ARCHITECT,L.L.C. WHETHER THE PROJECT FOR WHICH IT WAS PREPARED IS EXECUTED OR NOT. THE REPRODUCTION, ALTERATION OR REPUBLICATION OF THIS DRAWING FOR ANY OTHER PURPOSE, FOR ADDITIONS TO THIS PROJECT OR FOR COMPLETION OF THIS PROJECT BY OTHERS EXCEPT BY AGREEMENT IN WRITING WITH MICHAEL MUROFF ARCHITECT,L.L.C. SUBMISSION OR DISTRIBUTION TO MEET OFFICIAL REGULATORY REQUIREMENTS OR FOR OTHER PURPOSES IN CONNECTION WITH THIS PROJECT IS NOT TO BE CONSTRUED AS PUBLICATION IN DEROGATION OF THE RIGHTS OF MICHAEL MUROFF ARCHITECT,L.L.C. REPRODUCTION OR PUBLICATION BY ANY METHOD OR MEANS OR IN PART IS PROHIBITED. TITLE TO THIS DRAWING BELONGS TO MICHAEL MUROFF ARCHITECT,L.L.C. WITHOUT PREJUDICE.

THE FIRM OF MICHAEL MUROFF ARCHITECT,L.L.C. HAS NOT BEEN RETAINED TO DO FIELD SUPERVISION OR INSPECTION. THE FIRM OF MICHAEL MUROFF ARCHITECT,L.L.C. DOES NOT ASSUME RESPONSIBILITY FOR THE PROTECTION OF THE ENVIRONMENT, PROVIDE ANY SERVICES RELATED TO ASBESTOS, TOXIC WASTE, OR HAZARDOUS MATERIALS, THEIR REMOVAL, ABATEMENT, OR ENCAPSULATING. MICHAEL MUROFF ARCHITECT,L.L.C. ET AL. DO NOT SPECIFY OR MAKE RECOMMENDATIONS RELATED TO ASBESTOS IN ANY FORM. MICHAEL MUROFF ARCHITECT,L.L.C. ET AL. DO NOT ASSUME RESPONSIBILITY FOR ANY ASBESTOS ENVIRONMENT OR ASBESTOS CONTAINMENT OR REMOVAL PROCEDURES. THE OWNER IS TO HAVE BEEN RETAINED AN ASBESTOS ENVIRONMENTAL CONSULTANT. ALL INQUIRIES SHOULD BE DIRECTED TO THE OWNER OR HIS ASBESTOS CONSULTANT. IT IS A VIOLATION OF THE PROFESSIONAL LICENSE LAW FOR ANY PERSON TO ALTER THIS DRAWING IN ANY WAY, UNLESS ACTING UNDER THE DIRECTION OF A REGISTERED ARCHITECT. THE ALTERING ARCHITECT SHALL AFFIX HIS SEAL AND THE NOTATION "ALTERED BY" FOLLOWED BY HIS SIGNATURE AND DATE OF ALTERATION AND A SPECIFIC DESCRIPTION OF THE ALTERATION.

Michael Muroff Architect, LLC
333 Hudson Street
Suite 501
New York, NY 10013
Tel: 646. 230. 7111
Fax: 646. 230. 7277
NY LIcence #015011

225 EAST 138th STREET

NYC DOB BIN: 2000973, 2000974
Block: 2340 Lots: 56, 58

CONSTRUCTION PLAN CELLAR

Date: 5-29-15
Scale: As Noted
Project No.: 14-165
Drawing By: RF
Checked By: MM

REGISTERED ARCHITECT MICHAEL MUROFF No. 015011 STATE OF NEW YORK

A-100.00

SHEET # 15 OF 31

©

GENERAL NOTES

1. ALL CONSTRUCTION METHODS SHALL COMPLY WITH THE REQUIREMENTS OF CHAPTER 33 OF THE NEW YORK CITY BUILDING CODE 2008 FOR THE "SAFE GUARD DURING CONSTRUCTION."
2. THE CONTRACTOR SHALL COMPLY WITH THE LATEST NEW YORK CITY BUILDING CODE 2008 AND ALL OTHER GOVERNING CODES AND REGULATIONS.
3. THE CONTRACTOR SHALL VERIFY ALL CONDITIONS AND DIMENSIONS IN THE FIELD AND BE RESPONSIBLE FOR ACCURATE COORDINATION. ANY DISCREPANCIES SHALL BE REPORTED TO THE ENGINEER OF RECORD BEFORE PROCEEDING.
4. PATCH AND REPAIR EXISTING CONDITIONS DAMAGED DURING THE COURSE OF NEW CONSTRUCTION AT NO EXTRA COST TO THE OWNER.
5. ALL DIMENSIONS AND LOCATIONS OF EXISTING STRUCTURAL AND ARCHITECTURAL ELEMENTS SHALL BE VERIFIED BY THE CONTRACTOR AND COORDINATED WITH THE NEW STRUCTURAL ELEMENTS PRIOR TO DEMOLITION, FABRICATION AND CONSTRUCTION.
6. EXISTING CONSTRUCTION AND DIMENSIONS SHOWN ARE PER INFORMATION BY THE OWNER, BY FIELD MEASUREMENT, OR ARE ASSUMED. ALL EXISTING INFORMATION MUST BE VERIFIED IN THE FIELD PRIOR TO FABRICATION. THE OWNER'S REPRESENTATIVE AND STRUCTURAL ENGINEER ARE NOT RESPONSIBLE FOR ACCURACY OF THE INFORMATION. EXISTING CONSTRUCTION AT AREAS WHERE NEW WORK IS NOT CONTEMPLATED MAY NOT BE COMPLETELY SHOWN.
7. TEMPORARY BRACING OR SHORING SHALL BE PROVIDED WHEREVER REQUIRED TO SUPPORT LOADS AS MAY BE IMPOSED UPON THE STRUCTURE DURING CONSTRUCTION. PROVIDE TEMPORARY SHORING WHEREVER REQUIRED DUE TO CONSTRUCTION SEQUENCING FOR THE SUPPORT OF THE STRUCTURE PRIOR TO INSTALLATION OF NEW SUPPORT STEEL. SUCH BRACING AND SHORING SHALL BE THE SOLE RESPONSIBILITY OF THE CONTRACTOR AND SHALL REMAIN IN PLACE AS LONG AS REQUIRED TO MAINTAIN SAFETY.
8. SUBMIT SHOP DRAWINGS ON STEEL, CONCRETE, MIX DESIGNS, METAL DECK REBAR AND JOISTS, ETC.
9. THE CONTRACTOR SHALL NOT SCALE DRAWINGS, USE DIMENSIONS AS GIVEN ON PLANS AND DETAILS.
10. ALL SHEATHING AND ALL FORMWORK SHALL BE DESIGNED AND FILED BY A NEW YORK STATE PROFESSIONAL ENGINEER EMPLOYED BY THE CONTRACTOR.
11. ALL OPENINGS IN THE SLABS ARE TO BE COORDINATED BY THE CONTRACTOR WITH THE MECHANICAL, ARCHITECTURAL AND PLUMBING FINAL APPROVED SHOP DRAWINGS.
12. IF A CONFLICT SHOULD ARISE BETWEEN DRAWINGS AND SPECIFICATIONS, THE MORE RESTRICTED DETAIL SHALL APPLY.

VISIT TO SITE

1. ALL CONTRACTORS MUST VISIT THE SITE AND NOTE ALL EXISTING CONDITIONS AS WELL AS ALL CONDITIONS TO BE MET BEFORE SUBMITTING BID. LACK OF THOROUGH UNDERSTANDING OF THE PROJECT REQUIREMENTS SHALL NOT CONSTITUTE AN EXCUSE FOR ERRORS OR OMISSIONS, NOR JUSTIFY A REQUEST FOR EXTRA COMPENSATION.

CONCRETE NOTES

1. ALL CONCRETE SHALL BE HIGH EARLY STRENGTH 4000 PSI COMPRESSIVE STRENGTH WHEN TESTED AT TWENTY EIGHT (28) DAYS AND WITH A UNIT WEIGHT OF 145 PCF, U.O.N.
2. ALL REINFORCING BARS SHALL CONFORM TO ASTM A615–GRADE 60.
3. ALL WELDED WIRE FABRIC (WWF) SHALL BE 6X6–W2.9XW2.9 CONFORMING TO STANDARDS OF ASTM A785.
4. ALL CONCRETE REINFORCEMENT SHALL BE DETAILED, FABRICATED, LABELED, SUPPORTED AND SPACED IN FORMS AND SECURED IN PLACE IN ACCORDANCE WITH THE PROCEDURES AND REQUIREMENTS OUTLINED IN THE LATEST EDITION OF THE "BUILDING CODE REQUIREMENTS FOR REINFORCED CONCRETE", ACI 318 AND THE "MANUAL OF STANDARD PRACTICE FOR DETAILING REINFORCED CONCRETE STRUCTURES", ACI 315.
5. THE CONRACTOR SHALL VERIFY ALL DRAWINGS FOR COORDINATION BETWEEN TRADES, LOCATE BOLTS AND SLEEVES AND TRENCHES AS REQUIRED FOR MECHANICAL TRADES, PROVIDE ONE OR INSTALL ANCHORS, INSTALL ANCHOR INSERTS, HANGERS, ETC. AS REQUIRED FOR VARIOUS TRADES.
6. THE CONTRACTOR SHALL SUBMIT SHOP DRAWINGS OF REINFORCEMENT DETAILS FOR APPROVAL BEFORE PROCEEDING WITH THE WORK. THE CONTRACTOR SHALL CHECK ALL DIMENSIONS AND ACCEPT FULL RESPONSIBILITY FOR DIMENSIONAL CORRECTNESS.
7. ALL STRUCTURAL CONCRETE CONSTRUCTION AS DEFINED BY SECTION C26–1000.600F OF THE NYC BUILDING CODE SHALL BE CONTINUOUSLY INSPECTED AT THE JOB SITE AND THE BATCH PLANT BY QUALIFIED INSPECTORS UNDER THE SUPERVISION OF A LICENSED PROFESSIONAL ENGINEER IN ACCORDANCE WITH CONTROLLED INSPECTION REQUIREMENTS OF THE BUILDING CODE.
8. EACH LOAD OF CONCRETE AT THE BATCH PLANT SHALL BE CERTIFIED AS TO ACTUAL WEIGHT OF MATERIAL, WATER CEMENT RATIO, CONFORMANCE TO DESIGN MIX AS ADJUSTED FOR MOISTURE CONTENT AND GRADUATION, CONFORMANCE OF MATERIALS TO R.S. 10–3, ETC. ATTESTATION OF THESE RESULTS BY THE PLANT INSPECTOR. PRODUCER SHALL ACCOMPANY EACH LOAD OF CONCRETE DELIVERED TO THE JOB SITES AS PER N.Y.C. BUILDING CODE 2008.
9. ON SITE INSPECTION OF CONCRETE CONSTRUCTION SHALL INCLUDE THE FOLLOWING:
   A. THE SIZE AND DIMENSIONS OF THE CONCRETE MEMBERS FORMED, THE SIZES AND POSITION OF THE REINFORCEMENT IN PLACE AND CURING METHODS EMPLOYED.
   B. FOUR (4) SAMPLES OF CONCRETE FOR EACH 50 YARDS OF CONCRETE SHALL BE TAKEN FROM THE MIXER AND TESTED IN COMPRESSION IN ACCORDANCE WITH ASTM C39–61 AND TESTED IN 28 DAYS.
   C. FROM THE CONCRETE SAMPLES ABOVE RECORDS OF SLUMP, AIR CONTENT, UNIT WEIGHT AND TEMPERATURE SHALL BE MADE AND REPORTED TO THE DEPARTMENT OF BUILDINGS WITH THE COMPRESSION TESTS.
10. FORM WORK AND BRACING OF EXCAVATIONS SHALL COMPLY FULLY WITH N.Y.C. BUILDING CODE.
11. ALL CONCRETE IN ITS FINAL FORM EXPOSED TO THE WEATHER SHALL BE AIR ENTRAINED.
12. CONCRETE COVER SHALL BE IN ACCORDANCE WITH ACI–318–02.
13. ALL CONCRETE, INCLUDING FOUNDATION WORK, IS TO BE VIBRATED. PROPER USE OF VIBRATORS IS A MUST. VIBRATORS SHALL NOT BE USED TO TRANSPORT CONCRETE.
14. ALL EMBEDMENTS, INCLUDING ANCHOR BOLTS, SHALL BE IN PLACE PRIOR TO POURING CONCRETE.
15. CONCRETE SHALL BE PLACED IN ACCORDANCE WITH ACI.304, LATEST EDITION. CONCRETE SHALL NOT BE SUBJECT TO DROPS IN EXCESS OF 5 FEET.

CONTROLLED INSPECTION TO BE PERFORMED BY OWNER'S ENGINEER

1. UNDERPINNING
2. SHORING

LIST OF DRAWINGS

SOE–100.00 GENERAL NOTES AND SITE PLAN
SOE–101.00 LOCATION PLAN
SOE–102.00 UNDERPINNING SEQUENCE AND SLOPE SECTION
SOE–103.00 UNDERPINNING SECTIONS AND DETAILS

LIST OF ABBREVIATIONS & LEGEND

FTG.	–	FOOTING
U.O.N.	–	UNLESS OTHERWISE NOTED
U.N.O.	–	UNLESS NOTED OTHERWISE
N.T.S.	–	NOT TO SCALE
P.A.F.	–	POWDER ACTUATED FASTENER
PSI	–	POUNDS PER SQUARE INCH
PSF	–	POUNDS PER SQUARE FOOT
PCF	–	POUNDS PER CUBIC FOOT
O.C.	–	ON CENTER
OPNG.	–	OPENING
MAX.	–	MAXIMUM
TYP.	–	TYPICAL
SQ.	–	SQUARE
EA.	–	EACH
E.W.	–	EACH WAY
E.F.	–	EACH FACE
H.S.	–	HIGH STRENGTH
TH.	–	THICK
EXIST.	–	EXISTING
CONT.	–	CONTINUOUS
COL.	–	COLUMN
@	–	AT
℄	–	PLATE
MC	–	FULL MOMENT CONNECTION OF MEMBER
NYCBC	–	NEW YORK CITY BUILDING CODE
DWG.	–	DRAWING
T.O.S.	–	TOP OF SLAB
(P)	–	POST DOWN
(P)	–	POST UP
1 / S-1		SECTION NO. DWG. WHERE SECTION CAN BE FOUND. IF –, THEN SECTION IS ON THE SAME DWG.

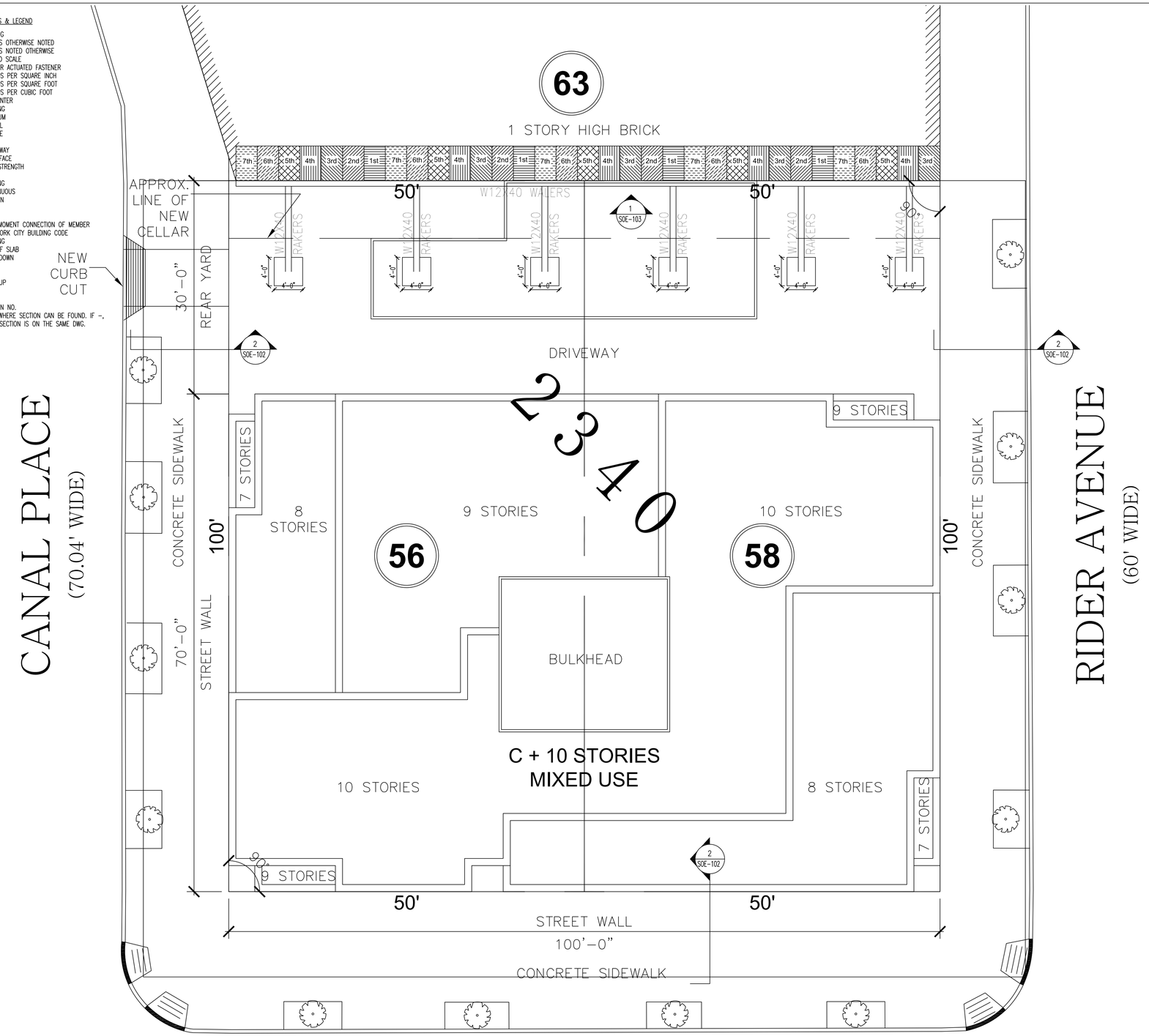

1 SITE PLAN
SCALE: N.T.S.

REVISIONS		
NO.	DESCRIPTIONS	DATE

ISSUES		
1	DOB	–
NO.	TO WHOM ISSUED	DATE

Tahoe Development Group LLC
8217 153rd Avenue
Howard Beach, NY 11414
Owner
Anthony Gurino
718 835 4700

Michael Muroff Architect, LLC
333 Hudson Street, Suite 501
New York, NY 10013
Architect
Michael Muroff
646 230 7113

Structural Engineering Systems, PLLC
214–41 42nd Avenue, Suite 2B
Bayside, NY 11361
Structural Engineer
Joseph Gulino
718 224 7161

S. Schwartz Engineering, PLLC
15 West 39th Street, Suite PH
New York, NY 10018
MEP Engineer
Simon Schwartz
212 695 3509

THIS DRAWING IS AN INSTRUMENT OF SERVICE AND SHALL REMAIN THE PROPERTY OF MICHAEL MUROFF ARCHITECT,LLC. WHETHER THE PROJECT FOR WHICH IT IS PREPARED IS EXECUTED OR NOT. THE REPRODUCTION, ALTERATION OR REPUBLICATION OF THIS DRAWING WITHOUT THE WRITTEN CONSENT OF MICHAEL MUROFF ARCHITECT,LLC. IS FORBIDDEN. COMPLETION OF THIS PROJECT BY OTHERS EXCEPT BY AGREEMENT IN WRITING WITH MICHAEL MUROFF ARCHITECT,LLC. SUBMISSION OR DISTRIBUTION TO MEET OFFICIAL REGULATORY REQUIREMENTS OR FOR OTHER PURPOSES IN CONNECTION WITH THE PROJECT IS NOT TO BE CONSTRUED AS PUBLICATION IN DEROGATION OF THE RIGHTS OF MICHAEL MUROFF ARCHITECT,LLC. REPRODUCTION OR PUBLICATION BY ANY METHOD IN WHOLE OR IN PART IS PROHIBITED. TITLE TO THIS DRAWING BELONGS TO MICHAEL MUROFF ARCHITECT,LLC. WITHOUT PREJUDICE.

THE FIRM OF MICHAEL MUROFF ARCHITECT,LLC. HAS NOT BEEN RETAINED TO DO FIELD SUPERVISION OR INSPECTION. THE FIRM OF MICHAEL MUROFF ARCHITECT,LLC., IT'S PRINCIPLES, EMPLOYEES, AND CONSULTANTS HAVE NOT BEEN RETAINED TO PROVIDE ANY SERVICES RELATED TO ASBESTOS, TOXIC WASTE, OR HAZARDOUS MATERIALS. THEIR REMOVAL, ABATEMENT, OR ENCAPSULATING. MICHAEL MUROFF ARCHITECT,LLC., IT'S, ITS AGENTS OR ANY RECOMMENDATIONS RELATED TO ASBESTOS, HAZARDOUS MATERIALS OR OTHER TOXIC WASTE IS NOT THE RESPONSIBILITY OF MICHAEL MUROFF ARCHITECT,LLC. ALL MATERIALS SUSPECTED OF BEING ASBESTOS OR OTHER HAZARDOUS MATERIALS SHALL BE REMOVED BY A QUALIFIED CONTRACTOR. THE OWNER OF THIS BUILDING HAS RETAINED AN INDEPENDENT ASBESTOS CONSULTANT. ALL INQUIRIES SHOULD BE DIRECTED TO THE OWNER OR HIS ASBESTOS CONSULTANT. IT IS A VIOLATION OF THE PROFESSIONAL LICENSE LAW FOR ANY PERSON TO ALTER THIS DRAWING IN ANY WAY, UNLESS ACTING UNDER THE DIRECTION OF A REGISTERED ARCHITECT. THE ALTERING ARCHITECT SHALL AFFIX HIS SEAL AND THE NOTATION "ALTERED BY" FOLLOWED BY HIS SIGNATURE AND DATE OF ALTERATION AND A SPECIFIC DESCRIPTION OF THE ALTERATION.

Michael Muroff Architect, LLC
333 Hudson Street
Suite 501
New York, NY 10013
Tel: 646. 230. 7113
Fax: 646. 230. 7277
NY Licence #015011

221–227
EAST 138th STREET

NYC DOB BIN: 2000973, 2000974
Block: 2340 Lots: 56, 58

GENERAL NOTES AND SITE PLAN

Date: 7–31–15
Scale: As Noted
Drawing By: DDT
Checked By: JAG

SOE–100.00

SHEET # 1 OF 4

©

1. A SURVEY MONITORING SYSTEM CONSISTING OF CONTROL POINTS ON WALLS OF ALL ADJACENT BLDGS. SHALL BE INSTALLED TO MONITOR MOVEMENTS ON A WEEKLY BASIS AS UNDERPINNING IS PROCEEDING. STRUCTURAL ENGINEERING SYSTEMS, PLLC SHALL BE NOTIFIED IMMEDIATELY OF ANY STRUCTURE MOVEMENTS.

2. OWNER TO OBTAIN A PRECONSTRUCTION SURVEY OF ADJACENT PROPERTIES.

3. CLIENT TO OBTAIN AN AGREEMENT WITH NEIGHBOR TO UNDERPIN THEIR BLDG. NO UNDERPINNING IS TO BE PERFORMED UNTIL SUCH AGREEMENT IS EXECUTED.

4. A PERMIT SHALL BE OBTAINED FROM DOT FOR SIDEWALK CLOSURE TO INSTALL SOLDIER PILES OR ANY INTRUSION PAST PROPERTY LINE.

SURVEY AND MONITORING NOTES:

1. A BUILDING PROTECTION PLAN (BPP) IN ACCORDANCE WITH THE REQUIREMENTS OF THE NYC DOB TECHNICAL POLICY AND PROCEDURE NOTICE #88 SHOULD BE PREPARED.

2. A PRE-CONSTRCTION (PRE-CONDITION) SURVEY OF THE ADJACENT STRUCTURES AND BUILDINGS, SHALL BE PERFORMED PRIOR TO CONSTRUCTION IN ACCORDANCE WITH THE BUILDING PROTECTION PLAN. THE CONTRACTOR SHALL REVIEW AND FAMILIARIZE HIMSELF WITH THE RESULTS OF THE SURVEY. THE CONTRACTOR SHALL MAKE A VISUAL INSPECTION OF THE ADJACENT STRUCTURES (INSIDE AND OUT) PRIOR TO STARTING THE WORK.

3. MONITOR THE ABUTTING BUILDINGS AND STRUCTURES TO THE NORTH AND SOUTH BY OPTICAL SURVEY AT ABOUT 25-FT INTERVALS FOR VERTICAL AND LATERAL MOVEMENT. NOTE THAT BUILDING MONITORING LOCATIONS ARE NOT SHOWN ON THE SUPPORT OF EXCAVATION PLAN FOR CLARITY.

4. CRACK GAUGES SHALL BE INSTALLED ON EXISTING NEIGHBORING BUILDINGS CRACKS AND MONITORED DURING EXCAVATION AND UNDERPINNING OPERATIONS.

5. OBTAIN BASELINE READINGS OF THE MONITORING POINTS PRIOR TO EXCAVATION AND NEW CONSTRUCTION. HORIZONTAL AND VERTICAL SURVEY DATA TO BE OBTAINED BY A NEW YORK STATE LICENSE SURVEYOR.

6. PERFORM OPTICAL SURVEYS AT LEAST TWICE PER WEEK DURING EXCAVATION AND FOUNDATION CONSTRUCTION. IF MOVEMENTS OCCUR, INCREASE THE FREQUENCY OF THE READING AS RECOMMENDED BY THE BPP OR ENGINEER.

7. VIBRATION MONITORS (SEISMOGRAPHS) SHALL BE PLACED ADJACENT TO AREAS WHERE WORK IS BEING PERFORMED AS NEGOTIATED WITH THE NEIGHBORING BUILDINGS. NOTE THAT THE SEISMOGRAPH LOCATION ARE NOT SHOWN ON THE SUPPORT OF EXCAVATION PLAN FOR CLARITY.

8. BUILDING MOVEMENT AND VIBRATION CRITERIA:

   A. ALL MONITORING FREQUENCIES SHALL COMPLY WITH TPPN 10.88

   B. IF THE VERTICAL OR LATERAL BUILDING MOVEMENT REACHES 1/8-INCH, IMMEDIATELY NOTIFY THE CONSTRUCTION MANAGER, OWNER, AND ENGINEER.

   C. IF THE VERTICAL OR LATERAL BUILDING MOVEMENT REACHES 1/4-INCH, IMMEDIATELY NOTIFY THE CONSTRUCTION MANAGER, OWNER, ENGINEER, AND STOP WORK. THE WORK SHALL RESUME UPON APPROVAL BY THE CONSTRUCTION MANAGER, OWNER, AND ENGINEER OF APPROVED REMEDIAL MEASURES AND/OR MODIFIED CONSTRUCTION PROCEDURES.

D. IF THE VIBRATIONS EXCEED 0.5 IN/SEC, AND/OR ANY INDIVIDUAL CRACK GAUGE READING EXCEEDS 2mm, IMMEDIATELY INFORM THE CONSTRUCTION MANAGER, OWNER, ENGINEER AND STOP WORK. THE WORK SHALL RESUME UPON APPROVAL BY THE CONSTRUCTION MANAGER, OWNER, ENGINEER OF APPROVED REMEDIAL MEASURES AND/OR MODIFIED CONSTRUCTION PROCEDURES. INFORM NYC DOB EXCAVATION UNIT, OBSERVE NEIGHBORING STRUCTURE CONDITIONS AND REVIEW AND MODIFY AS NECESSARY, HIS MEANS AND METHODS FOR EXCAVATION, AND SUPPORT OF EXCAVATION AND UNDERPINNING PER CONSTRUCTION. WORK SHALL NOT COMMENCE UNTIL AGREED UPON CORRECTIVE ACTION IS IMPLEMENTED BY THE CONTRACTOR.

9. VIBRATION MONITORS SHALL TAKE REAL-TIME READINGS.

10. ALL MONITORING DATA SHALL BE PRESENTED TO THE CONSTRUCTION MANAGER, OWNER, AND ENGINEER AT THE END OF EACH DAY OR AT AGREED-UPON INTERVALS.

UNDERPINNING PROCEDURE

1. A PRE-CONSTRUCTION SURVEY SHALL BE PERFORMED ON THE BUILDING TO BE UNDERPINNED BY AN INDEPENDENT PROFESSIONAL IN ORDER TO DOCUMENT EXISTING CONDITIONS OF THE BUILDING. PAY PARTICULAR ATTENTION TO AND DOCUMENT SIGNS OF EXISTING STRESS INCLUDING CRACKS, SAGGING, TIGHT DOORS, ETC. THE SURVEY SHALL INCLUDE EACH FLOOR, BOTH INSIDE AND OUT AND SHALL INCLUDE PICTURES, MEASUREMENTS, ETC. LOCATE ALL ADJACENT UTILITIES BY TEST PIT AND NOTIFY ONE CALL PRIOR TO START OF UNDERPINNING.

2. A SURVEY MONITORING SYSTEM SHALL BE ESTABLISHED PRIOR TO BEGINNING UNDERPINNING. BOTH HORIZONTAL AND VERTICAL MOVEMENTS SHALL BE MONITORED ON A WEEKLY BASIS AS UNDERPINNING IS PROCEEDING. STRUCTURAL ENGINEERING SYSTEMS, PLLC SHALL BE NOTIFIED IMMEDIATELY OF ANY STRUCTURE MOVEMENTS.

3. UNDERPINNING PITS ARE CLASSIFIED BY OSHA AS CONFINED SPACES AND ALL APPLICABLE REQUIREMENTS SUCH AS AIR MONITORING, PERSONAL RETRIEVAL SYSTEMS, ACCESS, ETC., MUST BE IMPLEMENTED.

4. THE SITE SHALL BE EXCAVATED TO THE ELEVATIONS OF THESE PLANS. NOTIFY THE ENGINEER IF BOTTOM OF FOOTING ELEVATIONS VARY FROM WHAT IS SHOWN ON THE DRAWINGS. SLOPE THE GROUND SURFACE AWAY FROM THE FOUNDATION JUST ENOUGH TO PREVENT ACCUMULATION OF SURFACE WATER ALONG THE UNDERPINNING AREA. AN APPROACH PIT AS SHOWN ON THESE DRAWINGS SHALL BE PROVIDED.

5. THE CONTRACTOR IS REQUIRED TO COMMENCE WITH ALL #1 PINS FIRST. THE UNDERPINNING PIT EXCAVATION UNDER THE FOOTING SHALL PROGRESS DOWNWARD BY HAND EXCAVATION.

6. DO NOT DISTURB THE BOTTOM OF PIT MATERIAL DURING EXCAVATION. BOTTOM OF PIT SHALL BE INSPECTED FOR ADEQUATE BEARING. IF 2 TSF ALLOWABLE BEARING AT THE BOTTOM OF PIT IS NOT PRESENT, THE ENGINEER SHALL BE NOTIFIED.

7. BULKHEAD THE APPROACH PIT AND POUR THE PIT WITH 4000 PSI CONCRETE LEAVING THE TOP OF CONCRETE APPROXIMATELY 3" BELOW THE BOTTOM OF THE FOOTING. CONCRETE MAY BE PLACED USING THE FREE-FALL METHOD. PUMPING OR TREMIE PLACEMENT OF CONCRETE IS NOT REQUIRED, BUT PREFERRED. THE UNDERPINS TO BE BACKFILLED ONCE PERFORMED.

8. THE NEXT WORK DAY, DRYPACK THE UNDERPINNING PIER BY TAMPING THE DRYPACK TO COMPLETELY FILL THE SPACE. DRYPACK SHALL CONSIST OF A MIXTURE OF TWO PARTS SAND AND ONE PART TYPE 1 CEMENT WITH JUST ENOUGH WATER TO FORM A BALL WHEN SQUEEZED IN A HAND.

9. UPON COMPLETION OF DRYPACK, ADJACENT UNDERPINNING PITS MAY BE EXCAVATED. IF PIERS ARE CONTINUOUS, THE SIDE BOARDS SHOULD BE STRIPPED AS EXCAVATION PROCEEDS.

10. WIDTH OF UNDERPINNING PIERS, DEPTH PRIOR TO RING BOARD INSTALLATION, SPACING BETWEEN PIERS, ETC., SHALL BE REDUCED, AS WARRANTED, IF LOOSE MATERIAL OR A DETERIORATED FOUNDATION IS ENCOUNTERED.

11. NO TWO UNDERPINNING PITS CLOSER THAN 12" CENTER TO CENTER, NOR TWO ADJACENT COLUMN FOOTING, MAY BE UNDERPINNED CONCURRENTLY.

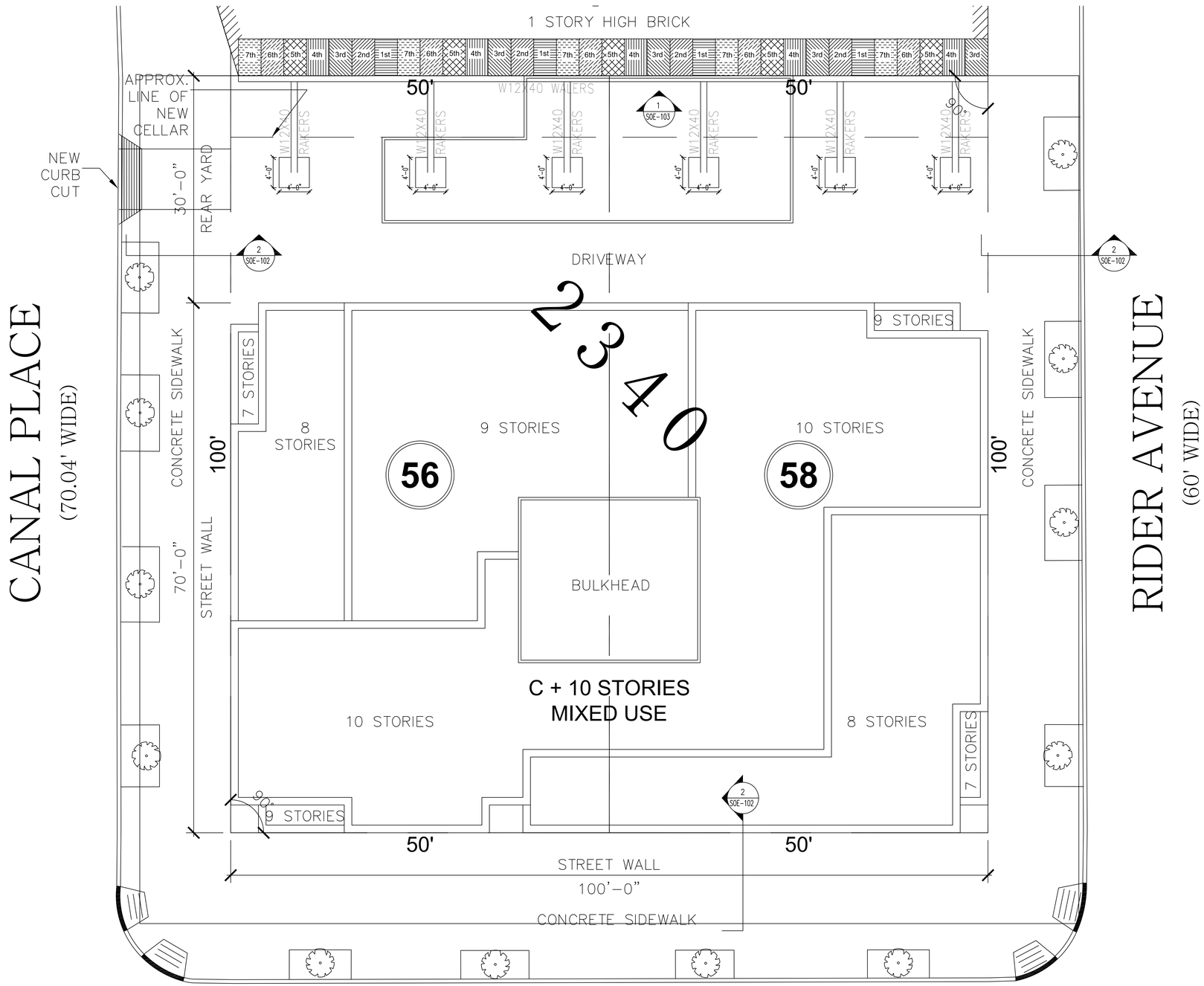

1 LOCATION PLAN
SCALE: N.T.S.

REVISIONS

NO.	DESCRIPTIONS	DATE

NO.	TO WHOM ISSUED	DATE
1	DOB	-

ISSUES

Tahoe Development Group LLC
8217 153rd Avenue
Howard Beach, NY 11414
Owner
Anthony Gurino
718 835 4700

Michael Muroff Architect, LLC
333 Hudson Street, Suite 501
New York, NY 10013
Architect
Michael Muroff
646 230 7111

Structural Engineering Systems, PLLC
214-41 42nd Avenue, Suite 2B
Bayside, NY 11361
Structural Engineer
Joseph Gulino
718 224 7161

S. Schwartz Engineering, PLLC
15 West 39th Street, Suite PH
New York, NY 10018
MEP Engineer
Simon Schwartz
212 695 3509

THIS DRAWING IS AN INSTRUMENT OF SERVICE AND SHALL REMAIN THE PROPERTY OF MICHAEL MUROFF ARCHITECT,L.L.C. WHETHER THE PROJECT FOR WHICH IT IS MADE IS EXECUTED OR NOT. THIS DRAWING SHALL NOT BE USED BY THE OWNER OR OTHERS ON OTHER PROJECTS, FOR ADDITIONS TO THIS PROJECT OR FOR COMPLETION OF THIS PROJECT BY OTHERS, EXCEPT BY AGREEMENT IN WRITING AND WITH APPROPRIATE COMPENSATION TO MICHAEL MUROFF ARCHITECT,L.L.C., UNLESS OTHERWISE PROVIDED IN WRITING. THE OWNER SHALL MAKE CLEAR TO ANY OTHER PERSON USING THIS DRAWING IN CONNECTION WITH THE PROJECT IS NOT TO BE CONSTRUED AS PUBLICATION IN VIOLATION OF THE RIGHTS OF MICHAEL MUROFF ARCHITECT,L.L.C. REPRODUCTION OR PUBLICATION BY ANY METHOD IN WHOLE OR IN PART IS PROHIBITED. TITLE TO THIS DRAWING BELONGS TO MICHAEL MUROFF ARCHITECT,L.L.C. WITHOUT PREJUDICE.

THE FIRM OF MICHAEL MUROFF ARCHITECT,L.L.C. HAS NOT BEEN RETAINED TO DO FIELD SUPERVISION OR INSPECTION. THE FIRM OF MICHAEL MUROFF ARCHITECT,L.L.C. ITS PRINCIPLES, EMPLOYEES, AND CONSULTANTS HAVE NOT BEEN RETAINED TO PROVIDE ANY SERVICES RELATED TO ASBESTOS, TOXIC WASTE, AND HAZARDOUS MATERIALS. THEIR REGIONAL, ARCHITECTS, OR ENGINEERING, MICHAEL MUROFF ARCHITECT,L.L.C., ITS AL. DO NOT SPECIFY OR MAKE RECOMMENDATIONS ABOUT ASBESTOS, TOXIC WASTE, AND HAZARDOUS MATERIALS. THE OWNER OR HIS ASBESTOS CONSULTANT MUST INSPECT THE BUILDING FOR ASBESTOS. IF ASBESTOS CONTAMINATION OR REMOVAL PROCEDURE, THE AREAS OF THE BUILDING HAS RECEIVED AN INSPECTION ASBESTOS CONSULTANT. ALL INQUIRES SHOULD BE DIRECTED TO THE OWNER OR HIS ASBESTOS CONSULTANT. IT IS A VIOLATION OF THE PROFESSIONAL LICENSE LAW FOR ANY PERSON TO ALTER THIS DRAWING IN ANY WAY, UNLESS ACTING UNDER THE DIRECTION OF A REGISTERED ARCHITECT. THE ALTERING ARCHITECT SHALL AFFIX HIS SEAL AND THE NOTATION "ALTERED BY" FOLLOWED BY HIS SIGNATURE AND DATE OF ALTERATION AND A SPECIFIC DESCRIPTION OF THE ALTERATION.

Michael Muroff Architect, LLC
333 Hudson Street
Suite 501
New York, NY 10013
Tel: 646. 230. 7111
Fax: 646. 230. 7277
NY Licence #015011

221-227
EAST 138th STREET

NYC DOB BIN: 2000973, 2000974
Block: 2340 Lots: 56, 58

LOCATION PLAN

Date: 7-31-15
Scale: As Noted
Drawing By: DDT
Checked By: JAG

SOE-101.00

SHEET # 2 OF 4

©

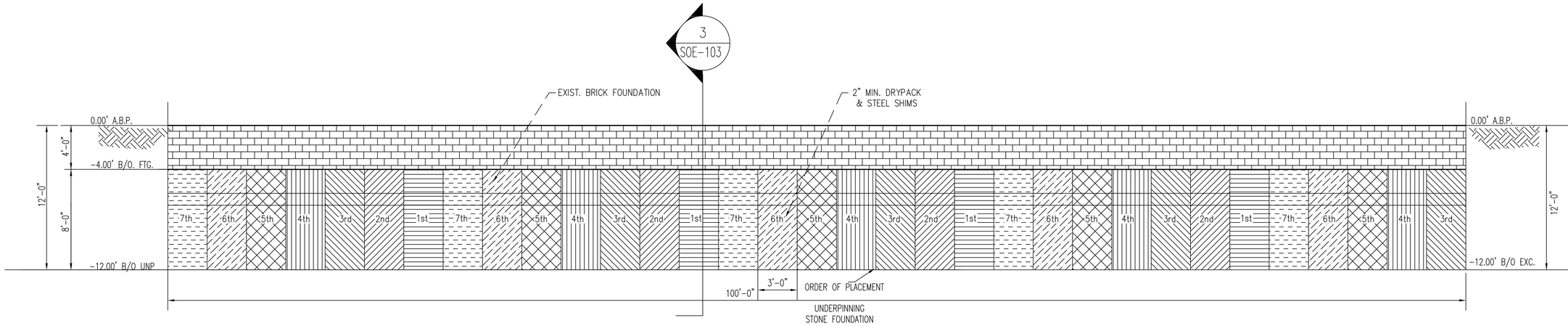

1 SOE-100 UNDERPINNING ELEVATION SEQUENCE
SCALE: N.T.S.

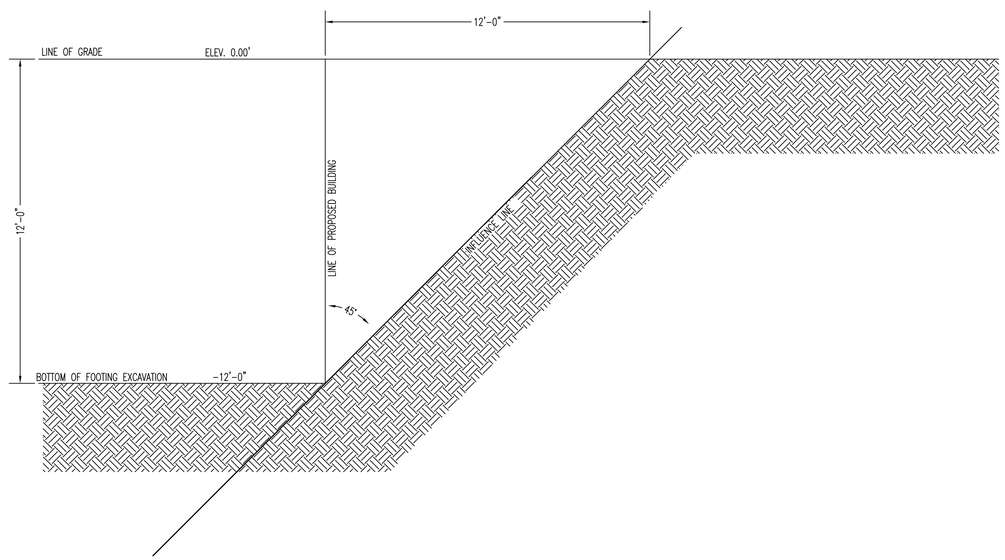

2 SOE-100 SLOPE SECTION
SCALE: N.T.S.

REVISIONS		
NO.	DESCRIPTIONS	DATE
1	DOB	-

NO.	TO WHOM ISSUED	DATE
	ISSUES	

Tahoe Development Group LLC
8217 153rd Avenue
Howard Beach, NY 11414
Owner
Anthony Gurino
718 835 4700

Michael Muroff Architect, LLC
333 Hudson Street, Suite 501
New York, NY 10013
Architect
Michael Muroff
646 230 7111

Structural Engineering Systems, PLLC
214-41 42nd Avenue, Suite 2B
Bayside, NY 11361
Structural Engineer
Joseph Gulino
718 224 7161

S. Schwartz Engineering, PLLC
15 West 39th Street, Suite PH
New York, NY 10018
MEP Engineer
Simon Schwartz
212 695 3509

THIS DRAWING IS AN INSTRUMENT OF SERVICE AND SHALL REMAIN THE PROPERTY OF MICHAEL MUROFF ARCHITECT,LLC. WHETHER THE PROJECT FOR WHICH IT IS MADE IS EXECUTED OR NOT. THIS DRAWING SHALL NOT BE USED BY THE OWNER OR OTHERS ON OTHER PROJECTS, FOR ADDITIONS TO THIS PROJECT OR FOR COMPLETION OF THIS PROJECT BY OTHERS EXCEPT BY AGREEMENT IN WRITING WITH MICHAEL MUROFF ARCHITECT,LLC. SUBMISSION OR DISTRIBUTION TO MEET OFFICIAL REGULATORY REQUIREMENTS OR FOR OTHER PURPOSES IN CONNECTION WITH THE PROJECT IS NOT TO BE CONSTRUED AS PUBLICATION IN DEROGATION OF THE RIGHTS OF MICHAEL MUROFF ARCHITECT,LLC. REPRODUCTION OR PUBLICATION BY ANY METHOD IN WHOLE OR IN PART IS PROHIBITED. TITLE TO THIS DRAWING BELONGS TO MICHAEL MUROFF ARCHITECT,LLC. WITHOUT PREJUDICE.

THE FIRM OF MICHAEL MUROFF ARCHITECT,LLC. HAS NOT BEEN RETAINED TO DO FIELD SUPERVISION OR INSPECTION. THE FIRM OF MICHAEL MUROFF ARCHITECT,LLC. IS A CONSULTING ARCHITECTURAL AND CONSULTANCY FIRM. THE FIRM HAS NOT BEEN RETAINED TO PROVIDE ANY SERVICES RELATED TO HAZARDOUS, TOXIC WASTE, OR HAZARDOUS MATERIALS. THEIR REMOVAL, ABATEMENT, OR ENCAPSULATING. MICHAEL MUROFF ARCHITECT,LLC. ET. AL. DO NOT STUDY OR MAKE RECOMMENDATIONS RELATED TO ASBESTOS IN ANY FORM, ASBESTOS EXPOSURE ASSESSMENTS, APPRAISAL, ASBESTOS HEALTH HAZARDS OR EXPOSURE, CORRECTIVE ACTION PROGRAMS OF ASBESTOS TO PREVENT OR REMOVE ASBESTOS, TESTING FOR ASBESTOS, SURVEY OF ASBESTOS, OR ANY OTHER ASPECT OF ASBESTOS. ALL ASBESTOS SHOULD BE REMOVED AND ABATEMENT ASBESTOS CONSULTANT. ALL ASBESTOS SHOULD BE REMOVED AND ABATEMENT ASBESTOS CONSULTANT. IT IS A VIOLATION OF THE REGISTERED ARCHITECT LICENSE LAW FOR ANY PERSON TO ALTER THIS DRAWING IN ANY WAY UNLESS IT IS THEIRS UNDER THE DIRECTION OF A REGISTERED ARCHITECT. THE ALTERATION WILL AFFIX HIS SEAL AND THE NOTATION "ALTERED BY" FOLLOWED BY HIS SIGNATURE AND DATE OF ALTERATION AND A SPECIFIC DESCRIPTION OF THE ALTERATION.

Michael Muroff Architect, LLC
333 Hudson Street
Suite 501
New York, NY 10013
Tel: 646. 230. 7111
Fax: 646. 230. 7277
NY Licence #015011

221-227
EAST 138th STREET

NYC DOB BIN: 2000973, 2000974
Block: 2340 Lots: 56, 58

UNDERPINNING SEQUENCE
AND
SLOPE SECTION

Date: 7-31-15
Scale: As Noted
Drawing By: DDT
Checked By: JAG

SOE-102.00

SHEET # 3 OF 4

©

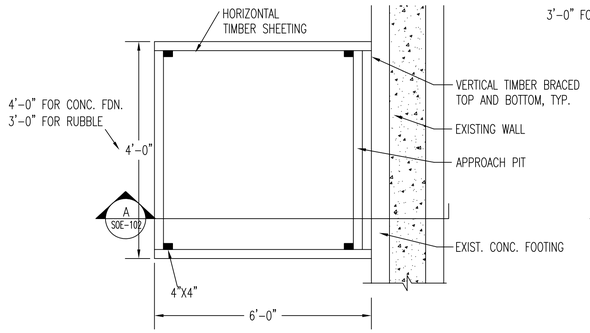

PLAN
SCALE: N.T.S.

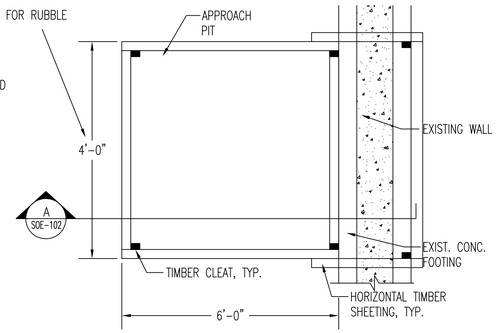

PLAN
SCALE: N.T.S.

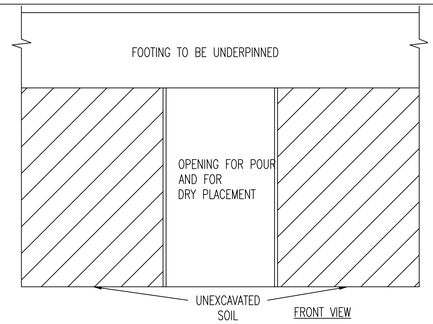

UNDERPINNING DETAIL
SCALE: 1/2"=1'-0"

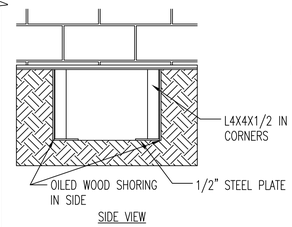

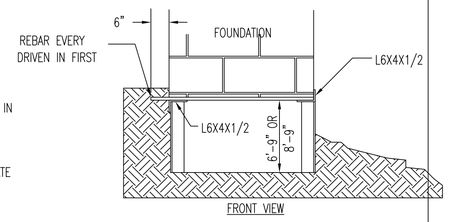

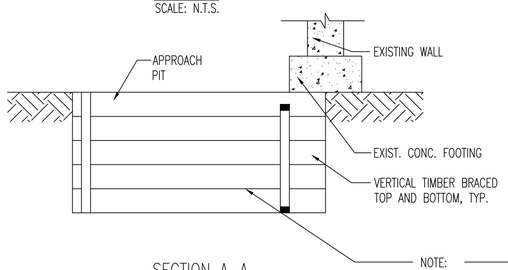

SECTION A-A
SCALE: N.T.S.

STAGE 1

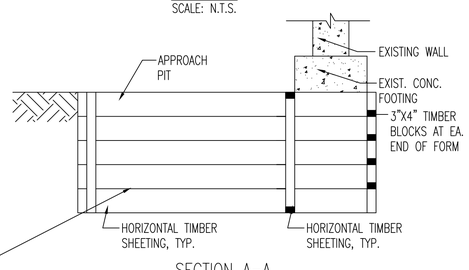

SECTION A-A
SCALE: N.T.S.

STAGE 2

NOTE:
USE 3X10'S UP TO 10'-0" DEPTH
USE 4X10'S UP TO 16'-0" DEPTH

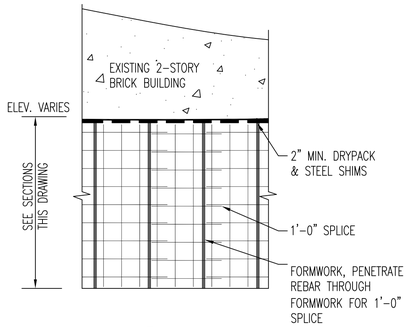

A
SOE-103
DETAIL
SCALE: N.T.S.

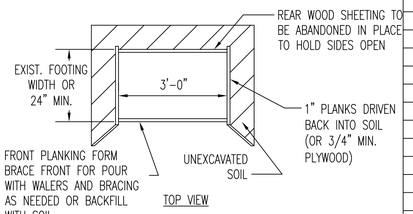

SUPPORT DETAILS IF DETERMINED NECESSARY BY ENGINEER
SCALE: 1/2"=1'-0"

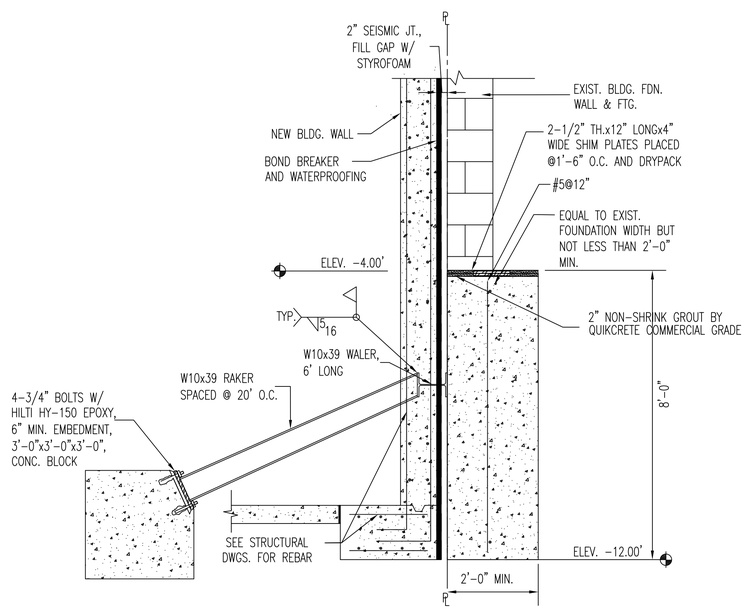

3
SOE-102
SECTION
SCALE: N.T.S.

THE SEQUENCE FOR COMPLETION OF THE WALERS AND RAKERS AT MYRTLE AVENUE

1. CONTRACTOR TO INSTALL 3'x3'x3' HEEL BLOCK FOOTING FIRST.
2. THEN BACKFILL SOIL ALONG EXPOSURE 4 WILL REMAIN AT THE HEIGHT OF THE WALER.
3. EXCAVATE THE SOIL BACKFILL ONLY ENOUGH TO ALLOW THE INSTALLATION OF AN INDIVIDUAL RAKER.
4. INSTALL AND WELD IN PLACE THE RAKER STARTING AT THE REAR SIDE OF THE BUILDING.
5. PROCEED TO INSTALL EACH RAKER IN A SIMILAR MANNER UNTIL ALL THE WALERS ARE SUPPORTED BY WELDED-IN-PLACE RAKERS.
6. INSTALL THE RAKER FOR THAT SECTION OF WALER AND WELD IN PLACE.
7. REPEAT FOR ALL THE NECESSARY SECTIONS OF WALER UNTIL ALL THE WALERS AND RAKERS ARE IN PLACE.
8. EXCAVATE DOWN TO THE FINAL ELEVATION ONLY AFTER ALL THE WALERS AND THE RAKERS ARE IN PLACE.
9. CONSTRUCT AND POUR THE FOUNDATION UTILIZING BOND BREAKER BETWEEN THE UNDERPINNING AND THE FOUNDATION EDGE USING A MINIMUM 3/8" XPS INSULATION BOND BREAKER. CONTRACTOR CAN LEAVE CUT OUTS 2' AROUND THE RAKER LOCATIONS.
10. INSTALL THE WATER PROOFING BOND BREAKER AND XPS INSULAITON ALONG THE REST OF THE WALL WHERE THE WALL POUR IS GOING TO TAKE PLACE AND REMOVE AN EXCESS PORTION OF THE WALER LEAVING A TWO FOOT PORTION OF WALER WITHOUT REMOVING THE RAKER.
11. POUR A WALL AROUND THE WALER AND RAKER ATTACHMENT POINT TO A HEIGHT OF THE FIRST FLOOR PLATE.
12. POUR FIRST FLOOR PLATE LEAVING HOLES FOR RAKERS TO REMAIN.
13. AFTER FIRST FLOOR IS POURED THE REMAINING WALERS AND RAKERS CAN BE REMOVED AND THE HOLES IN THE FLOOR REBAR SPLICED AND POURED.

REVISIONS

NO.	DESCRIPTIONS	DATE

NO.	TO WHOM ISSUED	DATE
1	DOB	-

ISSUES

Tahoe Development Group LLC
8217 153rd Avenue
Howard Beach, NY 11414
Owner
Anthony Gurino
718 835 4700

Michael Muroff Architect, LLC
333 Hudson Street, Suite 501
New York, NY 10013
Architect
Michael Muroff
646 230 7111

Structural Engineering Systems, PLLC
214-41 42nd Avenue, Suite 2B
Bayside, NY 11361
Structural Engineer
Joseph Gulino
718 224 7161

S. Schwartz Engineering, PLLC
15 West 39th Street, Suite PH
New York, NY 10018
MEP Engineer
Simon Schwartz
212 695 3509

THIS DRAWING IS AN INSTRUMENT OF SERVICE AND SHALL REMAIN THE PROPERTY OF MICHAEL MUROFF ARCHITECT,LLC. WHETHER THE PROJECT FOR WHICH IT IS PREPARED IS EXECUTED OR NOT. THE RIGHTS OF MICHAEL MUROFF ARCHITECT,LLC. ARE THE COMMON LAW RIGHTS OF ARTISTS. THE DRAWING MAY BE USED FOR COMPLETION OF THIS PROJECT BY OWNER EXCEPT BY AGREEMENT IN WRITING WITH MICHAEL MUROFF ARCHITECT,LLC. SUBMISSION OR DISTRIBUTION TO MEET OFFICIAL REGULATORY REQUIREMENTS OR FOR OTHER PURPOSES IN CONNECTION WITH THE PROJECT IS NOT TO BE CONSTRUED AS PUBLICATION IN DEROGATION OF THE RIGHTS OF MICHAEL MUROFF ARCHITECT,LLC. REPRODUCTION OR PUBLICATION BY ANY METHOD IN WHOLE OR IN PART IS PROHIBITED. TITLE TO THIS DRAWING BELONGS TO MICHAEL MUROFF ARCHITECT,LLC. WITHOUT PREJUDICE.

THE FIRM OF MICHAEL MUROFF ARCHITECT,LLC. HAS NOT BEEN RETAINED TO DO FIELD SUPERVISION OR INSPECTION. THE FIRM OF MICHAEL MUROFF ARCHITECT,LLC. IT'S PRINCIPLES, EMPLOYEES, AND CONSULTANTS HAVE NOT BEEN RETAINED TO PROVIDE ANY SERVICES RELATED TO ASBESTOS, TOXIC WASTE, OR HAZARDOUS MATERIALS. THESE REMOVAL, ABATEMENTS, OR DECONTAMINATIONS, MICHAEL MUROFF ARCHITECT,LLC. IT'S, DO NOT SPECIFY OR MAKE RECOMMENDATIONS FOR ASBESTOS, TOXIC WASTE, OR HAZARDOUS MATERIALS. THE OWNER OF THIS BUILDING HAS RETAINED AN INDEPENDENT ASBESTOS CONSULTANT. ALL INQUIRIES SHOULD BE DIRECTED TO THE OWNER OR HIS ASBESTOS CONSULTANT. IT IS A VIOLATION OF THE PROFESSIONAL LICENSE LAW FOR ANY PERSON TO ALTER THIS DRAWING IN ANY WAY, UNLESS ACTING UNDER THE DIRECTION OF A REGISTERED ARCHITECT. THE ALTERING ARCHITECT SHALL AFFIX HIS SEAL AND THE NOTATION "ALTERED BY" FOLLOWED BY HIS SIGNATURE AND DATE OF ALTERATION AND A SPECIFIC DESCRIPTION OF THE ALTERATION.

Michael Muroff Architect, LLC
333 Hudson Street
Suite 501
New York, NY 10013
Tel: 646. 230. 7113
Fax: 646. 230. 7277
NY Licence #015011

221-227
EAST 138th STREET

NYC DOB BIN: 2000973, 2000974
Block: 2340 Lots: 56, 58

UNDERPINNING SECTION AND DETAILS

Date: 7-31-15
Scale: As Noted
Drawing By: DDT
Checked By: JAG

SOE-103.00

SHEET # 4 OF 4

©

GENERAL NOTES

1. ALL CONSTRUCTION METHODS SHALL COMPLY WITH THE REQUIREMENTS OF CHAPTER 33 OF THE NEW YORK CITY BUILDING CODE 2014 FOR THE "SAFE GUARD DURING CONSTRUCTION & DEMOLITION."
2. THE CONTRACTOR SHALL COMPLY WITH THE LATEST NEW YORK CITY BUILDING CODE 2008 AND ALL OTHER GOVERNING CODES AND REGULATIONS.
3. THE CONTRACTOR SHALL VERIFY ALL CONDITIONS AND DIMENSIONS IN THE FIELD AND BE RESPONSIBLE FOR ACCURATE COORDINATION. ANY DISCREPANCIES SHALL BE REPORTED TO THE ENGINEER OF RECORD BEFORE PROCEEDING.
4. PATCH AND REPAIR EXISTING CONDITIONS DAMAGED DURING THE COURSE OF NEW CONSTRUCTION AT NO EXTRA COST TO THE OWNER.
5. ALL DIMENSIONS AND LOCATIONS OF EXISTING STRUCTURAL AND ARCHITECTURAL ELEMENTS SHALL BE VERIFIED BY THE CONTRACTOR AND COORDINATED WITH THE NEW STRUCTURAL ELEMENTS PRIOR TO DEMOLITION, FABRICATION AND CONSTRUCTION.
6. EXISTING CONSTRUCTION AND DIMENSIONS SHOWN ARE PER INFORMATION BY THE OWNER, BY FIELD MEASUREMENT, OR ARE ASSUMED. ALL EXISTING INFORMATION MUST BE VERIFIED IN THE FIELD PRIOR TO FABRICATION. THE OWNER'S REPRESENTATIVE AND STRUCTURAL ENGINEER ARE NOT RESPONSIBLE FOR ACCURACY OF THE INFORMATION. EXISTING CONSTRUCTION AT AREAS WHERE NEW WORK IS NOT CONTEMPLATED MAY NOT BE COMPLETELY SHOWN.
7. TEMPORARY BRACING OR SHORING SHALL BE PROVIDED WHEREVER REQUIRED TO SUPPORT LOADS AS MAY BE IMPOSED UPON THE STRUCTURE DURING CONSTRUCTION. PROVIDE TEMPORARY SHORING WHEREVER REQUIRED DUE TO CONSTRUCTION SEQUENCING FOR THE SUPPORT OF THE STRUCTURE PRIOR TO INSTALLATION OF NEW SUPPORT STEEL. SUCH BRACING AND SHORING SHALL BE THE SOLE RESPONSIBILITY OF THE CONTRACTOR AND SHALL REMAIN IN PLACE AS LONG AS REQUIRED TO MAINTAIN SAFETY.
8. SUBMIT SHOP DRAWINGS ON STEEL, CONCRETE, MIX DESIGNS, METAL DECK REBAR AND JOISTS, ETC.
9. THE CONTRACTOR SHALL NOT SCALE DRAWINGS, USE DIMENSIONS AS GIVEN ON PLANS AND DETAILS.
10. ALL SHEATHING AND ALL FORMWORK SHALL BE DESIGNED AND FILED BY A NEW YORK STATE PROFESSIONAL ENGINEER EMPLOYED BY THE CONTRACTOR.
11. ALL OPENINGS IN THE SLABS ARE TO BE COORDINATED BY THE CONTRACTOR WITH THE MECHANICAL, ARCHITECTURAL AND PLUMBING FINAL APPROVED SHOP DRAWINGS.
12. IF A CONFLICT SHOULD ARISE BETWEEN DRAWINGS AND SPECIFICATIONS, THE MORE RESTRICTED DETAIL SHALL APPLY.

STRUCTURAL STEEL NOTES

1. ALL STRUCTURAL STEEL TO BE ASTM A992, Fy=50 KSI. CONTRACTOR TO SUBMIT MILL CERTIFICATES FOR ALL STEEL. ALL BEAMS RESTING ON MASONRY WALL SHALL HAVE A 12"X8"X5/8" TH. BEARING PLATE WITH L 4X4X1/4 FOR ANCHORAGE.
2. THE CONTRACTOR SHALL HIRE A NEW YORK STATE LICENSED ENGINEER TO DESIGN ALL STEEL CONNECTIONS AND SUBMIT CALCULATIONS SIGNED AND SEALED TO THE ENGINEER OF RECORD FOR REVIEW AND APPROVAL PRIOR TO SHOP DRAWING SUBMISSIONS, ANY FABRICATION AND ERECTION OF STEEL.
3. USE 3/4"ø A325 S.C. HIGH STRENGTH BOLTS.
4. USE E70xx ELECTRODE FOR WELDING. ALL WELDING TO BE PERFORMED BY A NEW YORK STATE LICENSED WELDER.
5. PROVIDE A 2-HOUR FIRE RATING WITH SPRAYED ON FIRE PROOFING FOR ALL STRUCTURAL STEEL.
6. NO OPENINGS ARE TO BE MADE IN THE STEEL BEAMS OR COLUMNS WITHOUT WRITTEN PERMISSION FROM ENGINEER OF RECORD.
7. TEMPLATES ARE TO BE PROVIDED FOR ALL ANCHOR BOLTS CAST IN CONCRETE.
8. ALL LOOSE STEEL LINTELS FOR MASONRY OPENINGS AND BUILDING FACADE OPENINGS SHALL BE GALVANIZED.
9. CONTRACTOR SHALL FILE AN AFFIDAVIT FROM THE MANUFACTURER OF STRUCTURAL STEEL, CERTIFYING THAT THE STEEL MEETS THE MINIMUM REQUIREMENTS FOR STRUCTURAL STEEL AS DEFINED AISC AND NYCBC RS10-5.
10. THE STRUCTURAL STEEL FRAMING AND DETAILING SHALL CONFORM TO AISC SPECIFICATION FOR DESIGN FABRICATION AND ERECTION.
11. ALL STRUCTURAL STEEL SHALL RECEIVE, IF NOT SPRAYED ON FIREPROOFED ONE COAT OF RUST INHIBITOR PAINT, FIELD TOUCH-UP AS REQUIRED.
12. ALL WELDING SHALL BE DONE BY LICENSED WELDERS IN ACCORDANCE WITH C26-381-0 OF THE NYCBC.
13. GENERAL CONTRACTOR SHALL SUBMIT SHOP DRAWINGS SIGNED AND SEALED BY STRUCTURAL ENGINEER THE PROPOSED FRAMING & CONNECTIONS FOR OWNER & ENGINEER APPROVAL PRIOR TO FABRICATION.
14. CONTRACTOR TO PROVIDE 5/8"ø PUDDLE WELD @ 12" O.C. ALONG METAL DECK AND BEAM TOP FLANGE. PROVIDE METAL DECK FOR THREE CONTINUOUS SPANS.

VISIT TO SITE

1. ALL CONTRACTORS MUST VISIT THE SITE AND NOTE ALL EXISTING CONDITIONS AS WELL AS ALL CONDITIONS TO BE MET BEFORE SUBMITTING BID. LACK OF THOROUGH UNDERSTANDING OF THE PROJECT REQUIREMENTS SHALL NOT CONSTITUTE AN EXCUSE FOR ERRORS OR OMISSIONS, NOR JUSTIFY A REQUEST FOR EXTRA COMPENSATION.

SHOP DRAWINGS

1. SUBMIT THREE PRINTS EACH OF ALL SHOP DRAWINGS FOR REVIEW. THE ENGINEER WILL RETAIN ONE COPY, SEND TWO COPIES TO THE ARCHITECT, WHO WILL RETURN ONE COPY TO THE CONTRACTOR FOR HIS REPRODUCTION AND DISTRIBUTION TO ALL OTHERS REQUIRING COPIES. THE ENGINEER WILL NOT MARK MORE THAN THE ABOVE THREE COPIES. SHOP DRAWINGS MUST BE CHECKED BY THE DETAILER PRIOR TO SUBMISSION; FAILURE TO DO SO WILL BE CAUSE FOR REJECTION. DETAILS MUST BE ON SHEETS OF AT LEAST 24"X36" IN SIZE WITH COMBINATIONS OF SIMILAR TYPE MEMBERS. THE ENGINEER WILL NOT REVIEW SMALLER SIZE SHEETS AS WELL AS THOSE CONTAINING ONLY ONE PIECE MARK. IF IT IS DESIRED TO USE OTHER THAN THIS TYPE OF DETAILING, APPROVAL MUST BE REQUESTED AT THE TIME OF BIDDING.
2. REPRODUCTION OF STRUCTURAL CONTRACT DOCUMENTS ARE NOT TO BE SUBMITTED AS ERECTION PLANS.
3. ALL REVISIONS TO SHOP DRAWINGS AFTER THE FIRST SUBMISSION MUST BE SO IDENTIFIED ON SUBSEQUENT SUBMISSIONS.
4. REVIEW OF SHOP DRAWINGS SHALL NOT RELIEVE THE CONTRACTOR OF ANY CONTRACT REQUIREMENT, EVEN IF SUCH ITEMS ARE NOT SHOWN ON THE SHOP DRAWINGS.
5. ANY CHANGES, PROPOSED BY THE DETAILER, MUST BE CLEARLY IDENTIFIED ON THE SHOP DRAWINGS AND UPON, REQUEST OF THE ENGINEER, SUBSTANTIATED BY SUBMISSION OF THE CALCULATIONS USED USED TO DESIGN SUCH CHANGE.
6. ALL SUBCONTRACTORS MUST WORK WITH A FULL SET OF DRAWINGS, INCLUDING ARCHITECTURAL AND MECHANICAL. IT IS THE SUBCONTRACTOR'S RESPONSIBILITY TO REQUEST ANY DRAWINGS NOT FURNISHED BY THE GENERAL CONTRACTOR.
7. CONTRACTORS SHALL SUBMIT SHOP DRAWINGS FOR REVIEW AT LEAST TEN WORKING DAYS PRIOR TO THE REQUIRED DATE FOR RETURN FROM REVIEW. THE CONTRACTOR WILL BE REPSONSIBLE FOR DEADLINES MISSED DUE TO LATE SHOP DRAWING SUBMISSION.
8. CONTRACTORS SHALL SUBMIT SHOP DRAWINGS FOR REVIEW OF STRUCTURAL STEEL, CONCRETE, INCLUDING ALL WALL ELEVATIONS, BEAM POCKETS, COLUMN POCKETS, ETC., CONCRETE REINFORCEMENT AND METAL DECK.

FOUNDATION NOTES

1. CONTRACTOR SHALL CHECK AND COORDINATE STRUCTURAL DRAWINGS WITH ARCHITECTURAL, MECHANICAL AND OTHER TRADES.
2. IN ANY CASE OF CONFLICT BETWEEN THE FOUNDATION NOTES AND SPECIFICATIONS, THE MORE RIGID REQUIREMENTS SHALL GOVERN.
3. THE CONTRACTOR SHALL BE RESPONSIBLE TO ADEQUATELY PROTECT ALL EXCAVATION SLOPES.
4. DOWELS FROM FOOTING INTO WALLS ABOVE SHALL MATCH VERTICAL WALL REINFORCEMENT AND SHALL BE EXTENDED 48XBAR DIA. ABOVE TOP OF FOOTING UNLESS OTHERWISE NOTED.
5. THE CONTRACTOR, DURING THE PROGRESS OF THE WORK, SHALL PROVIDE, OPERATE AND MAINTAIN ALL REQUIRED PUMPS, SUCTION AND DISCHARGE LINES, WELL POINT INSTALLATIONS, ETC., AND POWER IN SUFFICIENT NUMBER AND CAPACITY TO KEEP ALL EXCAVATIONS, PITS, TRENCHES, COLUMN FOUNDATIONS, THE BASEMENT AREA AND THE ENTIRE PROPERTY AREA FREE FROM WATER ENTERING THE PREMISES FROM ANY SOURCE WHATEVER, AND UNDER ANY AND ALL CIRCUMSTANCES AND CONTINGENCIES THAT MAY ARISE.
6. ALL REINFORCEMENT SHALL BE SECURELY HELD IN PLACE WHILE POURING CONCRETE. IF REQUIRED, ADDITIONAL BARS AND STIRRUPS SHALL BE PROVIDED BY THE CONTRACTOR TO FURNISH SUPPORT FOR ALL BARS.
7. HORIZONTAL CONSTRUCTION JOINTS IN SLABS AND BEAMS SHALL NOT BE PERMITTED, UNLESS OTHERWISE NOTED.
8. ALL PLUMBING SLOTS SHALL BE FILLED WITH CONCRETE TO THE SAME DEPTH AS THE FLOOR SLAB AFTER PIPING IS INSTALLED.
9. PIPES OR CONDUITS PLACED IN SLABS SHALL NOT HAVE AN OUTSIDE DIAMETER LARGER THAN 1/3 THE SLAB THICKNESS AND SHALL NOT BE PLACED CLOSER THAN 3 DIAMETERS ON CENTERS. ALUMINUM CONDUITS SHALL NOT BE PLACED IN CONCRETE.
10. WORK, NOT INDICATED ON A PART OF A DRAWING BUT REASONABLY IMPLIED TO BE SIMILAR TO THAT SHOWN AT CORRESPONDING PLACES, SHALL BE REPEATED.
11. ALL FILLED AREAS SHALL BE COMPACTED LAYER BY LAYER NOT LESS THAN 95% OF THE MAXIMUM DRY DENSITY WHEN TESTED IN ACCORDANCE WITH ASTM D1557.
12. PROVIDE STEPPED FOOTINGS, AS PER DETAIL, WHERE NECESSARY.
13. CONTRACTOR SHALL SUBMIT PLAN SHOWING POURING SEQUENCE AND TYPE AND LOCATION OF PROPOSED JOINTS IN ALL SLABS TO ENGINEER FOR APPROVAL.
14. NO HORIZONTAL JOINTS ARE PERMITTED IN CONCRETE WALLS. PROVIDE VERTICAL JOINTS IN WALLS AT 40'-0" MAXIMUM SPACING. AT LEAST 24 HOURS HOURS SHALL ELAPSE BEFORE PLACING ADJACENT POUR.
15. CONCRETE PROTECTION FOR REINFORCING STEEL SHALL BE AS FOLLOWS:
    A. WALLS, INSIDE FACE.....1"
    B. WALLS, EXTERIOR FACE (AGAINST EARTH).....2"
    C. CONCRETE PLACED ON EARTH.....3"
16. FOOTING ELEVATIONS SHOWN ON PLAN ARE ASSUMED TO BE LOCATED IN GOOD BEARING SOIL. ACTUAL FIELD CONDITIONS, AS FOUND, SHALL GOVERN. RAISE OR LOWERING FOOTINGS AS REQUIRED TO FOLLOW THE INTENT OF THESE DRAWINGS AND SPECIFICATIONS ON THE BASIS OF UNIT PRICES.
17. WHEN FINISHED GRADE IS 2'-0" OR GREATER BELOW TOP OF FLOOR SLAB, PROVIDE TEMPORARY FOUNDATION WALL BRACING ALONG THE FOUNDATION WALL SIMULTANEOUSLY. BRACING TO REMAIN UNTIL ALL CONCRETE SLABS ARE IN PLACE.
18. SOIL UNDER FOOTINGS SHALL BE PROTECTED FROM FREEZING.
19. BOTTOMS OF ALL EXTERIOR FOOTINGS SHALL BE AT LEAST 4'-0" BELOW FINISHED GRADE.
20. CHANGES OF LEVEL OF FOOTINGS MUST BE KEPT WITHIN THE SAFE ANGLE OF REPOSE OF THE SOIL (ONE VERTICAL TO TWO HORIZONTAL).
21. PROVIDE 6" POROUS FILL UNDER ALL SLABS ON EARTH (POROUS FILL TO BE 3/4" CRUSHED STONE OR GRAVEL).
22. PROVIDE CONTRACTION JOINTS AT ALL RE-ENTRANT CORNERS. PROVIDE DIAMOND SHAPED ISOLATION JOINTS AROUND COLUMNS. JOINTS TO BE SAWCUT IMMEDIATELY AFTER CONCRETE HAS SUFFICIENTLY HARDENED.
23. CONTRACTOR SHALL ADEQUATELY PROTECT WALLS, PIERS, ETC., FROM DAMAGE DUE TO BACKFILLING.
24. CONTRACTOR MUST PREVENT THE FOUNDATIONS FROM BEING PUT IN JEOPARDY BY THE EXCAVATIONS FOR UTILITIES, ETC.
25. WHERE PIPES PASS THROUGH NEW WALLS, DROP FOOTINGS SO THAT PIPES PASS OVER THE TOP OF THE FOOTING.
26. DEWATERING PROCEDURES, IF REQUIRED, SHALL NOT DISTURB THE SOIL STRUCTURE.
27. BACKFILL MUST BE CLEAN, WELL DRAINING GRANULAR SOILS. BACKFILL SHOULD BE PLACED IN LIFTS OF 12 INCHES MAX. THICKNESS, U.O.N., AND BE UNIFORMLY COMPACTED TO AT LEAST 95% OF THE MAXIMUM DRY DENSITY AS DETERMINED BY THE ASTM D-1557 TEST PROCEDURE, OR TO A GREATER DEGREE IF SPECIFIED ELSEWHERE. THE TOTAL UNIT WEIGHT OF THE BACKFILL AT ITS OPTIMUM MOISTURE CONTENT, AS DETERMINED BY ASTM D-1557, SHALL NOT BE GREATER THAN 125 PCF.
28. POUR SLABS ON GRADE IN ALTERNATE PATTERNS NOT EXCEEDING 30 FEET IN LENGTH AND 900 SQUARE FEET IN AREA OR USE CONTROL JOINTS AT 20 FEET ON CENTER.
29. DO NOT BACKFILL BASEMENT OR RETAINING WALLS WITHOUT AUTHORIZATION OF THE ENGINEER. FLOOR SLABS PROVIDING SUPPORT FOR SUCH WALLS MUST BE IN PLACE PRIOR TO BACKFILLING, OR DIAGONAL BRACING MUST BE PROVIDED TO HOLD THE FULL FORCE OF THE BACKFILL UNTIL THE FLOOR SLABS HAVE ATTAINED FULL STRENGTH.

STEEL FLOOR DECKS

1. ALL STEEL DECKS SHALL BE CONTINUOUS OVER AT LEAST FOUR STRUCTURAL SUPPORTS AND WELDED THERETO WITH PLUG WELDS MADE THROUGH WELDING WASHERS PLACED IN THE BOTTOM OF THE RIBS.
2. ALL END LAPS SHALL BE STAGGERED AND OCCUR OVER A STRUCTURAL SUPPORT.
3. STEEL DECKS SHALL HAVE INTERLOCKING SIDE LAPS AND BE MECHANICALLY FASTENED AT 3'-0" MAXIMUM SPACING.
4. ALL STEEL DECKS SHALL BE GLAVANIZED AND CAPACBLE OF SUPPORTING ALL CONSTRUCTION LOADS (ASTM A525 G60).
5. METAL DECK FOR ALL FLOORS SHALL BE AS NOTED ON PLANS OR AN APPROVED EQUAL, AND SHALL BE WELDED AT 12" O.C. MAXIMUM TO SUPPORTING MEMBERS. USE MANUFACTURER'S STANDARD APPROVED WELDING WASHERS FOR 20 GAGE DECK AND LIGHTER.
6. TOP FLANGES OF DECK SHALL BE LEVEL WHEN TESTED WITH A 4'-0" STRAIGHTEDGE.
7. DECK ERECTOR SHALL CUT ALL OPENINGS IN THE FLOOR DECK WHICH ARE SHOWN ON THE ARCHITECTURAL DRAWINGS, AND ARE REQUIRED BY MECHANICAL TRADES.
8. PROVIDE 18 GAGE POUR STOPS AS REQUIRED TO CONTAIN THE CONCRETE POUR, INCLUDING PERIMETER POUR STOPS, UNLESS OTHERWISE NOTED ON PLANS.

MASONRY NOTES

1. ALL MORTAR TO BE TYPE M BELOW GROUND AND TYPE S ABOVE GROUND.
2. MASONRY TO BE LAID IN RUNNING BOND.
3. MASONRY CONSTRUCTION AND MATERIALS SHALL CONFORM TO ALL REQUIREMENTS OF ACI 530-02/ASCE 6-02 CODE.
4. CONCRETE MASONRY UNITS (CMU) SHALL CONFORM TO ASTM C90 GRADE N, TYPE 1,"MOISTURE CONTROLLED" UNITS. MINIMUM AVERAGE NET AREA COMPRESSIVE STRNEGTH FROM 1,900 TO 4,000 PSI. UNITS SHALL BE NORMAL WEIGHT AND WEIGH 135 PCF, SEE SCHEDULE FOR INFORMATION.
5. MASONRY SHALL BE PROTECTED AGAINST FREEZING AS PER RS 10-1 AND SECTION 11 OF THE NYCBC.
6. MASONRY UNITS SHALL BE CLEARLY IDENTIFIED TO SHOW THE GRADE OF THE UNIT AND THE COMPRESSIVE STRENGTH, AS REQUIRED ON PLANS, AS PER NYCBC 2008.

CONCRETE NOTES

1. ALL CONCRETE SHALL NOT BE LESS THAN 4000 PSI COMPRESSIVE STRENGTH WHEN TESTED AT TWENTY EIGHT (28) DAYS AND WITH A UNIT WEIGHT OF 145 PCF, U.O.N.
2. ALL REINFORCING BARS SHALL CONFORM TO ASTM A615-GRADE 60.
3. ALL WELDED WIRE FABRIC (WWF) SHALL BE 6X6-W2.9XW2.9 CONFORMING TO STANDARDS OF ASTM A785.
4. ALL CONCRETE REINFORCEMENT SHALL BE DETAILED, FABRICATED, LABELED, SUPPORTED AND SPACED IN FORMS AND SECURED IN PLACE IN ACCORDANCE WITH THE PROCEDURES AND REQUIREMENTS OUTLINED IN THE LATEST EDITION OF THE "BUILDING CODE REQUIREMENTS FOR REINFORCED CONCRETE", ACI 318 AND THE "MANUAL OF STANDARD PRACTICE FOR DETAILING REINFORCED CONCRETE STRUCTURES", ACI 315.
5. THE CONRACTOR SHALL VERIFY ALL DRAWINGS FOR COORDINATION BETWEEN TRADES, LOCATE BOLTS AND SLEEVES AND TRENCHES AS REQUIRED FOR MECHANICAL TRADES, PROVIDE ONE OR INSTALL ANCHORS, INSTALL ANCHOR INSERTS, HANGERS, ETC. AS REQUIRED FOR VARIOUS TRADES.
6. THE CONTRACTOR SHALL SUBMIT SHOP DRAWINGS OF REINFORCEMENT DETAILS FOR APPROVAL BEFORE PROCEEDING WITH THE WORK. THE CONTRACTOR SHALL CHECK ALL DIMENSIONS AND ACCEPT FULL RESPONSIBILITY FOR DIMENSIONAL CORRECTNESS.
7. ALL STRUCTURAL CONCRETE CONSTRUCTION AS DEFINED BY SECTION C26-1000.600F OF THE NYC BUILDING CODE SHALL BE CONTINUOUSLY INSPECTED AT THE JOB SITE AND THE BATCH PLANT BY QUALIFIED INSPECTORS UNDER THE SUPERVISION OF A LICENSED PROFESSIONAL ENGINEER IN ACCORDANCE WITH CONTROLLED INSPECTION REQUIREMENTS OF THE BUILDING CODE.
8. EACH LOAD OF CONCRETE AT THE BATCH PLANT SHALL BE CERTIFIED AS TO ACTUAL WEIGHT OF MATERIAL, WATER CEMENT RATIO, CONFORMANCE TO DESIGN MIX AS ADJUSTED FOR MOISTURE CONTENT AND GRADUATION, CONFORMANCE OF MATERIALS TO R.S. 10-3, ETC. ATTESTATION OF THESE RESULTS BY THE PLANT INSPECTOR. PRODUCER SHALL ACCOMPANY EACH LOAD OF CONCRETE DELIVERED TO THE JOB SITES AS PER N.Y.C. BUILDING CODE 2014.
9. ON SITE INSPECTION OF CONCRETE CONSTRUCTION SHALL INCLUDE THE FOLLOWING:

A. THE SIZE AND DIMENSIONS OF THE CONCRETE MEMBERS FORMED, THE SIZES AND POSITION OF THE REINFORCEMENT IN PLACE AND CURING METHODS EMPLOYED.
B. FOUR (4) SAMPLES OF CONCRETE FOR EACH 50 YARDS OF CONCRETE SHALL BE TAKEN FROM THE MIXER AND TESTED IN COMPRESSION IN ACCORDANCE WITH ASTM C39-61 AND TESTED IN 28 DAYS.
C. FROM THE CONCRETE SAMPLES ABOVE RECORDS OF SLUMP, AIR CONTENT, UNIT WEIGHT AND TEMPERATURE SHALL BE MADE AND REPORTED TO THE DEPARTMENT OF BUILDINGS WITH THE COMPRESSION TESTS.

10. FORM WORK AND BRACING OF EXCAVATIONS SHALL COMPLY FULLY WITH N.Y.C. BUILDING CODE.
11. ALL CONCRETE IN ITS FINAL FORM EXPOSED TO THE WEATHER SHALL BE AIR ENTRAINED.
12. CONCRETE COVER SHALL BE IN ACCORDANCE WITH ACI-318-11.
13. ALL CONCRETE, INCLUDING FOUNDATION WORK, IS TO BE VIBRATED. PROPER USE OF VIBRATORS IS A MUST. VIBRATORS SHALL NOT BE USED TO TRANSPORT CONCRETE.
14. ALL EMBEDMENTS, INCLUDING ANCHOR BOLTS, SHALL BE IN PLACE PRIOR TO POURING CONCRETE.
15. CONCRETE SHALL BE PLACED IN ACCORDANCE WITH ACI304, LATEST EDITION. CONCRETE SHALL NOT BE SUBJECT TO DROPS IN EXCESS OF 5 FEET.
16. REFER TO DRAWING T-000 FOR REQUIRED NYC SPECIAL INSPECTIONS.

WIND DESIGN DATA

1. BASIC WIND SPEED (3 SECOND GUST): V_W = 110 MPH
2. WIND IMPORTANCE FACTOR : I = 1.0
3. STRUCTURAL OCCUPANCY CATEGORY / RISK CAT: 2
4. BASE SHEAR : V = 90 KIPS

SNOW DESIGN DATA

1. GROUND SNOW LOAD : P_g = 25 PSF

LIST OF ABBREVIATIONS & LEGEND

FTG.	–	FOOTING
U.O.N.	–	UNLESS OTHERWISE NOTED
U.N.O.	–	UNLESS NOTED OTHERWISE
N.T.S.	–	NOT TO SCALE
P.A.F.	–	POWDER ACTUATED FASTENER
PSI	–	POUNDS PER SQUARE INCH
PSF	–	POUNDS PER SQUARE FOOT
PCF	–	POUNDS PER CUBIC FOOT
O.C.	–	ON CENTER
OPNG.	–	OPENING
MAX.	–	MAXIMUM
TYP.	–	TYPICAL
SQ.	–	SQUARE
EA.	–	EACH
E.W.	–	EACH WAY
E.F.	–	EACH FACE
H.S.	–	HIGH STRENGTH
TH.	–	THICK
EXIST.	–	EXISTING
CONT.	–	CONTINUOUS
COL.	–	COLUMN
@	–	AT
℄	–	PLATE
MC	–	FULL MOMENT CONNECTION OF MEMBER
NYCBC	–	NEW YORK CITY BUILDING CODE
DWG.	–	DRAWING
T.O.S.	–	TOP OF SLAB
(P)	–	POST DOWN
(P)	–	POST UP
1 / S-3.0		SECTION NO. DWG. WHERE SECTION CAN BE FOUND. IF –, THEN SECTION IS ON THE SAME DWG.

SEISMIC NOTES

1. THIS BUILDING WAS DESIGNED FOR SEISMIC IN ACCORDANCE WITH THE 2014 NYC BUILDING CODE.
2. THE FOLLOWING PARAMETERS HAVE BEEN USED IN THE EAST-WEST (ORDINARY STEEL MOMENT FRAME) DIRECTION:
   R = 3.5
   SEISMIC USE GROUP: 1
   SITE CLASS: D
   IMPORTANCE FACTOR, I = 1.0
   SEISMIC DESIGN CATEGORY: B (STRUCTURAL OCCUPANCY)
   $S = 0.281g$
   $S_1 = 0.073g$
   $F_a = 1.57 \quad F_v = 2.40$
   $S_{DS} = \frac{2}{3}F_aS_s = 0.294g$
   $S_{D1} = \frac{2}{3}F_vS_1 = 0.117g$
   $C_s = S_{DS}/(R/I_e) = 0.084g$
   $V = (FS_{DS}/R)W = 123$ KIPS
   STRUCTURAL OCCUPANCY/RISK CAT: 2
3. THE FOLLOWING PARAMETERS HAVE BEEN USED IN THE NORTH-SOUTH (ORDINARY STEEL MOMENT FRAME) DIRECTION:
   R = 3.5
   SEISMIC USE GROUP: 1
   SITE CLASS: D
   IMPORTANCE FACTOR, I = 1.0
   SEISMIC DESIGN CATEGORY: B (STRUCTURAL OCCUPANCY)
   $S = 0.281g$
   $S_1 = 0.073g$
   $F_a = 1.57 \quad F_v = 2.40$
   $S_{DS} = \frac{2}{3}F_aS_s = 0.294g$
   $S_{D1} = \frac{2}{3}F_vS_1 = 0.117g$
   $C_s = S_{DS}/(R/I_e) = 0.084g$
   $V = (FS_{DS}/R)W = 123$ KIPS
   STRUCTURAL OCCUPANCY/RISK CAT: 2

LIST OF DRAWINGS

S-000.00	NOTES, LIST OF DRAWINGS AND LEGEND	S-011.00	ROOF FLOOR AND BULKHEAD ROOF FRAMING PLAN
FO-001.00	FOUNDATION PLAN	S-012.00	STEEL SECTIONS AND DETAILS I
FO-01A.00	FOUNDATION SECTIONS AND DETAILS I	S-013.00	STEEL SECTIONS AND DETAILS II
FO-01B.00	FOUNDATIONS SECTIONS AND DETAILS II	S-014.00	MASONRY WALL DETAILS I
S-001.00	FIRST FLOOR FRAMING PLAN	S-015.00	MASONRY WALL DETAILS II
S-002.00	SECOND FLOOR FRAMING PLAN	S-016.00	BRACING ELEVATIONS AND DETAILS
S-003.00	THIRD FLOOR FRAMING PLAN	S-017.00	MTA GENERAL NOTES
S-004.00	FOURTH FLOOR FRAMING PLAN	S-018.00	MTA INSURANCE NOTES
S-005.00	FIFTH FLOOR FRAMING PLAN	S-019.00	MTA PLAN
S-006.00	SIXTH FLOOR FRAMING PLAN	S-020.00	MTA SECTION
S-007.00	SEVENTH FLOOR FRAMING PLAN	S-021.00	EXSITING TA DRAWINGS
S-008.00	EIGHTH FLOOR FRAMING PLAN	S-02.00	BORING REPORT I
S-009.00	NINTH FLOOR FRAMING PLAN	S-023.00	BORING REPORT II
S-010.00	TENTH FLOOR FRAMING PLAN		

LOADING SCHEDULE (PSF)

LOAD \ FLOOR	BASEMENT	FIRST FLOOR	SECOND FLOOR	THIRD THRU NINTH FLOOR	TENTH FLOOR	TERRACE	BALCONY
SLAB & MTL. DK.	75	43	43	43	43	43	43
PARTITION	12	12	12	12	–	–	–
CEILING & MECHANICAL	–	10	10	10	10	–	–
FLOOR FINISH	3	5	5	5	5	5	5
ROOF FINISH	–	–	–	–	–	–	–
STEEL WEIGHT	–	10	10	10	10	10	10
TOTAL D.L.	90	68	68	68	68	68	68
*LIVE LOAD, L.L.	100	100	40	40	40	100	100
TOTAL D.L.+L.L	190	168	108	108	108	168	168

NOTE: * – LIVE LOAD NOT REDUCED

REVISIONS		
NO.	DESCRIPTIONS	DATE

ISSUES		
1	DOB	–
NO.	TO WHOM ISSUED	DATE

Tahoe Development Group LLC
8217 153rd Avenue
Howard Beach, NY 11414
Owner
Anthony Gurino
718 835 4700

Michael Muroff Architect, LLC
333 Hudson Street, Suite 501
New York, NY 10013
646 230 7111
Architect
Michael Muroff

Structural Engineering Systems, PLLC
214-41 42nd Avenue, Suite 2B
Bayside, NY 11361
Structural Engineer
Joseph Gulino
718 224 7161

S. Schwartz Engineering, PLLC
15 West 39th Street, Suite PH
New York, NY 10018
MEP Engineer
Simon Schwartz
212 695 3509

THIS DRAWING IS AN INSTRUMENT OF SERVICE AND SHALL REMAIN THE PROPERTY OF MICHAEL MUROFF ARCHITECT,LLC. WHETHER THE PROJECT FOR WHICH IT IS MADE IS EXECUTED OR NOT. THIS DRAWING SHALL NOT BE USED BY THE OWNER OR OTHERS ON OTHER PROJECTS FOR ADDITIONS TO THIS PROJECT OR FOR COMPLETION OF THIS PROJECT BY OTHERS EXCEPT BY AGREEMENT IN WRITING WITH MICHAEL MUROFF ARCHITECT,LLC. SUBMISSION OR DISTRIBUTION TO MEET OFFICIAL REGULATORY REQUIREMENTS OR FOR OTHER PURPOSES IN CONNECTION WITH THE PROJECT IS NOT TO BE CONSTRUED AS PUBLICATION IN DEROGATION OF MICHAEL MUROFF ARCHITECT,LLC. RIGHTS OR PROPERTY. MICHAEL MUROFF ARCHITECT,LLC. REPRODUCTION OR PUBLICATION BY ANY METHOD IN WHOLE OR IN PART IS PROHIBITED. TITLE TO THIS DRAWING BELONGS TO MICHAEL MUROFF ARCHITECT,LLC. WITHOUT PREJUDICE.

THE FIRM OF MICHAEL MUROFF ARCHITECT,LLC. WAS NOT BEEN RETAINED TO DO FIELD SUPERVISION OR INSPECTION. THE FIRM OF MICHAEL MUROFF ARCHITECT,LLC. ITS PRINCIPLES, EMPLOYEES, AND CONSULTANTS HAVE NOT BEEN RETAINED TO PROVIDE ANY SERVICES RELATED TO ASBESTOS, TOXIC WASTE, OR HAZARDOUS MATERIALS. THEIR RENTAL, AGREEMENTS, OR ENCAPSULATION. MICHAEL MUROFF ARCHITECT,LLC. DOES ALL DO NOT SPECIFY, OR MAKE RECOMMENDATIONS RELATED TO ASBESTOS IN ANY FORM. ASBESTOS EXPOSURE ASSESSMENTS, APPRAISAL, SAMPLING, OR TESTING IS NOT THE RESPONSIBILITY OF MICHAEL MUROFF ARCHITECT,LLC. ALL ASBESTOS ISSUES ARE OUTSIDE THE SCOPE OF THIS BUILDING AND REQUIRES AN INDEPENDENT ASBESTOS CONSULTANT. ALL INQUIRIES SHOULD BE DIRECTED TO THE OWNER OR AN ASBESTOS CONSULTANT. IT IS A VIOLATION OF THE PROFESSIONAL LICENSE LAW FOR ANY PERSON TO ALTER THIS DRAWING IN ANY WAY UNLESS ACTING UNDER THE DIRECTION OF A REGISTERED ARCHITECT. THE ALTERING ARCHITECT SHALL AFFIX HIS SEAL AND THE NOTATION "ALTERED BY" FOLLOWED BY HIS SIGNATURE AND DATE OF ALTERATION AND A SPECIFIC DESCRIPTION OF THE ALTERATION.

Michael Muroff Architect, LLC
333 Hudson Street
Suite 501
New York, NY 10013
Tel: 646. 230. 7111
Fax: 646. 230. 7272
NY Licence #015017

221-227 EAST 138th STREET

NYC DOB BIN: 2000973, 2000974
Block: 2340 Lots: 56, 58

NOTES, LIST OF DRAWINGS AND LEGEND

STATE OF NEW YORK · JOSEPH ANTHONY GULINO · 070916 · LICENSED PROFESSIONAL ENGINEER

Date: 1-14-15
Scale: As Noted
Project No. : 14-165
Drawing By: EGK
Checked By: JAG

S-000.00

SHEET # 1 OF 27

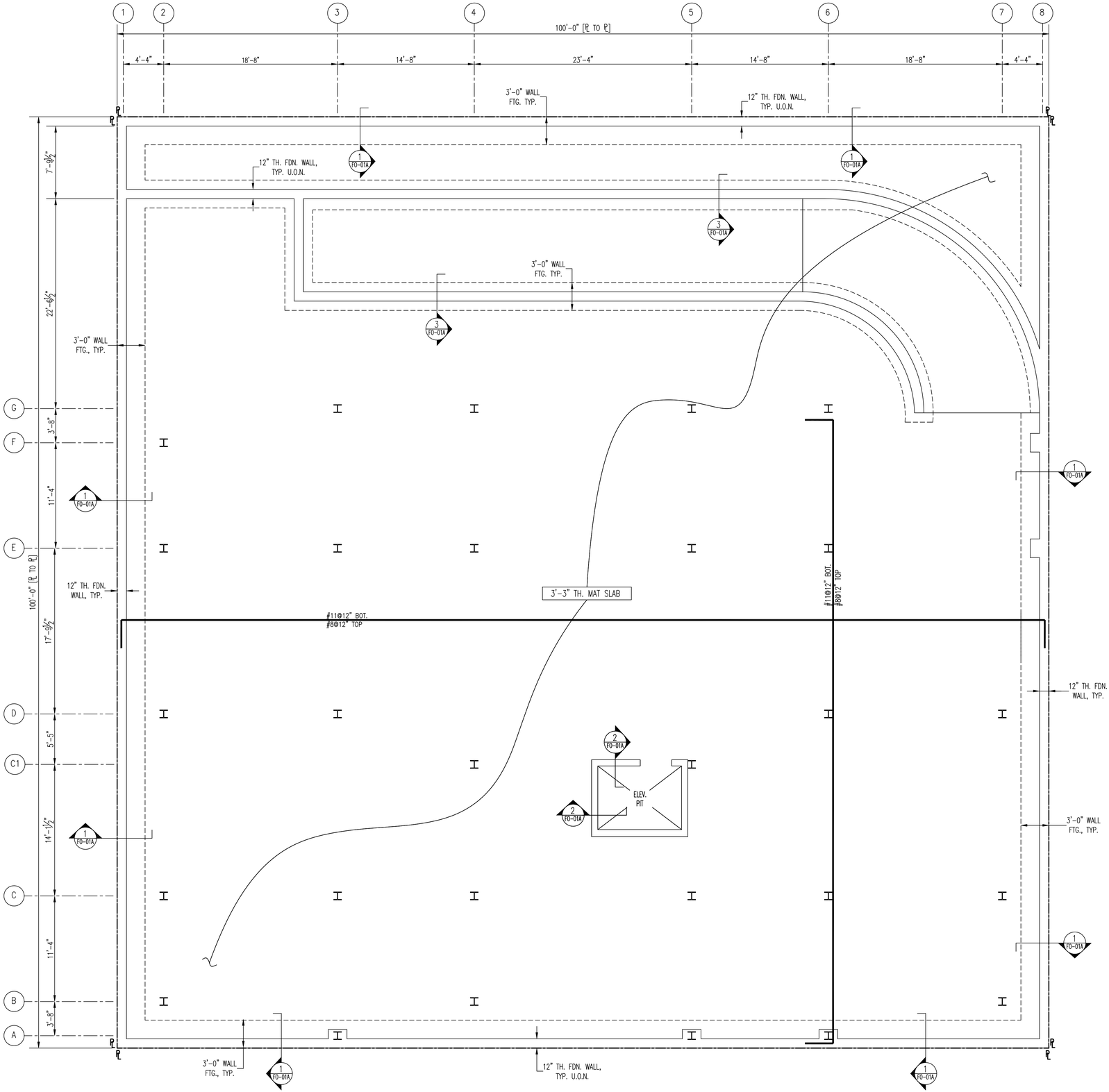

NOTES

1. TOP OF SLAB ELEVATION +1.50', U.O.N.
2. PROVIDE 6" OF CRUSHED STONE WITH 20MIL VAPOR BARRIER UNDER SLAB ON GRADE.
3. CONTRACTOR TO PROVIDE 95% COMPACTION TO SUBGRADE PRIOR TO PLACEMENT OF CRUSHED STONE & VAPOR BARRIER.
4. FOR BALANCE OF NOTES AND LEGEND, SEE DWG. S-000.00.
5. (#'-#") INDICATES BOTTOM OF FOOTING ELEVATION.

CONTRACTOR'S SPECIAL NOTES:

1. CONTRACTOR TO PROVIDE AND DESIGN A DEWATERING SYSTEM IN ACCORDANCE WITH NYC AND STATE LAWS.
2. WATERPROOFING SYSTEM SHALL BE BY GRACE CONSTRUCTION PRODUCTS PREPRUFE 300R & 160R.
3. CONTRACTOR TO PROVIDE ENGINEER OF RECORD WITH A WRITTEN GUARANTEE FROM GRACE THAT WATERPROOFING HAS BEEN INSTALLED IN ACCORDANCE WITH MANUFACTURER'S RECOMMENDATIONS.
4. CONTRACTOR TO PROVIDE PILE SHEETING NECESSARY FOR EXCAVATION IN CONSTRUCTION OF FOUNDATION WALLS.
5. ALL MAT FOUNDATION BOTTOM REBAR TO BE EPOXY COATED.

1 — FOUNDATION PLAN
SCALE: 3/16"=1'-0"

REVISIONS

NO.	DESCRIPTIONS	DATE
1	DOB	-

NO.	TO WHOM ISSUED	DATE

ISSUES

Tahoe Development Group LLC — Owner
8217 153rd Avenue — Anthony Gurino
Howard Beach, NY 11414 — 718 835 4700

Michael Muroff Architect, LLC — Architect
333 Hudson Street, Suite 501 — Michael Muroff
New York, NY 10013 — 646 230 7111

Structural Engineering Systems, PLLC — Structural Engineer
214-41 42nd Avenue, Suite 2B — Joseph Gulino
Bayside, NY 11361 — 718 224 7161

S. Schwartz Engineering, PLLC — MEP Engineer
15 West 39th Street, Suite PH — Simon Schwartz
New York, NY 10018 — 212 695 3509

THIS DRAWING IS AN INSTRUMENT OF SERVICE AND SHALL REMAIN THE PROPERTY OF MICHAEL MUROFF ARCHITECT,L.L.C., WHETHER THE PROJECT FOR WHICH IT IS MADE IS EXECUTED OR NOT. THE DRAWING SHALL NOT BE USED BY THE OWNER OR OTHERS ON OTHER PROJECTS, FOR ADDITIONS TO THIS PROJECT, OR FOR COMPLETING THIS PROJECT BY OTHERS, EXCEPT BY AGREEMENT IN WRITING AND WITH APPROPRIATE COMPENSATION TO MUROFF ARCHITECT,L.L.C.. SUBMISSION OR DISTRIBUTION TO MEET OFFICIAL REGULATORY REQUIREMENTS OR FOR OTHER PURPOSES IN CONNECTION WITH THE PROJECT IS NOT TO BE CONSTRUED AS PUBLICATION IN DEROGATION OF THE RIGHTS OF MICHAEL MUROFF ARCHITECT,L.L.C. REPRODUCTION OR PUBLICATION BY ANY METHOD IN WHOLE OR IN PART IS PROHIBITED. TITLE TO THIS DRAWING RELIGNS TO MICHAEL MUROFF ARCHITECT,L.L.C. WITHOUT PREJUDICE.

THE FIRM OF MICHAEL MUROFF ARCHITECT,L.L.C. HAS NOT BEEN RETAINED TO DO FIELD SUPERVISION OR INSPECTION. THE FIRM OF MICHAEL MUROFF ARCHITECT,L.L.C. IT'S PRINCIPLES, EMPLOYEES, AND CONSULTANTS HAVE NOT BEEN RETAINED TO PROVIDE ANY SERVICES RELATED TO ASBESTOS IN ANY FORM. THE FIRM OF MICHAEL MUROFF ARCHITECT,L.L.C. IT'S PRINCIPLES, EMPLOYEES, AND CONSULTANTS DO NOT ASSUME ANY RESPONSIBILITY AND ALSO DO NOT SPECIFY OR MAKE RECOMMENDATIONS RELATED TO ASBESTOS IN ANY FORM. ASBESTOS EXPOSURE ASSESSMENTS, OFFICIAL ASBESTOS HEALTH HAZARDS OR EXPOSURE; CORRECTIVE ACTION PROGRAMS, OR ASBESTOS CONTAINMENT OR REMOVAL PROGRAMS. THE OWNER OF THIS BUILDING HAS RETAINED AN INDEPENDENT ASBESTOS CONSULTANT. ALL INQUIRIES SHOULD BE DIRECTED TO THE OWNER OR HIS ASBESTOS CONSULTANT. IT IS A VIOLATION OF THE PROFESSIONAL LICENSE LAW FOR ANY PERSON TO ALTER THIS DRAWING IN ANY WAY. ALTERATIONS TO THIS DRAWING ARE ONLY VALID WHEN ACCOMPANIED BY A DRAWING STAMPED WITH THE WORDS "ALTERED BY" FOLLOWED BY HIS SIGNATURE AND DATE OF ALTERATION AND A SPECIFIC DESCRIPTION OF THE ALTERATION.

Michael Muroff Architect, LLC
333 Hudson Street
Suite 501
New York, NY 10013
Tel: 646. 230. 7111
Fax: 646. 230. 7272
NY Licence #015011

221-227 EAST 138th STREET

NYC DOB BIN: 2000973, 2000974
Block: 2340 Lots: 56, 58

FOUNDATION PLAN

STATE OF NEW YORK — JOSEPH ANTHONY GULINO — 070916 — LICENSED PROFESSIONAL ENGINEER

Date: 1-14-15
Scale: As Noted
Project No. : 14-165
Drawing By: EGK
Checked By: JAG

FO-001.00

SHEET # 2 OF 27

©

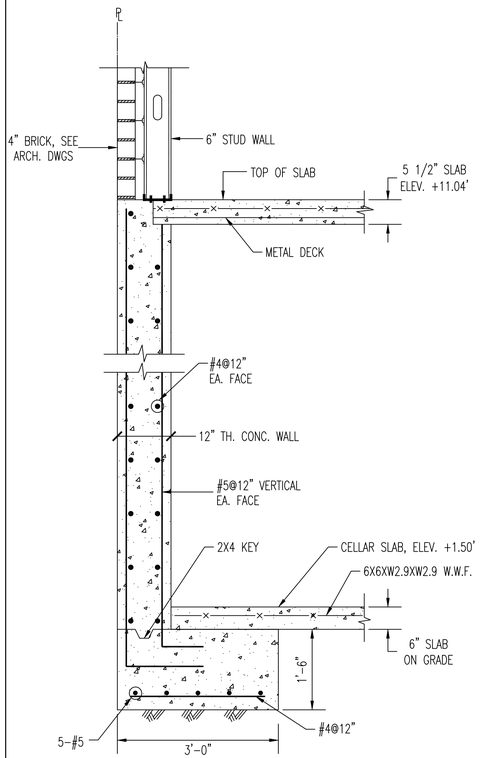

1 FO-001 S-001 SECTION
SCALE: N.T.S.

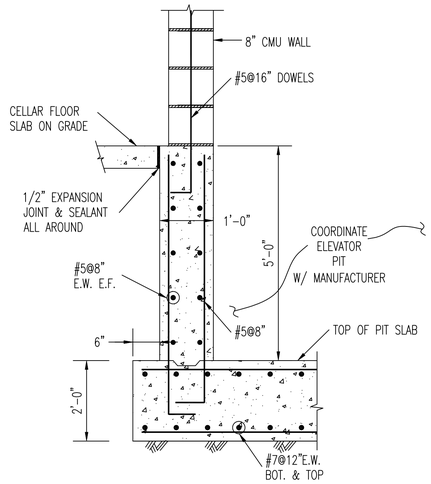

2 FO-01A SECTION
SCALE: N.T.S.

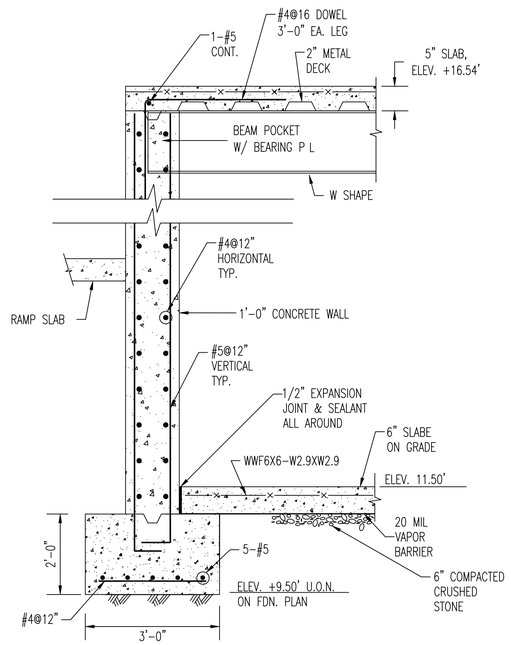

3 FO-001 S-001 SECTION
SCALE: N.T.S.

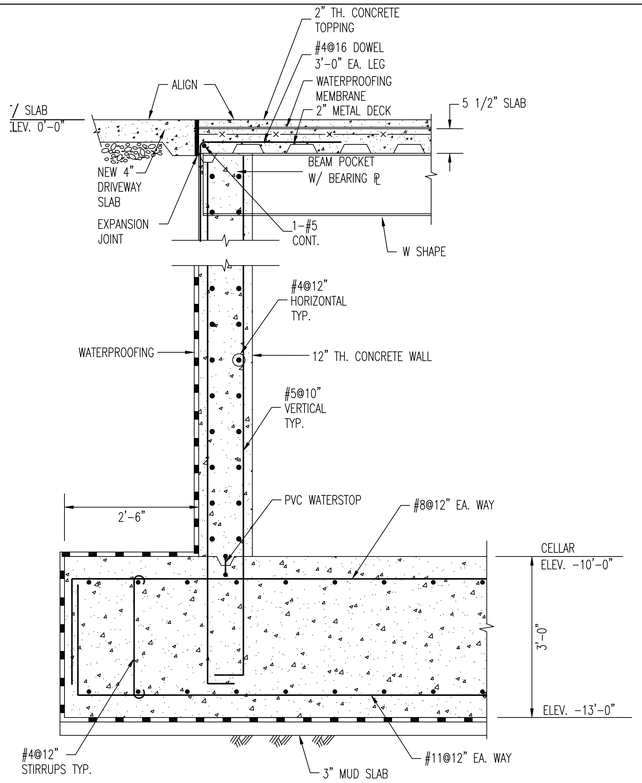

2 FO-01A SECTION
SCALE: N.T.S.

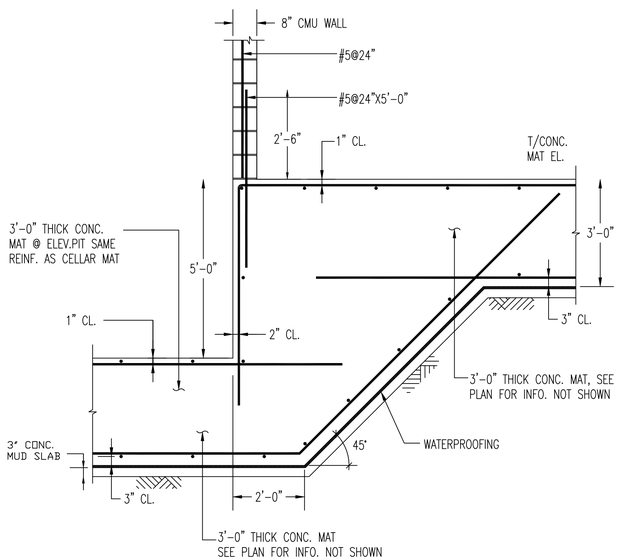

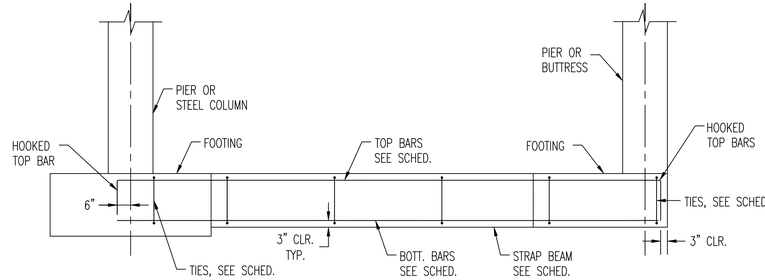

TYPICAL STRAP BEAM ELEVATION
SCALE: N.T.S.

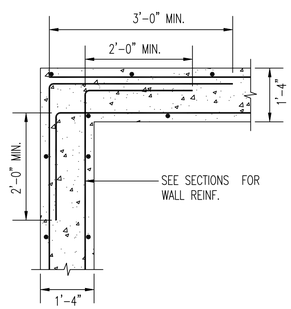

TYPICAL WALL CORNER
SCALE: N.T.S.

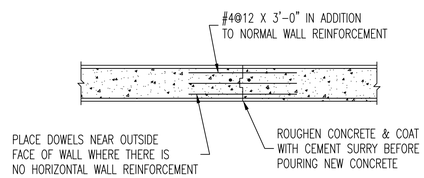

TYPICAL VERTICAL CONSTRUCTION JOINT IN WALL

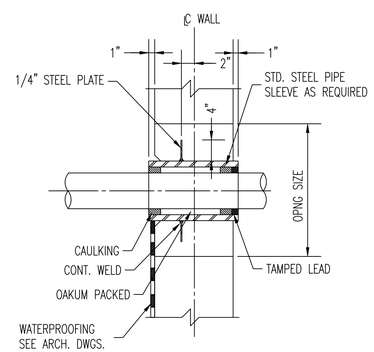

PIPE SLEEVE DETAIL

REVISIONS		
NO.	DESCRIPTIONS	DATE
1	DOB	-
NO.	TO WHOM ISSUED	DATE
	ISSUES	

Tahoe Development Group LLC
8217 153rd Avenue
Howard Beach, NY 11414
Owner
Anthony Gurino
718 835 4700

Michael Muroff Architect, LLC
333 Hudson Street, Suite 501
New York, NY 10013
Architect
Michael Muroff
646 230 7111

Structural Engineering Systems, PLLC
214-41 42nd Avenue, Suite 2B
Bayside, NY 11361
Structural Engineer
Joseph Gulino
718 224 7161

S. Schwartz Engineering, PLLC
15 West 39th Street, Suite PH
New York, NY 10018
MEP Engineer
Simon Schwartz
212 695 3509

THIS DRAWING IS AN INSTRUMENT OF SERVICE AND SHALL REMAIN THE PROPERTY OF MICHAEL MUROFF ARCHITECT,L.L.C., WHETHER THE PROJECT FOR WHICH IT IS MADE IS EXECUTED OR NOT. THIS DRAWING SHALL NOT BE USED BY THE OWNER OR OTHERS ON OTHER PROJECTS FOR ADDITIONS TO THIS PROJECT OR FOR COMPLETION OF THIS PROJECT BY OTHERS EXCEPT BY AGREEMENT IN WRITING WITH MICHAEL MUROFF ARCHITECT,L.L.C. THE ARCHITECT SHALL NOT BE RESPONSIBLE FOR ANY ALTERATIONS MADE TO THIS DRAWING. ANY REPRODUCTION IN CONNECTION WITH THE PROJECT DO NOT TO BE CONSTRUED AS PUBLICATION IN DERIGATION OF THE RIGHTS OF MICHAEL MUROFF ARCHITECT,L.L.C. REPRODUCTION OR PUBLICATION BY ANY METHOD IN WHOLE OR IN PART IS PROHIBITED. TITLE TO THIS DRAWING BELONGS TO MICHAEL MUROFF ARCHITECT,L.L.C. WITHOUT PREJUDICE.

THE FIRM OF MICHAEL MUROFF ARCHITECT,L.L.C. HAS NOT BEEN RETAINED TO DO FIELD SUPERVISION OR INSPECTION. THE FIRM OF MICHAEL MUROFF ARCHITECT,L.L.C., ITS PRINCIPLES, EMPLOYEES, AND CONSULTANTS HAVE NOT BEEN RETAINED TO PROVIDE ANY SERVICES RELATED TO ASBESTOS, TOXIC WASTE, OR HAZARDOUS MATERIALS. THEIR REMOVAL, AMENDMENTS, OR ENCAPSULATING. MICHAEL MUROFF ARCHITECT,L.L.C. ASSUMES NO RESPONSIBILITY FOR ANY ASBESTOS, TOXIC WASTE, OR HAZARDOUS MATERIALS ON THE PREMISES. MICHAEL MUROFF ARCHITECT,L.L.C. ASSUMES NO LIABILITY FOR HEALTH HAZARDS OR EXPOSURE, CORRECTIVE ACTION, PUNITIVE, OR ASBESTOS LIABILITIES OF WORKING PERSONNEL OR THE OWNER OF THIS BUILDING HAS RETAINED AN INDEPENDENT ASBESTOS CONSULTANT. ALL INQUIRES SHOULD BE DIRECTED TO THE OWNER OR HIS ASBESTOS CONSULTANT. IT IS A VIOLATION OF THE PROFESSIONAL LICENSE LAW FOR ANY PERSON TO ALTER THIS DRAWING IN ANY WAY UNLESS ACTING UNDER THE DIRECTION OF A REGISTERED ARCHITECT. THE ALTERING ARCHITECT SHALL AFFIX HIS SEAL AND THE NOTATION "ALTERED BY" FOLLOWED BY HIS SIGNATURE AND DATE OF ALTERATION AND A SPECIFIC DESCRIPTION OF THE ALTERATION.

Michael Muroff Architect, LLC
333 Hudson Street
Suite 501
New York, NY 10013
Tel: 646. 230. 7111
Fax: 646. 230. 7277
NY Licence #015011

221-227
EAST 138th STREET

NYC DOB BIN: 2000973, 2000974
Block: 2340 Lots: 56, 58

FOUNDATION SECTIONS AND DETAILS I

STATE OF NEW YORK · JOSEPH ANTHONY GULINO · 070916 · LICENSED PROFESSIONAL ENGINEER

Date: 1-14-15
Scale: As Noted
Project No.: 14-165
Drawing By: EGK
Checked By: JAG

FO-01A.00

SHEET # 3 OF 27

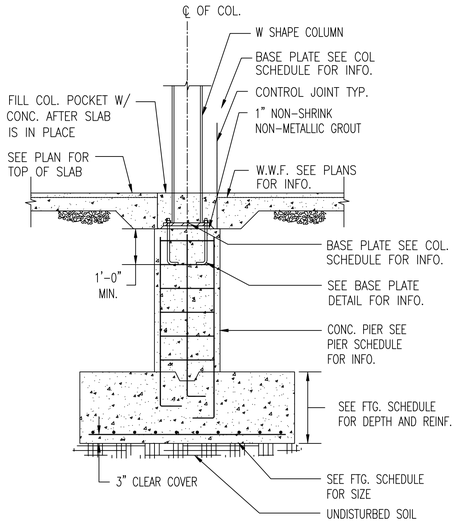

COLUMN FOOTING WITH PIER

SCALE: N.T.S.

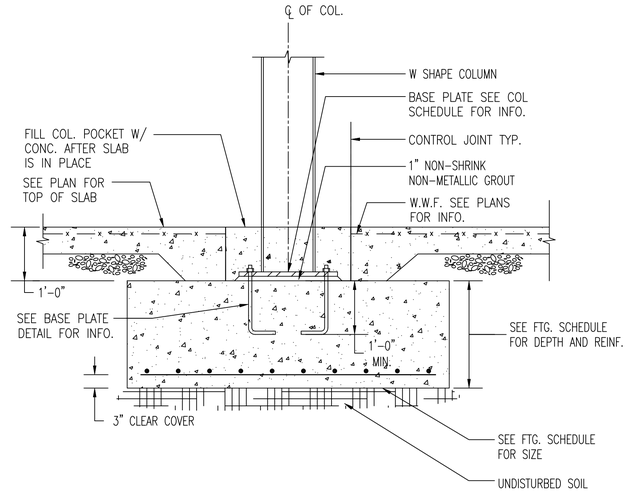

COLUMN FOOTING AT SLAB

SCALE: N.T.S.

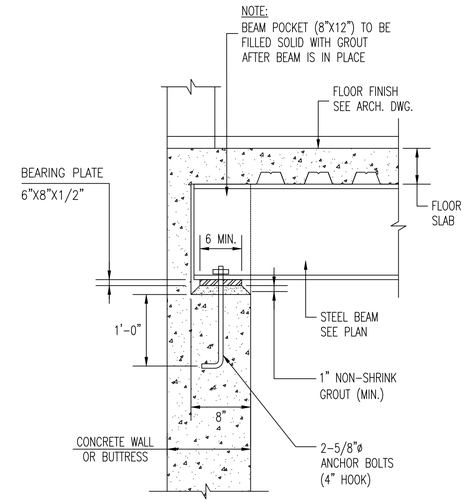

TYPICAL DETAIL FOR BEAM BEARING ON CONCRETE WALL OR BUTTRESS

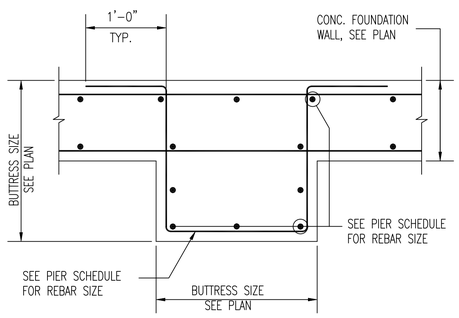

TYPICAL PLAN DETAIL OF BUTTRESS

SCALE: N.T.S.

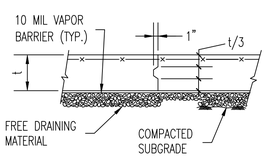

SEE NOTE 3 ON S-1

CONSTRUCTION JOINT DETAIL FOR SLAB ON GRADE

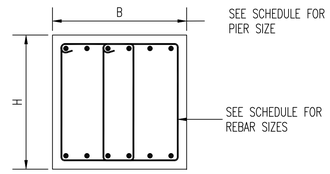

STRAP BEAM

SCALE: N.T.S.

FOOTING SCHEDULE (3.0 TON SOIL)				
MARK	DIMENSIONS	REINFORCEMENT		REMARKS
	B x L x D	TOP	BOTTOM	
F8	9'-0"x9'-0"x2'-0"	–	12-#7	EA. WAY
F9	9'-0"x9'-0"x2'-0"	–	14-#6	EA. WAY
F10	10'-0"x10'-0"x2'-6"	–	12-#7	EA. WAY
F11	11'-0"x11'-0"x3'-0"	–	12-#8	EA. WAY
F12	12'-0"x12'-0"x3'-0"	–	13-#8	EA. WAY

BUTTRESS/PIER SCHEDULE				
MARK	SIZE B X B	VERT. REINF.	HORIZ. TIES SIZE & SPAC.	REMARKS
P1	24"x24"	8-#8	#4@12"	SEE TYP. DETAIL
P2	20"x20"	8-#7	#4@12"	SEE TYP. DETAIL

STRAP BEAM SCHEDULE							
MARK	WIDTH B	DEPTH H	BOTT. REINF.	TOP REINF.	TIES SIZE	TIES SPACING	REMARKS
S1	24"	18"	6-#6	6-#7	#4	10"	SEE TYP. DETAIL

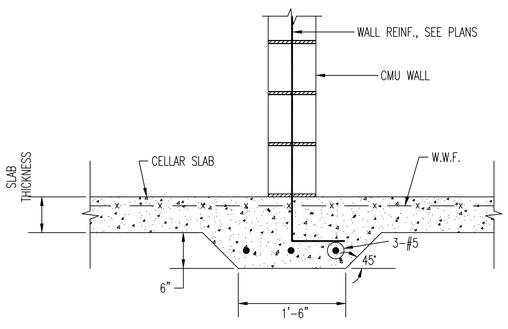

THICKENED SLAB DETAIL

SCALE: N.T.S.

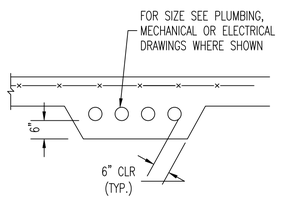

PIPE ENCASEMENT DETAIL FOR SLAB ON GRADE

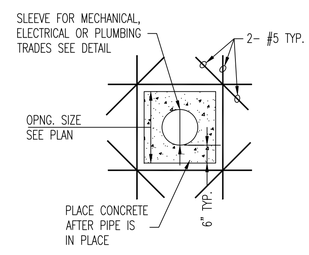

BOX OPENING AT FOUNDATION WALL

SCALE: N.T.S.

REVISIONS		
NO.	DESCRIPTIONS	DATE
1	DOB	–
NO.	TO WHOM ISSUED	DATE
	ISSUES	

Tahoe Development Group LLC
8217 153rd Avenue
Howard Beach, NY 11414
Owner
Anthony Gurino
718 835 4700

Michael Muroff Architect, LLC
333 Hudson Street, Suite 501
New York, NY 10013
Architect
Michael Muroff
646 230 7111

Structural Engineering Systems, PLLC
214-41 42nd Avenue, Suite 2B
Bayside, NY 11361
Structural Engineer
Joseph Gulino
718 224 7161

S. Schwartz Engineering, PLLC
15 West 39th Street, Suite PH
New York, NY 10018
MEP Engineer
Simon Schwartz
212 695 3509

THIS DRAWING IS AN INSTRUMENT OF SERVICE AND SHALL REMAIN THE PROPERTY OF MICHAEL MUROFF ARCHITECT,L.L.C., WHETHER THE PROJECT FOR WHICH IT IS MADE IS EXECUTED OR NOT. THIS DRAWING SHALL NOT BE USED BY THE OWNER OR OTHERS ON OTHER PROJECTS FOR ADDITIONS TO THIS PROJECT OR FOR COMPLETION OF THIS PROJECT BY OTHERS EXCEPT BY AGREEMENT IN WRITING WITH MICHAEL MUROFF ARCHITECT,L.L.C. SUBMISSION OR DISTRIBUTION TO MEET OFFICIAL REGULATORY REQUIREMENTS OR FOR OTHER PURPOSES IN CONNECTION WITH THE PROJECT IS NOT TO BE CONSTRUED AS PUBLICATION IN DERROGATION OF THE RIGHTS OF MICHAEL MUROFF ARCHITECT,L.L.C. REPRODUCTION OF THIS DRAWING IN WHOLE OR IN PART OR PROGRAMMED, TITLE TO THIS DRAWING BELONGS TO MICHAEL MUROFF ARCHITECT,L.L.C. WITHOUT PREJUDICE.

THE FIRM OF MICHAEL MUROFF ARCHITECT,L.L.C., HAS NOT BEEN RETAINED TO DO FIELD SUPERVISION OR INSPECTION. THE FIRM OF MICHAEL MUROFF ARCHITECT,L.L.C., ITS PRINCIPALS, EMPLOYEES, AND CONSULTANTS HAVE NOT BEEN RETAINED TO PROVIDE ANY SERVICES RELATED TO ASBESTOS, TOXIC WASTE, OR HAZARDOUS MATERIALS, THEIR REMOVAL, AMENDMENTS, OR ENCAPSULATING. MICHAEL MUROFF ARCHITECT,L.L.C. ET AL., DO NOT SPECIFY OR MAKE RECOMMENDATIONS RELATED TO ASBESTOS IN ANY FORM. ASBESTOS EXPOSURE ASSESSMENTS, APPRAISALS, ASBESTOS HEALTH HAZARDS OR EXPOSURE, CORRECTIVE ACTION PROGRAMS, OR ASBESTOS CONTAINMENT OR REMOVAL PROGRAMS, THE OWNER SHOULD HIRE A QUALIFIED ASBESTOS CONSULTANT. THE ARCHITECT SHALL NOT BE LIABLE FOR ANY ACTS OR OMISSIONS OF ANY ASBESTOS CONSULTANT. IT IS A VIOLATION OF THE PROFESSIONAL LICENSE LAW FOR ANY PERSON TO ALTER THIS DRAWING IN ANY WAY UNLESS ACTING UNDER THE DIRECTION OF A REGISTERED ARCHITECT. THE ALTERING ARCHITECT SHALL AFFIX HIS SEAL AND THE NOTATION "ALTERED BY" FOLLOWED BY HIS SIGNATURE AND DATE OF ALTERATION AND A SPECIFIC DESCRIPTION OF THE ALTERATION.

Michael Muroff Architect, LLC
333 Hudson Street
Suite 501
New York, NY 10013
Tel: 646. 230. 7111
Fax: 646. 230. 7277
NY Licence #015011

221-227
EAST 138th STREET

NYC DOB BIN: 2000973, 2000974
Block: 2340 Lots: 56, 58

FOUNDATION SECTIONS AND DETAILS II

STATE OF NEW YORK · JOSEPH ANTHONY GULINO · 070916 · LICENSED PROFESSIONAL ENGINEER

Date: 1-14-15
Scale: As Noted
Project No.: 14-165
Drawing By: EGK
Checked By: JAG

FO-01B.00

SHEET # 4 OF 27

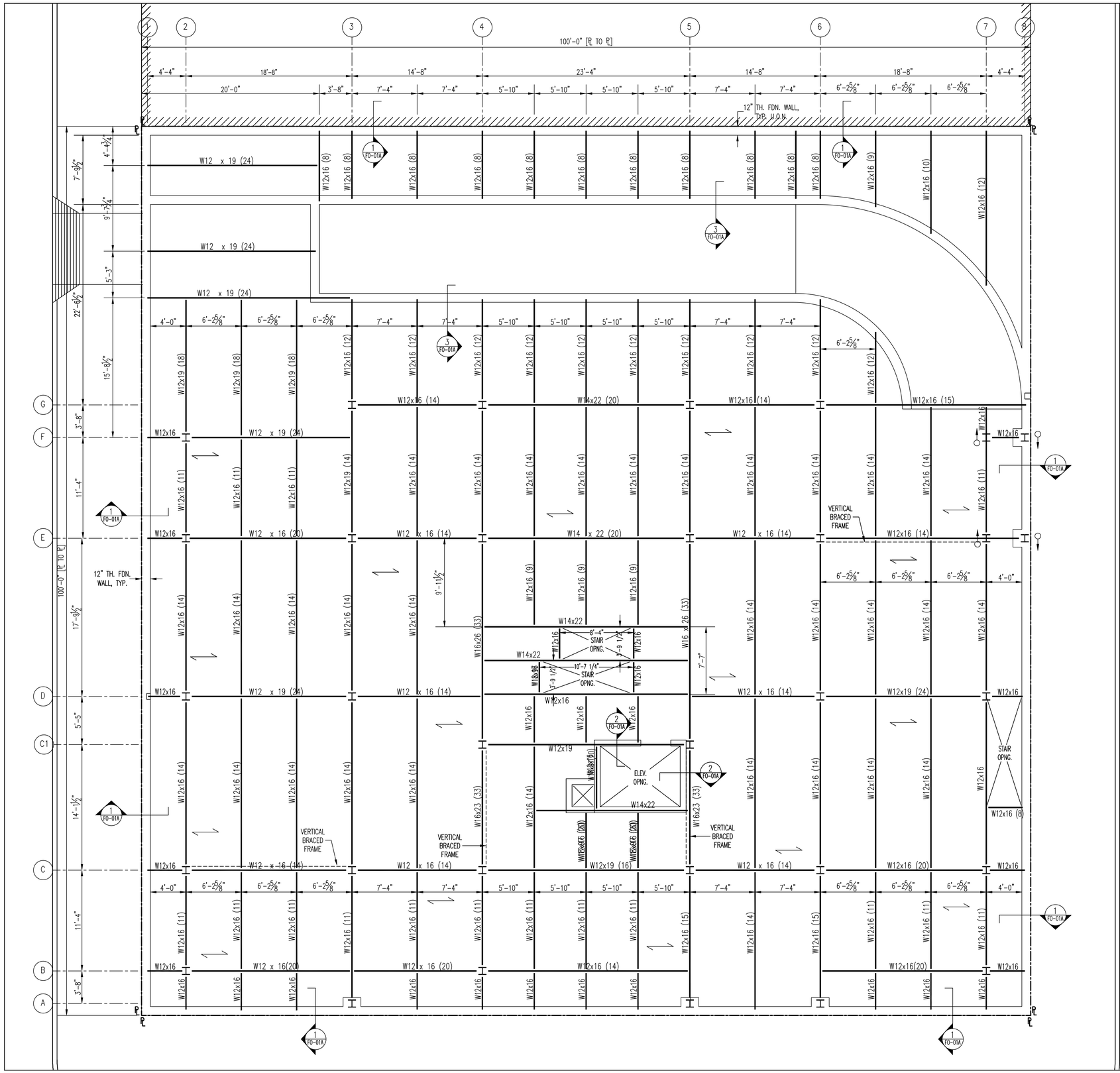

NOTES

1. FIRST FLOOR TOP OF SLAB ELEV. +11.50'.
2. FIRST FLOOR TOP OF STEEL ELEV. +11.04'.
3. SLAB SHALL BE 4,000 PSI 3 1/2" LIGHT WEIGHT CONCRETE ON 2" DEEP 20 GAGE GALVANIZED METAL DECK AS MANUFACTURED BY UNITED STEEL DECK WITH 6X6XW2.9XW2.9 WELDED WIRE FABRIC.
4. ALL SHOP DRAWINGS FOR STRUCTURAL STEEL, METAL DECK, LIGHT GAUGE METAL FRAMING, CONCRETE MIX DESIGN, CONCRETE MASONRY UNITS, AND REBAR SHALL BE SUBMITTED TO THE ENGINEER FOR REVIEW AND APPROVAL PRIOR TO FABRICATION AND ERECTION.
5. INDICATES METAL DECK/SLAB SPAN DIRECTION.
6. FOR BALANCE OF NOTES AND LEGEND, SEE DWG. S-000.

1 FIRST FLOOR FRAMING PLAN
SCALE: 3/16"=1'-0"

REVISIONS

NO.	DESCRIPTIONS	DATE

NO.	TO WHOM ISSUED	DATE
1	DOB	-

ISSUES

Tahoe Development Group LLC
8217 153rd Avenue
Howard Beach, NY 11414
Owner
Anthony Gurino
718 835 4700

Michael Muroff Architect, LLC
333 Hudson Street, Suite 501
New York, NY 10013
Architect
Michael Muroff
646 230 7111

Structural Engineering Systems, PLLC
214-41 42nd Avenue, Suite 2B
Bayside, NY 11361
Structural Engineer
Joseph Gulino
718 224 7161

S. Schwartz Engineering, PLLC
15 West 39th Street, Suite PH
New York, NY 10018
MEP Engineer
Simon Schwartz
212 695 3509

THIS DRAWING IS AN INSTRUMENT OF SERVICE AND SHALL REMAIN THE PROPERTY OF MICHAEL MUROFF ARCHITECT,LLC. WHETHER THE PROJECT FOR WHICH IT IS MADE IS EXECUTED OR NOT. THIS DRAWING SHALL NOT BE USED BY THE OWNER OR OTHERS FOR OTHER PROJECTS, FOR ADDITIONS TO THIS PROJECT OR FOR COMPLETION OF THIS PROJECT BY OTHERS EXCEPT BY AGREEMENT IN WRITING WITH MICHAEL MUROFF ARCHITECT,LLC. SUBMISSION OR DISTRIBUTION TO MEET OFFICIAL REGULATORY REQUIREMENTS OR FOR OTHER PURPOSES IN CONNECTION WITH THIS PROJECT IS NOT TO BE CONSTRUED AS PUBLICATION IN DEROGATION OF THE RIGHTS OF MICHAEL MUROFF ARCHITECT,LLC. REPRODUCTION OR PUBLICATION BY ANY METHOD IN WHOLE OR IN PART IS PROHIBITED. TITLE TO THIS DRAWING BELONGS TO MICHAEL MUROFF ARCHITECT,LLC. WITHOUT PREJUDICE.

THE FIRM OF MICHAEL MUROFF ARCHITECT,LLC. HAS NOT BEEN RETAINED TO DO FIELD SUPERVISION OR INSPECTION. THE FIRM OF MICHAEL MUROFF ARCHITECT,LLC. HAS NOT BEEN RETAINED TO DO ASBESTOS SURVEYS OR ANY OTHER ASBESTOS RELATED SERVICES. THE PROFESSIONAL SERVICES OF MICHAEL MUROFF ARCHITECT,LLC. DO NOT INCLUDE ASBESTOS, TOXIC WASTE, OR HAZARDOUS MATERIALS, THEIR REMOVAL, ABATEMENT, OR ENCAPSULATING. MICHAEL MUROFF ARCHITECT,LLC. DOES NOT SPECIFY OR MAKE RECOMMENDATIONS RELATED TO ASBESTOS IN ANY FORM. ASBESTOS EXPOSURE ASSESSMENTS, APPRAISALS, OR ABATEMENT PLANS SHOULD BE EMPLOYED. CORRECTIVE ACTION PROGRAMS, IN ACCORDANCE WITH FEDERAL, PROVINCIAL, OR STATE REGULATIONS, MUST BE IMPLEMENTED IMMEDIATELY IF ASBESTOS IS DISCOVERED. ASBESTOS MATERIALS MUST BE REMOVED BY A LICENSED ASBESTOS ABATEMENT CONTRACTOR. IT IS A VIOLATION OF THE PROFESSIONAL LICENSE LAW FOR ANY PERSON TO ALTER THIS DRAWING IN ANY WAY UNLESS ACTING UNDER THE DIRECTION OF A REGISTERED ARCHITECT. THE ALTERING ARCHITECT MUST AFFIX HIS SEAL AND THE NOTATION "ALTERED BY" FOLLOWED BY HIS SIGNATURE AND DATE OF ALTERATION AND A SPECIFIC DESCRIPTION OF THE ALTERATION.

Michael Muroff Architect, LLC
333 Hudson Street
Suite 501
New York, NY 10013
Tel: 646. 230. 7111
Fax: 646. 230. 7277
NY Licence #015017

221-227
EAST 138th STREET

NYC DOB BIN: 2000973, 2000974
Block: 2340 Lots: 56, 58

FIRST FLOOR
FRAMING PLAN

STATE OF NEW YORK · JOSEPH ANTHONY GULINO · 070916 · LICENSED PROFESSIONAL ENGINEER

Date: 1-14-15
Scale: As Noted
Project No.: 14-165
Drawing By: EGK
Checked By: JAG

S-001.00

SHEET # 5 OF 27

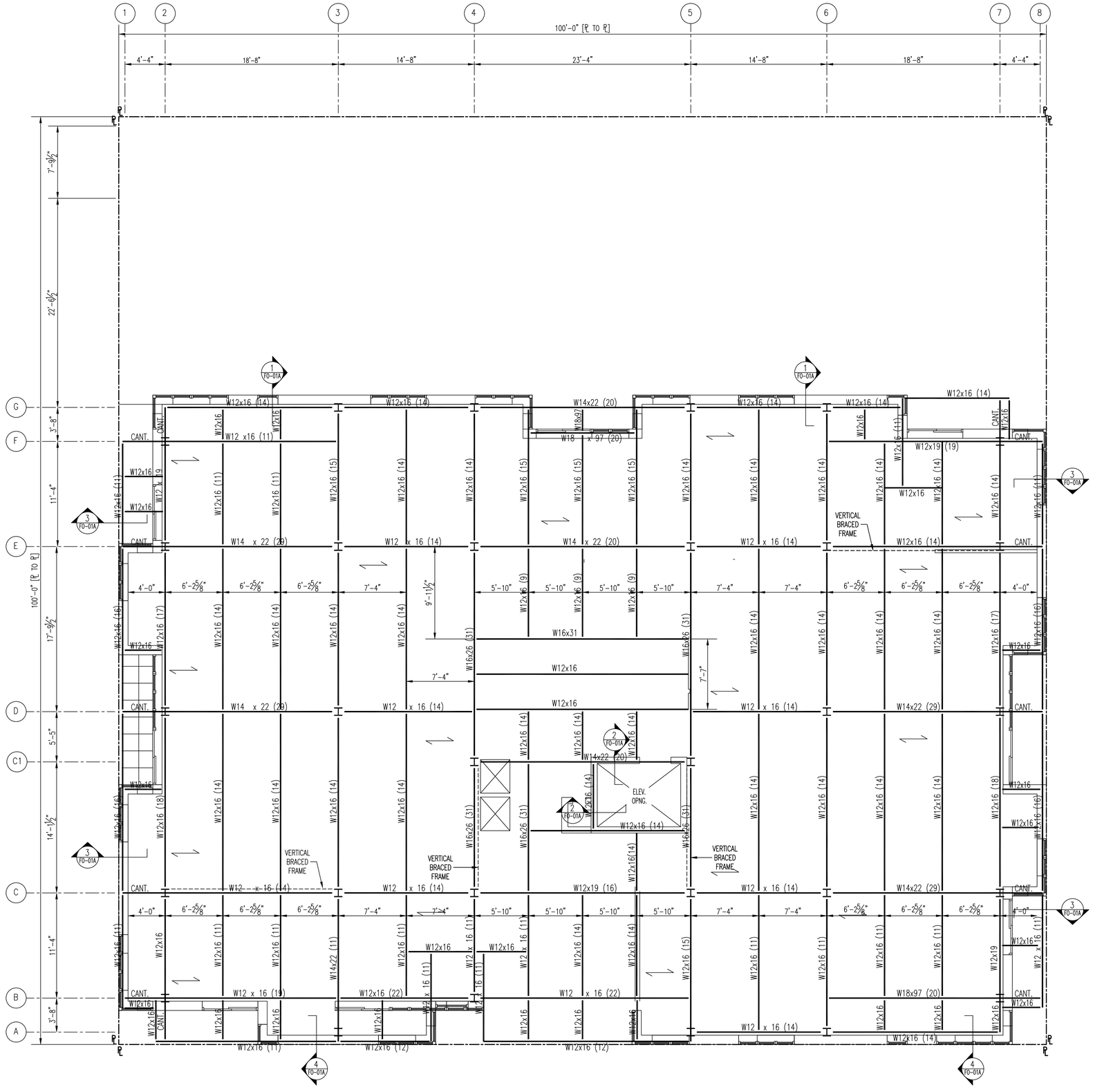

NOTES

1. SECOND FLOOR TOP OF SLAB ELEV. +24.50'.
2. SECOND FLOOR TOP OF STEEL ELEV. +24.04'.
3. SLAB SHALL BE 4,000 PSI 3 1/2" LIGHT WEIGHT CONCRETE ON 2" DEEP 20 GAGE GALVANIZED METAL DECK AS MANUFACTURED BY UNITED STEEL DECK WITH 6X6XW2.9XW2.9 WELDED WIRE FABRIC.
4. ALL SHOP DRAWINGS FOR STRUCTURAL STEEL, METAL DECK, LIGHT GAUGE METAL FRAMING, CONCRETE MIX DESIGN, CONCRETE MASONRY UNITS, AND REBAR SHALL BE SUBMITTED TO THE ENGINEER FOR REVIEW AND APPROVAL PRIOR TO FABRICATION AND ERECTION.
5. INDICATES METAL DECK/SLAB SPAN DIRECTION.
6. FOR BALANCE OF NOTES AND LEGEND, SEE DWG. S-000.

1 SECOND FLOOR FRAMING PLAN
SCALE: 3/16"=1'-0"

REVISIONS

NO.	DESCRIPTIONS	DATE

NO.	TO WHOM ISSUED	DATE
1	DOB	-

ISSUES

Tahoe Development Group LLC
8217 153rd Avenue
Howard Beach, NY 11414
Owner
Anthony Gurino
718 835 4700

Michael Muroff Architect, LLC
333 Hudson Street, Suite 501
New York, NY 10013
Architect
Michael Muroff
646 230 7111

Structural Engineering Systems, PLLC
214-41 42nd Avenue, Suite 2B
Bayside, NY 11361
Structural Engineer
Joseph Gulino
718 224 7161

S. Schwartz Engineering, PLLC
15 West 39th Street, Suite PH
New York, NY 10018
MEP Engineer
Simon Schwartz
212 695 3509

THIS DRAWING IS AN INSTRUMENT OF SERVICE AND SHALL REMAIN THE PROPERTY OF MICHAEL MUROFF ARCHITECT,L.L.C. WHETHER THE PROJECT FOR WHICH IT IS MADE IS EXECUTED OR NOT. THIS DRAWING SHALL NOT BE USED BY THE OWNER OR OTHERS ON OTHER PROJECTS FOR ADDITIONS TO THIS PROJECT OR FOR COMPLETION OF THIS PROJECT BY OTHERS EXCEPT BY AGREEMENT IN WRITING WITH MICHAEL MUROFF ARCHITECT,L.L.C. SUBMISSION OR DISTRIBUTION TO MEET OFFICIAL REGULATORY REQUIREMENTS OR FOR OTHER PURPOSES IN CONNECTION WITH THE PROJECT IS NOT TO BE CONSTRUED AS PUBLICATION IN DEROGATION OF THE RIGHTS OF MICHAEL MUROFF ARCHITECT,L.L.C. MICHAEL MUROFF ARCHITECT,L.L.C. REPRODUCTION OR PUBLICATION BY ANY METHOD IN WHOLE OR IN PART IS PROHIBITED. TITLE TO THIS DRAWING BELONGS TO MICHAEL MUROFF ARCHITECT,L.L.C. WITHOUT PREJUDICE.

THE FIRM OF MICHAEL MUROFF ARCHITECT,L.L.C. HAS NOT BEEN RETAINED TO DO FIELD SUPERVISION OR INSPECTION. THE FIRM OF MICHAEL MUROFF ARCHITECT,L.L.C., IT'S PRINCIPLES, EMPLOYEES, AND CONSULTANTS HAVE NOT BEEN RETAINED TO PROVIDE ANY SERVICES RELATED TO ASBESTOS, TOXIC WASTE, OR HAZARDOUS MATERIALS. THEIR SEARCHES, ASSESSMENTS, OR ENCAPSULATIONS. MICHAEL MUROFF ARCHITECT,L.L.C. DO NOT SPECIFY, OR MAKE RECOMMENDATIONS RELATED TO ASBESTOS IN ANY FORM. ASBESTOS EXPOSURE ASSESSMENTS, APPRAISAL, SAMPLING, TESTING, ABATEMENT, REMOVAL, ENCAPSULATION, OR OTHER ASBESTOS RELATED WORK SHOULD BE DIRECTED TO THE OWNER OF THIS BUILDING AND RETAINED AN INDEPENDENT ASBESTOS CONSULTANT. ALL INQUIRIES SHOULD BE DIRECTED TO THE OWNER OR THE ASBESTOS CONSULTANT. IT IS A VIOLATION OF THE PROFESSIONAL LICENSE LAW FOR ANY PERSON TO ALTER THIS DRAWING IN ANY WAY UNLESS ACTING UNDER THE DIRECTION OF A REGISTERED ARCHITECT. THE ALTERING ARCHITECT SHALL AFFIX HIS SEAL AND THE NOTATION "ALTERED BY" FOLLOWED BY HIS SIGNATURE AND DATE OF ALTERATION AND A SPECIFIC DESCRIPTION OF THE ALTERATION.

Michael Muroff Architect, LLC
333 Hudson Street
Suite 501
New York, NY 10013
Tel: 646. 230. 7111
Fax: 646. 230. 7272
NY Licence #015017

221-227
EAST 138th STREET

NYC DOB BIN: 2000973, 2000974
Block: 2340 Lots: 56, 58

SECOND FLOOR
FRAMING PLAN

STATE OF NEW YORK · JOSEPH ANTHONY GULINO · 070916 · LICENSED PROFESSIONAL ENGINEER

Date: 1-14-15
Scale: As Noted
Project No.: 14-165
Drawing By: EGK
Checked By: JAG

S-002.00

SHEET # 6 OF 27

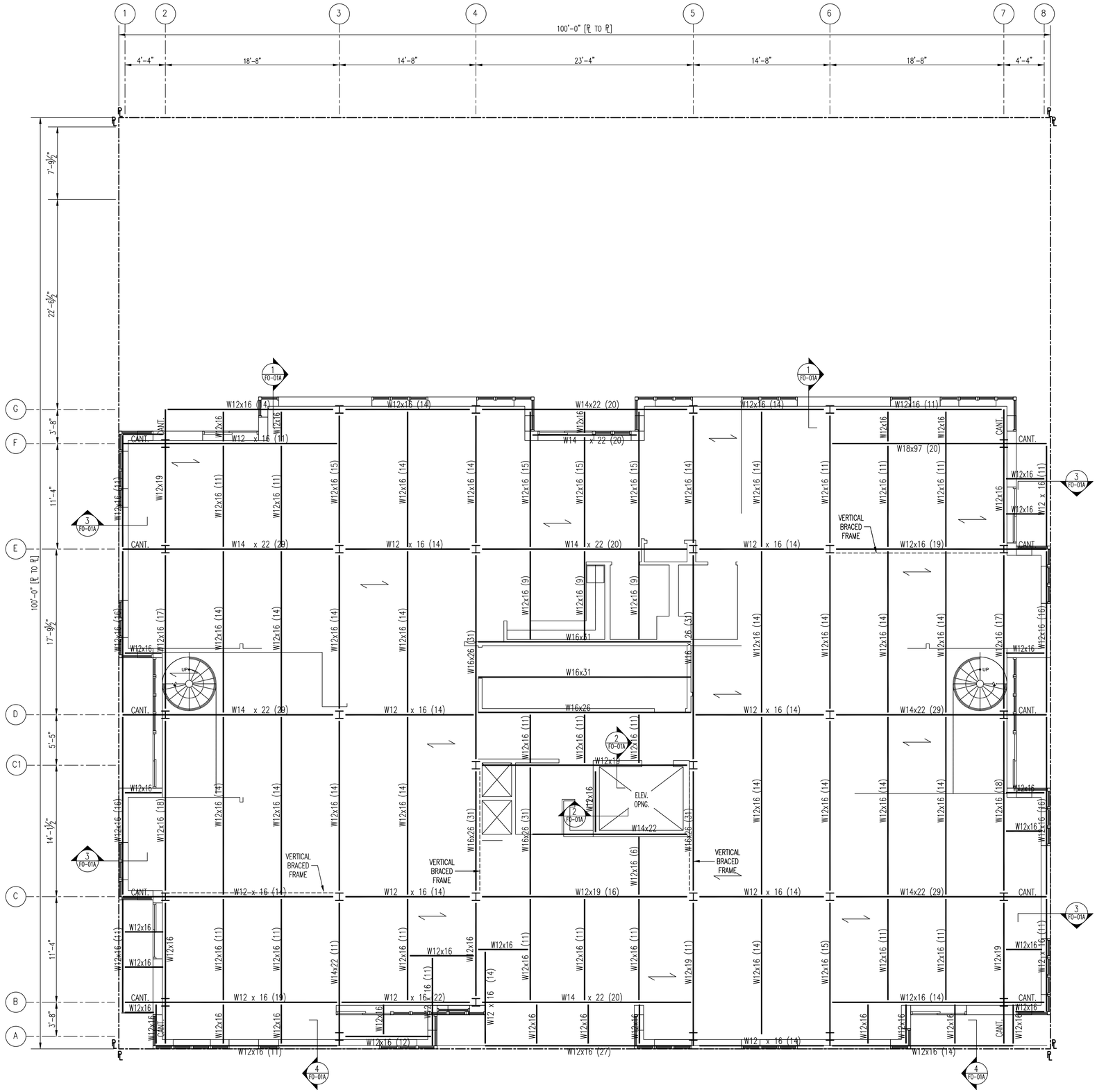

NOTES

1. THIRD FLOOR TOP OF SLAB ELEV. +34.50'.
2. THIRD FLOOR TOP OF STEEL ELEV. +34.04'.
3. SLAB SHALL BE 4,000 PSI 3 1/2" LIGHT WEIGHT CONCRETE ON 2" DEEP 20 GAGE GALVANIZED METAL DECK AS MANUFACTURED BY UNITED STEEL DECK WITH 6X6XW2.9XW2.9 WELDED WIRE FABRIC.
4. ALL SHOP DRAWINGS FOR STRUCTURAL STEEL, METAL DECK, LIGHT GAUGE METAL FRAMING, CONCRETE MIX DESIGN, CONCRETE MASONRY UNITS, AND REBAR SHALL BE SUBMITTED TO THE ENGINEER FOR REVIEW AND APPROVAL PRIOR TO FABRICATION AND ERECTION.
5. INDICATES METAL DECK/SLAB SPAN DIRECTION.
6. FOR BALANCE OF NOTES AND LEGEND, SEE DWG. S-000.

1 THIRD FLOOR FRAMING PLAN
SCALE: 3/16"=1'-0"

REVISIONS

NO.	DESCRIPTIONS	DATE

NO.	TO WHOM ISSUED	DATE
1	DOB	-

ISSUES

Tahoe Development Group LLC
8217 153rd Avenue
Howard Beach, NY 11414
Owner
Anthony Gurino
718 835 4700

Michael Muroff Architect, LLC
333 Hudson Street, Suite 501
New York, NY 10013
Architect
Michael Muroff
646 230 7111

Structural Engineering Systems, PLLC
214-41 42nd Avenue, Suite 2B
Bayside, NY 11361
Structural Engineer
Joseph Gulino
718 224 7161

S. Schwartz Engineering, PLLC
15 West 39th Street, Suite PH
New York, NY 10018
MEP Engineer
Simon Schwartz
212 695 3509

THIS DRAWING IS AN INSTRUMENT OF SERVICE AND SHALL REMAIN THE PROPERTY OF MICHAEL MUROFF ARCHITECT,L.L.C., WHETHER THE PROJECT FOR WHICH IT IS MADE IS EXECUTED OR NOT. THIS DRAWING SHALL NOT BE USED BY THE OWNER OR OTHERS ON OTHER PROJECTS FOR ADDITIONS TO THIS PROJECT OR FOR COMPLETION OF THIS PROJECT BY OTHERS EXCEPT BY AGREEMENT IN WRITING WITH MICHAEL MUROFF ARCHITECT,L.L.C. SUBMISSION OR DISTRIBUTION TO MEET OFFICIAL REGULATORY REQUIREMENTS OR FOR OTHER PURPOSES IN CONNECTION WITH THE PROJECT IS NOT TO BE CONSTRUED AS PUBLICATION IN DERROGATION OF THE RIGHTS OF MICHAEL MUROFF ARCHITECT,L.L.C. OR MICHAEL MUROFF ARCHITECT,L.L.C. RESERVED RIGHTS. NO METHOD IN WHOLE OR IN PART IS PROHIBITED. TITLE TO THIS DRAWING BELONGS TO MICHAEL MUROFF ARCHITECT,L.L.C. WITHOUT PREJUDICE.

THE FIRM OF MICHAEL MUROFF ARCHITECT,L.L.C. HAS NOT BEEN RETAINED TO DO FIELD SUPERVISION OR INSPECTION. THE FIRM OF MICHAEL MUROFF ARCHITECT,L.L.C., ITS PRINCIPLES, EMPLOYEES, AND CONSULTANTS HAVE NOT BEEN RETAINED TO PROVIDE ANY SERVICES RELATED TO ASBESTOS, TOXIC WASTE, OR HAZARDOUS MATERIALS. THEIR REMOVAL, AMENDMENTS, OR ENCAPSULATING. MICHAEL MUROFF ARCHITECT,L.L.C. ETAL, DO NOT SPECIFY OR MAKE RECOMMENDATIONS RELATED TO ASBESTOS IN ANY FORM. ASBESTOS EXPOSURE ASSESSMENTS, APPRAISALS, ASBESTOS HEALTH HAZARDS OR EXPOSURE, CORRECTIVE ACTION PROGRAMS, OR ASBESTOS CONTAINMENT OR REMOVAL PROGRAMS, THE OWNER SHOULD HIRE A QUALIFIED ASBESTOS CONSULTANT. ASBESTOS MATERIALS SHOULD BE REMOVED BY A LICENSED ASBESTOS REMOVAL CONTRACTOR. ASBESTOS CONSULTANT. IT IS A VIOLATION OF THE PROFESSIONAL LICENSE LAW FOR ANY PERSON TO ALTER THIS DRAWING IN ANY WAY UNLESS ACTING UNDER THE DIRECTION OF A REGISTERED ARCHITECT. THE ALTERING ARCHITECT SHALL AFFIX HIS SEAL AND THE NOTATION "ALTERED BY" FOLLOWED BY HIS SIGNATURE AND DATE OF ALTERATION AND A SPECIFIC DESCRIPTION OF THE ALTERATION.

Michael Muroff Architect, LLC
333 Hudson Street
Suite 501
New York, NY 10013
Tel: 646. 230. 7111
Fax: 646. 230. 7277
NY Licence #015011

221-227
EAST 138th STREET

NYC DOB BIN: 2000973, 2000974
Block: 2340 Lots: 56, 58

THIRD FLOOR
FRAMING PLAN

STATE OF NEW YORK · JOSEPH ANTHONY GULINO · 070916 · LICENSED PROFESSIONAL ENGINEER

Date: 1-14-15
Scale: As Noted
Project No.: 14-165
Drawing By: EGK
Checked By: JAG

S-003.00

SHEET # 7 OF 27

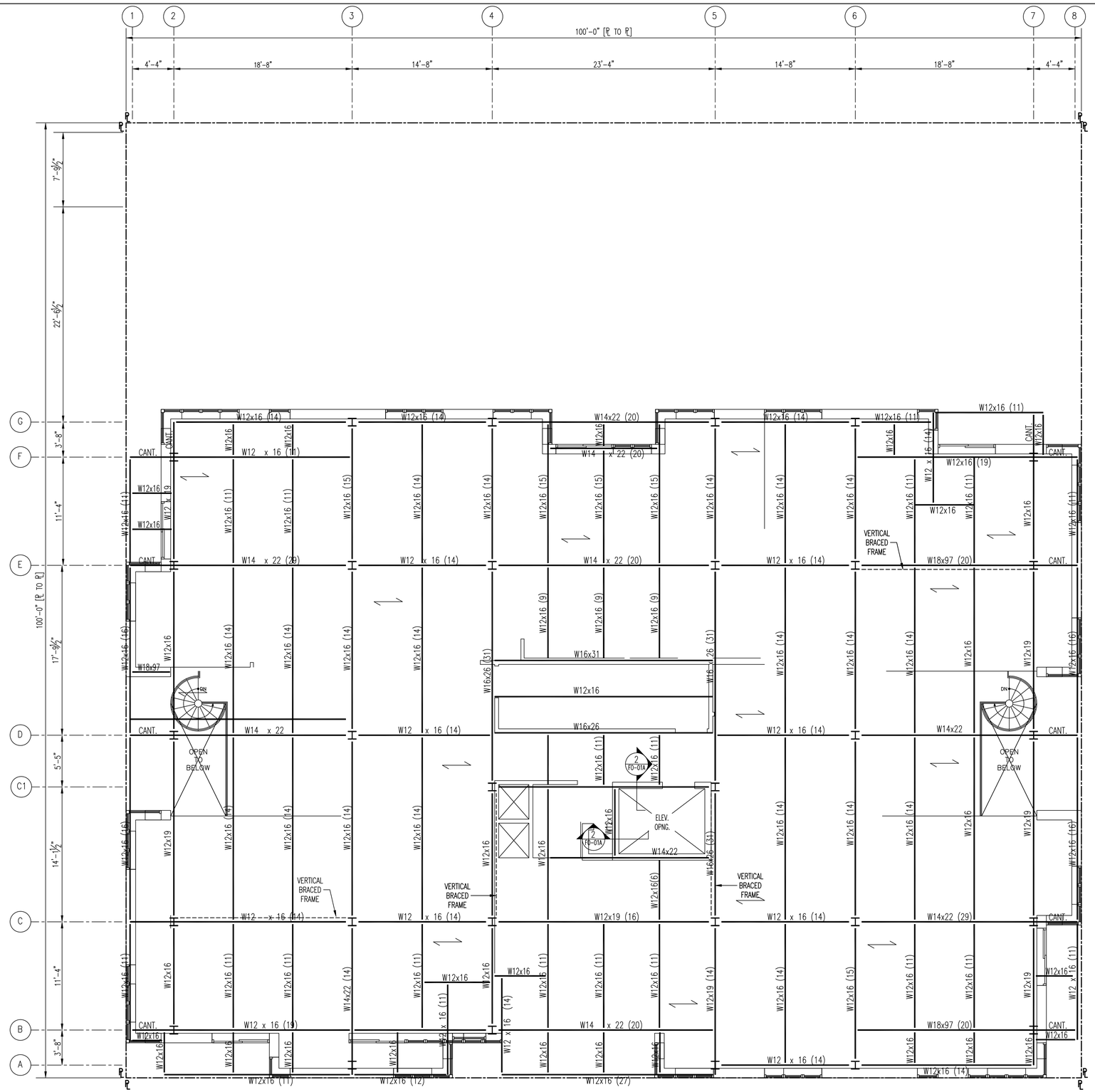

NOTES

1. FOURTH FLOOR TOP OF SLAB ELEV. +44.50'.
2. FOURTH FLOOR TOP OF STEEL ELEV. +44.04'.
3. SLAB SHALL BE 4,000 PSI 3 1/2" LIGHT WEIGHT CONCRETE ON 2" DEEP 20 GAGE GALVANIZED METAL DECK AS MANUFACTURED BY UNITED STEEL DECK WITH 6X6XW2.9XW2.9 WELDED WIRE FABRIC.
4. ALL SHOP DRAWINGS FOR STRUCTURAL STEEL, METAL DECK, LIGHT GAUGE METAL FRAMING, CONCRETE MIX DESIGN, CONCRETE MASONRY UNITS, AND REBAR SHALL BE SUBMITTED TO THE ENGINEER FOR REVIEW AND APPROVAL PRIOR TO FABRICATION AND ERECTION.
5. INDICATES METAL DECK/SLAB SPAN DIRECTION.
6. FOR BALANCE OF NOTES AND LEGEND, SEE DWG. S-000.

1 FOURTH FLOOR FRAMING PLAN
SCALE: 3/16"=1'-0"

REVISIONS

NO.	DESCRIPTIONS	DATE

NO.	TO WHOM ISSUED	DATE
1	DOB	-

ISSUES

Tahoe Development Group LLC
8217 153rd Avenue
Howard Beach, NY 11414
Owner
Anthony Gurino
718 835 4700

Michael Muroff Architect, LLC
333 Hudson Street, Suite 501
New York, NY 10013
Architect
Michael Muroff
646 230 7111

Structural Engineering Systems, PLLC
214-41 42nd Avenue, Suite 2B
Bayside, NY 11361
Structural Engineer
Joseph Gulino
718 224 7161

S. Schwartz Engineering, PLLC
15 West 39th Street, Suite PH
New York, NY 10018
MEP Engineer
Simon Schwartz
212 695 3509

THIS DRAWING IS AN INSTRUMENT OF SERVICE AND SHALL REMAIN THE PROPERTY OF MICHAEL MUROFF ARCHITECT,L.L.C. WHETHER THE PROJECT FOR WHICH IT IS MADE IS EXECUTED OR NOT. THIS DRAWING SHALL NOT BE USED BY THE OWNER OR OTHERS ON OTHER PROJECTS FOR ADDITIONS TO THIS PROJECT OR FOR COMPLETION OF THIS PROJECT BY OTHERS EXCEPT BY AGREEMENT IN WRITING WITH MICHAEL MUROFF ARCHITECT,L.L.C. SUBMISSION OR DISTRIBUTION TO MEET OFFICIAL REGULATORY REQUIREMENTS OR FOR OTHER PURPOSES IN CONNECTION WITH THIS PROJECT IS NOT TO BE CONSTRUED AS PUBLICATION IN VIOLATION OF THE RIGHTS OF REPUTATION OF MICHAEL MUROFF ARCHITECT,L.L.C. REPRODUCTION OR PUBLICATION OF ANY METHOD IN WHOLE OR IN PART IS PROHIBITED. TITLE TO THIS DRAWING BELONGS TO MICHAEL MUROFF ARCHITECT,L.L.C. WITHOUT PREJUDICE.

THE FIRM OF MICHAEL MUROFF ARCHITECT,L.L.C. HAS NOT BEEN RETAINED TO DO FIELD SUPERVISION OR INSPECTION. THE FIRM OF MICHAEL MUROFF ARCHITECT,L.L.C., ITS PRINCIPLES, EMPLOYEES, AND CONSULTANTS HAVE NOT BEEN RETAINED TO PROVIDE ANY SERVICES RELATED TO ASBESTOS, TOXIC WASTE, OR HAZARDOUS MATERIALS. THEIR SEALING, AGREEMENTS, OR ENCAPSULATION. MICHAEL MUROFF ARCHITECT,L.L.C. DO NOT SPECIFY, OR MAKE RECOMMENDATIONS RELATED TO ASBESTOS IN ANY FORM. ASBESTOS EXPOSURE ASSESSMENTS, APPRAISAL, SAMPLING, TESTING, ABATEMENT, REMOVAL, ENCAPSULATION, OR OTHER ASBESTOS RELATED WORK SHOULD BE DIRECTED TO THE OWNER OR AN ASBESTOS CONSULTANT. IT IS A VIOLATION OF THE PROFESSIONAL LICENSE LAW FOR ANY PERSON TO ALTER THIS DRAWING IN ANY WAY UNLESS ACTING UNDER THE DIRECTION OF A REGISTERED ARCHITECT. THE ALTERING ARCHITECT SHALL AFFIX HIS SEAL AND THE NOTATION "ALTERED BY" FOLLOWED BY HIS SIGNATURE AND DATE OF ALTERATION AND A SPECIFIC DESCRIPTION OF THE ALTERATION.

Michael Muroff Architect, LLC
333 Hudson Street
Suite 501
New York, NY 10013
Tel: 646. 230. 7111
Fax: 646. 230. 7272
NY Licence #015017

221-227
EAST 138th STREET

NYC DOB BIN: 2000973, 2000974
Block: 2340 Lots: 56, 58

FOURTH FLOOR FRAMING PLAN

STATE OF NEW YORK · JOSEPH ANTHONY GULINO · 070916 · LICENSED PROFESSIONAL ENGINEER

Date: 1-14-15
Scale: As Noted
Project No.: 14-165
Drawing By: EGK
Checked By: JAG

S-004.00

SHEET # 8 OF 27

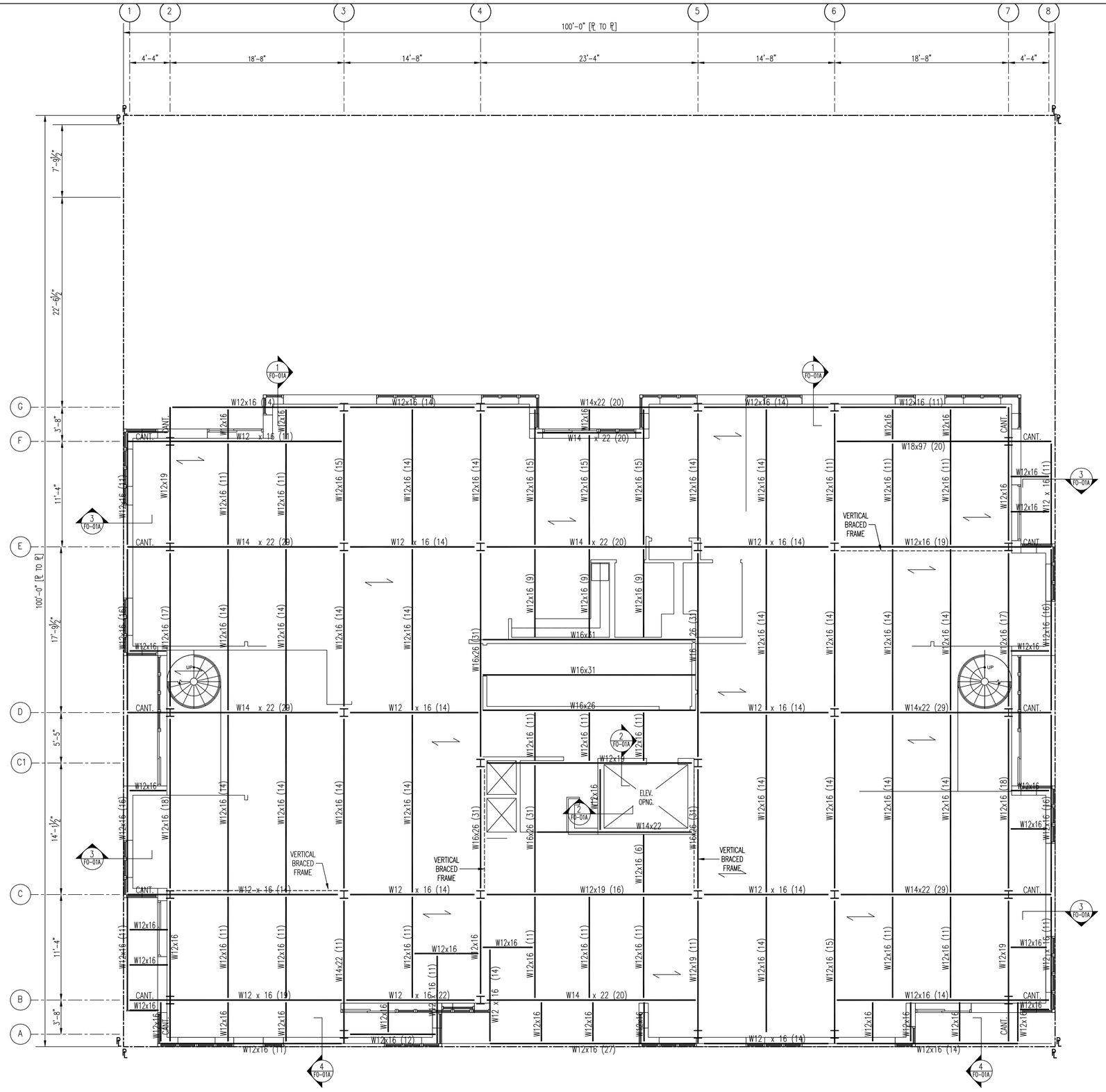

NOTES

1. FIFTH FLOOR TOP OF SLAB ELEV. +54.50'.
2. FIFTH FLOOR TOP OF STEEL ELEV. +54.04'.
3. SLAB SHALL BE 4,000 PSI 3 1/2" LIGHT WEIGHT CONCRETE ON 2" DEEP 20 GAGE GALVANIZED METAL DECK AS MANUFACTURED BY UNITED STEEL DECK WITH 6X6XW2.9XW2.9 WELDED WIRE FABRIC.
4. ALL SHOP DRAWINGS FOR STRUCTURAL STEEL, METAL DECK, LIGHT GAUGE METAL FRAMING, CONCRETE MIX DESIGN, CONCRETE MASONRY UNITS, AND REBAR SHALL BE SUBMITTED TO THE ENGINEER FOR REVIEW AND APPROVAL PRIOR TO FABRICATION AND ERECTION.
5. INDICATES METAL DECK/SLAB SPAN DIRECTION.
6. FOR BALANCE OF NOTES AND LEGEND, SEE DWG. S-000.

1 FIFTH FLOOR FRAMING PLAN
SCALE: 3/16"=1'-0"

REVISIONS

NO.	DESCRIPTIONS	DATE

NO.	TO WHOM ISSUED	DATE
1	DOB	-

ISSUES

Tahoe Development Group LLC
8217 153rd Avenue
Howard Beach, NY 11414
Owner
Anthony Gurino
718 835 4700

Michael Muroff Architect, LLC
333 Hudson Street, Suite 501
New York, NY 10013
Architect
Michael Muroff
646 230 7111

Structural Engineering Systems, PLLC
214-41 42nd Avenue, Suite 2B
Bayside, NY 11361
Structural Engineer
Joseph Gulino
718 224 7161

S. Schwartz Engineering, PLLC
15 West 39th Street, Suite PH
New York, NY 10018
MEP Engineer
Simon Schwartz
212 695 3509

THIS DRAWING IS AN INSTRUMENT OF SERVICE AND SHALL REMAIN THE PROPERTY OF MICHAEL MUROFF ARCHITECT,L.L.C. WHETHER THE PROJECT FOR WHICH IT IS MADE IS EXECUTED OR NOT. THE REPRODUCTION OF THIS DRAWING SHALL NOT BE USED BY THE OWNER OR OTHERS ON OTHER PROJECTS EXCEPT BY AGREEMENT IN WRITING AND WITH APPROPRIATE COMPENSATION TO MICHAEL MUROFF ARCHITECT,L.L.C. THE OWNER SHALL HAVE THE RIGHT TO RETAIN MUROFF ARCHITECT,L.L.C. SUBMISSION OR DISTRIBUTION TO MEET OFFICIAL REGULATORY REQUIREMENTS OR FOR OTHER PURPOSES IN CONNECTION WITH THE PROJECT IS NOT TO BE CONSTRUED AS PUBLICATION IN DEROGATION OF THE RIGHTS OF MICHAEL MUROFF ARCHITECT,L.L.C. REPRODUCTION OR PUBLICATION BY ANY METHOD IN WHOLE OR IN PART IS PROHIBITED. TITLE TO THIS DRAWING BELONGS TO MICHAEL MUROFF ARCHITECT,L.L.C. WITHOUT PREJUDICE.

THE FIRM OF MICHAEL MUROFF ARCHITECT,L.L.C. HAS NOT BEEN RETAINED TO DO FIELD SUPERVISION OR INSPECTION. THE FIRM OF MICHAEL MUROFF ARCHITECT,L.L.C. IT'S PRINCIPLES, EMPLOYEES, AND CONSULTANTS HAVE NOT BEEN RETAINED TO PROVIDE ANY SERVICES RELATED TO ASBESTOS IN ANY FORM. THE FIRM OF MICHAEL MUROFF ARCHITECT,L.L.C. IT'S PRINCIPLES, EMPLOYEES, AND CONSULTANTS DO NOT ASSUME ANY RESPONSIBILITY AND ALSO DO NOT SPECIFY OR MAKE RECOMMENDATIONS RELATED TO ASBESTOS IN ANY FORM. ASBESTOS EXPOSURE ASSESSMENTS, APPRAISALS, ASBESTOS HEALTH HAZARDS OR EXPOSURE, CORRECTIVE ACTION PROGRAMS, OR ASBESTOS CONTAINMENT OR REMOVAL PROGRAMS. THE OWNER OF THIS BUILDING HAS RETAINED AN INDEPENDENT ASBESTOS CONSULTANT. ALL INQUIRIES SHOULD BE DIRECTED TO THE OWNER OR HIS ASBESTOS CONSULTANT. IT IS A VIOLATION OF THE PROFESSIONAL LICENSE LAW FOR ANY PERSON TO ALTER THIS DRAWING IN ANY WAY UNLESS ACTING UNDER THE DIRECTION OF A LICENSED PROFESSIONAL ENGINEER. ADDITIONS AND ALTERATIONS MUST BEAR THE SEAL AND THE NOTATION "ALTERED BY" FOLLOWED BY HIS SIGNAURE AND DATE OF ALTERATION AND A SPECIFIC DESCRIPTION OF THE ALTERATION.

Michael Muroff Architect, LLC
333 Hudson Street
Suite 501
New York, NY 10013
Tel: 646. 230. 7111
Fax: 646. 230. 7277
NY Licence #015011

221-227
EAST 138th STREET

NYC DOB BIN: 2000973, 2000974
Block: 2340 Lots: 56, 58

FIFTH FLOOR FRAMING PLAN

STATE OF NEW YORK · JOSEPH ANTHONY GULINO · 070916 · LICENSED PROFESSIONAL ENGINEER

Date: 1-14-15
Scale: As Noted
Project No. : 14-165
Drawing By: EGK
Checked By: JAG

S-005.00

SHEET # 9 OF 27

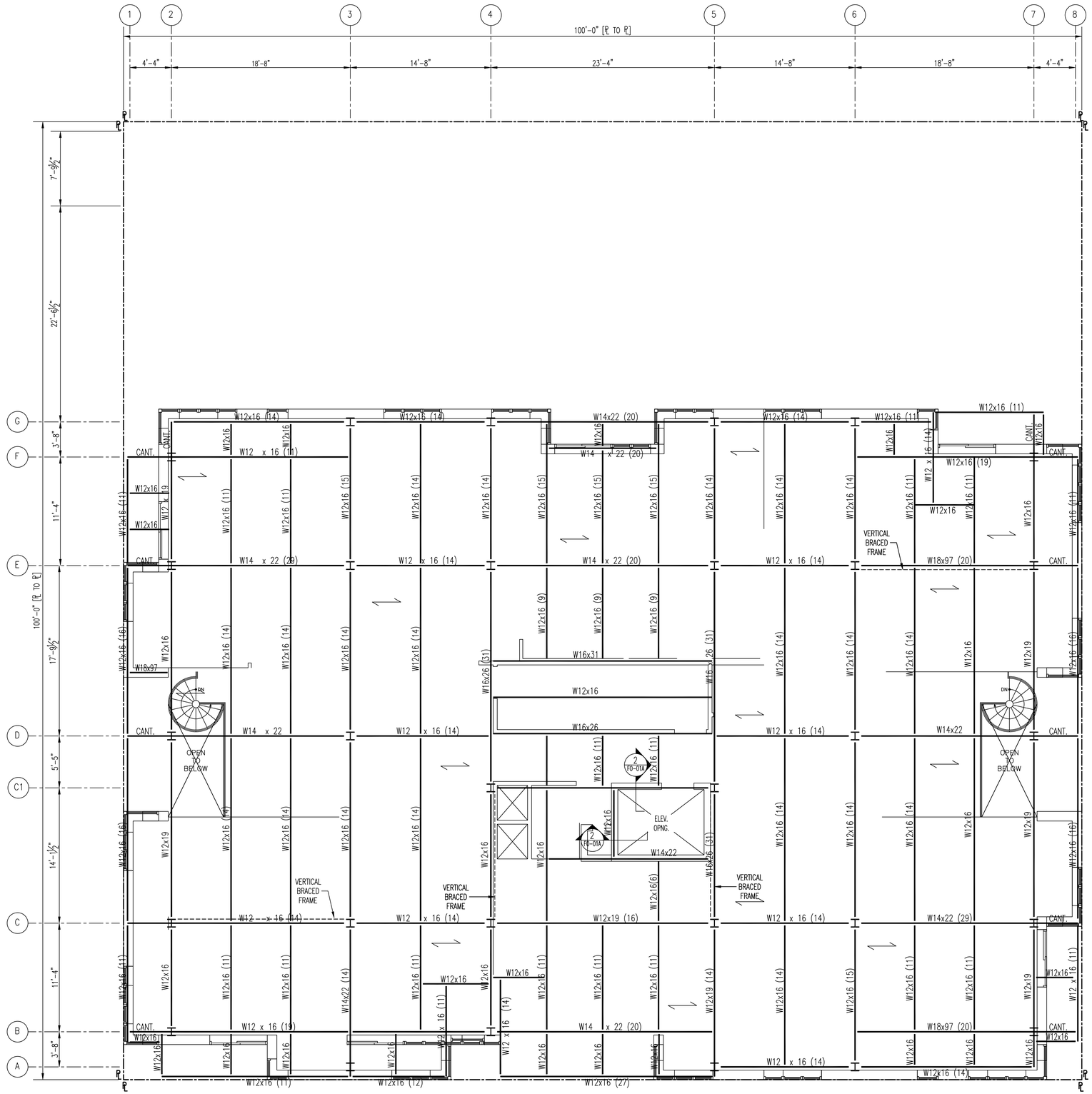

NOTES

1. SIXTH FLOOR TOP OF SLAB ELEV. +64.50'.
2. SIXTH FLOOR TOP OF STEEL ELEV. +64.04'.
3. SLAB SHALL BE 4,000 PSI 3 1/2" LIGHT WEIGHT CONCRETE ON 2" DEEP 20 GAGE GALVANIZED METAL DECK AS MANUFACTURED BY UNITED STEEL DECK WITH 6X6XW2.9XW2.9 WELDED WIRE FABRIC.
4. ALL SHOP DRAWINGS FOR STRUCTURAL STEEL, METAL DECK, LIGHT GAUGE METAL FRAMING, CONCRETE MIX DESIGN, CONCRETE MASONRY UNITS, AND REBAR SHALL BE SUBMITTED TO THE ENGINEER FOR REVIEW AND APPROVAL PRIOR TO FABRICATION AND ERECTION.
5. INDICATES METAL DECK/SLAB SPAN DIRECTION.
6. FOR BALANCE OF NOTES AND LEGEND, SEE DWG. S-000.

1 SIXTH FLOOR FRAMING PLAN
SCALE: 3/16"=1'-0"

REVISIONS

NO.	DESCRIPTIONS	DATE

NO.	TO WHOM ISSUED	DATE
1	DOB	-

ISSUES

Tahoe Development Group LLC
8217 153rd Avenue
Howard Beach, NY 11414
Owner
Anthony Gurino
718 835 4700

Michael Muroff Architect, LLC
333 Hudson Street, Suite 501
New York, NY 10013
Architect
Michael Muroff
646 230 7111

Structural Engineering Systems, PLLC
214-41 42nd Avenue, Suite 2B
Bayside, NY 11361
Structural Engineer
Joseph Gulino
718 224 7161

S. Schwartz Engineering, PLLC
15 West 39th Street, Suite PH
New York, NY 10018
MEP Engineer
Simon Schwartz
212 695 3505

THIS DRAWING IS AN INSTRUMENT OF SERVICE AND SHALL REMAIN THE PROPERTY OF MICHAEL MUROFF ARCHITECT,L.L.C. WHETHER THE PROJECT FOR WHICH IT IS MADE IS EXECUTED OR NOT. THIS DRAWING SHALL NOT BE USED BY THE OWNER OR OTHERS ON OTHER PROJECTS FOR ADDITIONS TO THIS PROJECT OR FOR COMPLETION OF THIS PROJECT BY OTHERS EXCEPT BY AGREEMENT IN WRITING WITH MICHAEL MUROFF ARCHITECT,L.L.C. SUBMISSION OR DISTRIBUTION TO MEET OFFICIAL REGULATORY REQUIREMENTS OR FOR OTHER PURPOSES IN CONNECTION WITH THE PROJECT IS NOT TO BE CONSTRUED AS PUBLICATION IN VIOLATION OF THE RIGHTS OF MICHAEL MUROFF ARCHITECT,L.L.C. REPRODUCTION OR PUBLICATION BY ANY METHOD IN WHOLE OR IN PART IS PROHIBITED. TITLE TO THIS DRAWING BELONGS TO MICHAEL MUROFF ARCHITECT,L.L.C. WITHOUT PREJUDICE.

THE FIRM OF MICHAEL MUROFF ARCHITECT,L.L.C. HAS NOT BEEN RETAINED TO DO FIELD SUPERVISION OR INSPECTION. THE FIRM OF MICHAEL MUROFF ARCHITECT,L.L.C., ITS PRINCIPLES, EMPLOYEES, AND CONSULTANTS HAVE NOT BEEN RETAINED TO PROVIDE ANY SERVICES RELATED TO ASBESTOS, TOXIC WASTE, OR HAZARDOUS MATERIALS, THEIR REMOVAL, ABATEMENTS, OR ENCAPSULATING. MICHAEL MUROFF ARCHITECT,L.L.C. ALSO DO NOT OPEN OR MAKE RECOMMENDATIONS RELATED TO ASBESTOS IN ANY FORM. ASBESTOS EXPOSURE ASSESSMENTS, APPRAISAL, REMOVAL, OR ABATEMENT SHOULD BE DIRECTED TO THE OWNER OR HIS ASBESTOS CONSULTANT. ALL INQUIRIES SHOULD BE DIRECTED TO THE OWNER OF THIS BUILDING AND REFERRED AND INDEPENDENT ASBESTOS CONSULTANT. ALL INQUIRIES SHOULD BE DIRECTED TO THE OWNER OR HIS ASBESTOS CONSULTANT. IT IS A VIOLATION OF THE PROFESSIONAL LICENSE LAW FOR ANY PERSON TO ALTER THIS DRAWING IN ANY WAY UNLESS ACTING UNDER THE DIRECTION OF A REGISTERED ARCHITECT. THE ALTERING ARCHITECT SHALL AFFIX HIS SEAL AND THE NOTATION "ALTERED BY" FOLLOWED BY HIS SIGNATURE AND DATE OF ALTERATION AND A SPECIFIC DESCRIPTION OF THE ALTERATION.

Michael Muroff Architect, LLC
333 Hudson Street
Suite 501
New York, NY 10013
Tel: 646. 230. 7111
Fax: 646. 230. 7277
NY Licence #015011

221-227
EAST 138th STREET

NYC DOB BIN: 2000973, 2000974
Block: 2340 Lots: 56, 58

SIXTH FLOOR
FRAMING PLAN

STATE OF NEW YORK
JOSEPH ANTHONY GULINO
070916
LICENSED PROFESSIONAL ENGINEER

Date: 1-14-15
Scale: As Noted
Project No.: 14-165
Drawing By: EGK
Checked By: JAG

S-006.00

SHEET # 10 OF 27

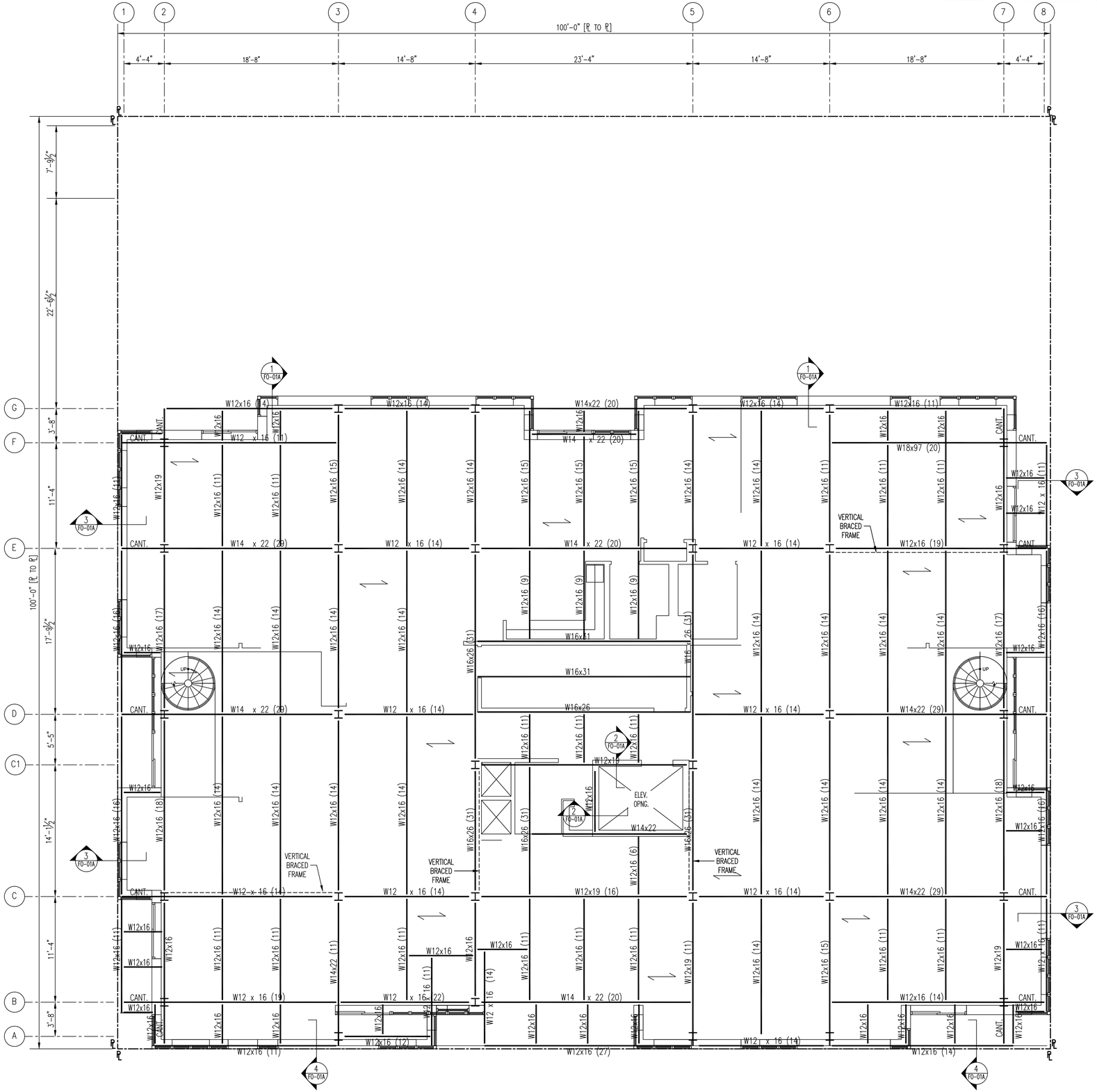

NOTES

1. SIXTH FLOOR TOP OF SLAB ELEV. +74.50'.
2. SIXTH FLOOR TOP OF STEEL ELEV. +74.04'.
3. SLAB SHALL BE 4,000 PSI 3 1/2" LIGHT WEIGHT CONCRETE ON 2" DEEP 20 GAGE GALVANIZED METAL DECK AS MANUFACTURED BY UNITED STEEL DECK WITH 6X6XW2.9XW2.9 WELDED WIRE FABRIC.
4. ALL SHOP DRAWINGS FOR STRUCTURAL STEEL, METAL DECK, LIGHT GAUGE METAL FRAMING, CONCRETE MIX DESIGN, CONCRETE MASONRY UNITS, AND REBAR SHALL BE SUBMITTED TO THE ENGINEER FOR REVIEW AND APPROVAL PRIOR TO FABRICATION AND ERECTION.
5. INDICATES METAL DECK/SLAB SPAN DIRECTION.
6. FOR BALANCE OF NOTES AND LEGEND, SEE DWG. S-000.

1 SEVENTH FLOOR FRAMING PLAN
SCALE: 3/16"=1'-0"

REVISIONS

NO.	DESCRIPTIONS	DATE

NO.	TO WHOM ISSUED	DATE
1	DOB	-

ISSUES

Tahoe Development Group LLC — Owner
8217 153rd Avenue — Anthony Gurino
Howard Beach, NY 11414 — 718 835 4700

Michael Muroff Architect, LLC — Architect
333 Hudson Street, Suite 501 — Michael Muroff
New York, NY 10013 — 646 230 7111

Structural Engineering Systems, PLLC — Structural Engineer
214-41 42nd Avenue, Suite 2B — Joseph Gulino
Bayside, NY 11361 — 718 224 7161

S. Schwartz Engineering, PLLC — MEP Engineer
15 West 39th Street, Suite PH — Simon Schwartz
New York, NY 10018 — 212 695 3509

THIS DRAWING IS AN INSTRUMENT OF SERVICE AND SHALL REMAIN THE PROPERTY OF MICHAEL MUROFF ARCHITECT,L.L.C. WHETHER THE PROJECT FOR WHICH IT IS MADE IS EXECUTED OR NOT. THE REUSE OF THIS DRAWING SHALL NOT BE USED BY THE OWNER OR OTHERS ON OTHER PROJECTS, FOR ADDITIONS TO THIS PROJECT, OR FOR COMPLETING THIS PROJECT BY OTHERS, EXCEPT BY AGREEMENT IN WRITING AND WITH APPROPRIATE COMPENSATION TO MICHAEL MUROFF ARCHITECT,L.L.C. SUBMISSION OR DISTRIBUTION TO MEET OFFICIAL REGULATORY REQUIREMENTS OR FOR OTHER PURPOSES IN CONNECTION WITH THE PROJECT IS NOT TO BE CONSTRUED AS PUBLICATION IN DEROGATION OF THE RIGHTS OF MICHAEL MUROFF ARCHITECT,L.L.C. REPRODUCTION OR PUBLICATION BY ANY METHOD IN WHOLE OR IN PART IS PROHIBITED. TITLE TO THIS DRAWING BELONGS TO MICHAEL MUROFF ARCHITECT,L.L.C. WITHOUT PREJUDICE.

THE FIRM OF MICHAEL MUROFF ARCHITECT,L.L.C. HAS NOT BEEN RETAINED TO DO FIELD SUPERVISION OR INSPECTION. THE FIRM OF MICHAEL MUROFF ARCHITECT,L.L.C. IT'S PRINCIPLES, EMPLOYEES, AND CONSULTANTS HAVE NOT BEEN RETAINED TO PROVIDE ANY SERVICES RELATED TO ASBESTOS, ASBESTOS HAZARD ASSESSMENT, ASBESTOS MANAGEMENT, ASBESTOS ABATEMENT, ASBESTOS REMOVAL, ASBESTOS DISPOSAL AND ALSO DO NOT OPERATE OR MAKE RECOMMENDATIONS RELATED TO ASBESTOS IN ANY FORM. ASBESTOS, ASBESTOSBASED MATERIALS, ASBESTOS HEALTH HAZARDS OR EXPOSURE, CORRECTIVE ACTION PROGRAMS, OR ASBESTOS ENGINEERING OR REMOVAL PROGRAMS. THE OWNER OF THIS BUILDING HAS RETAINED AN INDEPENDENT ASBESTOS CONSULTANT. ALL INQUIRIES SHOULD BE DIRECTED TO THE OWNER OR HIS ASBESTOS CONSULTANT. IT IS A VIOLATION OF THE PROFESSIONAL LICENSE LAW FOR ANY PERSON TO ALTER THIS DRAWING IN ANY WAY UNLESS ACTING UNDER THE DIRECTION OF A REGISTERED ARCHITECT. NEW YORK STATE EDUCATION LAW ARTICLE 145, AND THE NEGRIGO "ALTERED BY" FOLLOWED BY HIS SIGNAURE AND DATE OF ALTERATION AND A SPECIFIC DESCRIPTION OF THE ALTERATION.

Michael Muroff Architect, LLC
333 Hudson Street
Suite 501
New York, NY 10013
Tel: 646. 230. 7111
Fax: 646. 230. 7277
NY Licence #015011

221-227
EAST 138th STREET

NYC DOB BIN: 2000973, 2000974
Block: 2340 Lots: 56, 58

SEVENTH FLOOR
FRAMING PLAN

STATE OF NEW YORK · JOSEPH ANTHONY GULINO · 070916 · LICENSED PROFESSIONAL ENGINEER

Date: 1-14-15
Scale: As Noted
Project No. : 14-165
Drawing By: EGK
Checked By: JAG

S-007.00

SHEET # 11 OF 27

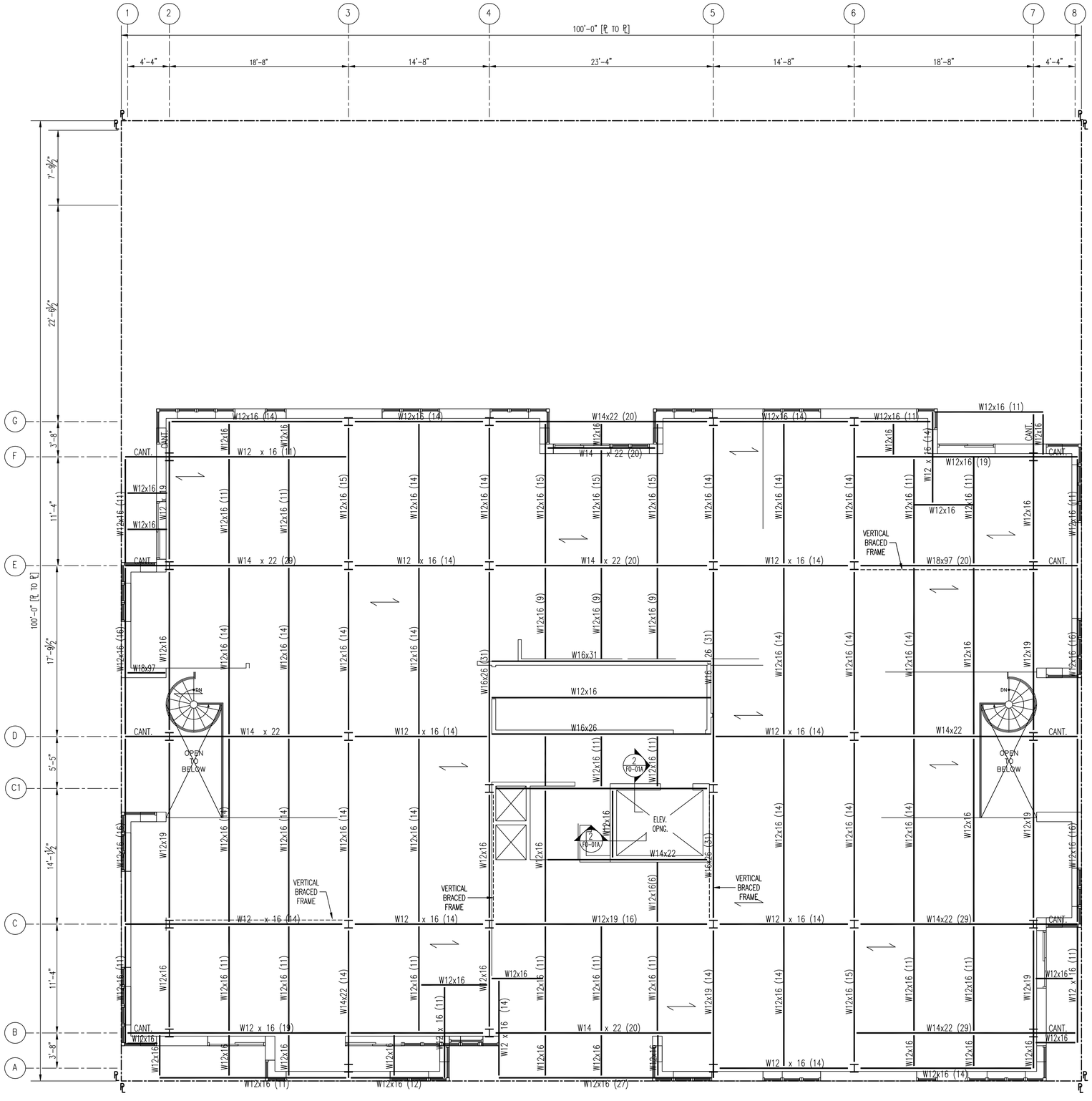

NOTES

1. EIGHTH FLOOR TOP OF SLAB ELEV. +84.50'.
2. EIGHTH FLOOR TOP OF STEEL ELEV. +84.04'.
3. SLAB SHALL BE 4,000 PSI 3 1/2" LIGHT WEIGHT CONCRETE ON 2" DEEP 20 GAGE GALVANIZED METAL DECK AS MANUFACTURED BY UNITED STEEL DECK WITH 6X6XW2.9XW2.9 WELDED WIRE FABRIC.
4. ALL SHOP DRAWINGS FOR STRUCTURAL STEEL, METAL DECK, LIGHT GAUGE METAL FRAMING, CONCRETE MIX DESIGN, CONCRETE MASONRY UNITS, AND REBAR SHALL BE SUBMITTED TO THE ENGINEER FOR REVIEW AND APPROVAL PRIOR TO FABRICATION AND ERECTION.
5. INDICATES METAL DECK/SLAB SPAN DIRECTION.
6. FOR BALANCE OF NOTES AND LEGEND, SEE DWG. S-000.

1 EIGHTH FLOOR FRAMING PLAN
SCALE: 3/16"=1'-0"

REVISIONS

NO.	DESCRIPTIONS	DATE

NO.	TO WHOM ISSUED	DATE
1	DOB	-

ISSUES

Tahoe Development Group LLC — Owner
8217 153rd Avenue — Anthony Gurino
Howard Beach, NY 11414 — 718 835 4700

Michael Muroff Architect, LLC — Architect
333 Hudson Street, Suite 501 — Michael Muroff
New York, NY 10013 — 646 230 7111

Structural Engineering Systems, PLLC — Structural Engineer
214-41 42nd Avenue, Suite 2B — Joseph Gulino
Bayside, NY 11361 — 718 224 7161

S. Schwartz Engineering, PLLC — MEP Engineer
15 West 39th Street, Suite PH — Simon Schwartz
New York, NY 10018 — 212 695 3509

THIS DRAWING IS AN INSTRUMENT OF SERVICE AND SHALL REMAIN THE PROPERTY OF MICHAEL MUROFF ARCHITECT,L.L.C., WHETHER THE PROJECT FOR WHICH IT IS MADE IS EXECUTED OR NOT. THIS DRAWING SHALL NOT BE USED BY THE OWNER OR OTHERS ON OTHER PROJECTS, FOR ADDITIONS TO THIS PROJECT OR FOR COMPLETION OF THIS PROJECT BY OTHERS, EXCEPT BY AGREEMENT IN WRITING WITH MICHAEL MUROFF ARCHITECT,L.L.C.. SUBMISSION OR DISTRIBUTION TO MEET OFFICIAL REGULATORY REQUIREMENTS OR FOR OTHER PURPOSES IN CONNECTION WITH THE PROJECT IS NOT TO BE CONSTRUED AS PUBLICATION IN DERROGATION OF THE RIGHTS OF MICHAEL MUROFF ARCHITECT,L.L.C. EXCEPT AS OTHERWISE EXPRESSLY PROVIDED. REPRODUCTION BY ANY METHOD IN WHOLE OR IN PART IS PROHIBITED. TITLE TO THIS DRAWING BELONGS TO MICHAEL MUROFF ARCHITECT,L.L.C. WITHOUT PREJUDICE.

THE FIRM OF MICHAEL MUROFF ARCHITECT,L.L.C. HAS NOT BEEN RETAINED TO DO FIELD SUPERVISION OR INSPECTION. THE FIRM OF MICHAEL MUROFF ARCHITECT,L.L.C. ITS PRINCIPALS, EMPLOYEES, AND CONSULTANTS HAVE NOT BEEN RETAINED TO PROVIDE ANY SERVICES RELATED TO ASBESTOS, TOXIC WASTE, OR HAZARDOUS MATERIALS. THEIR REMOVAL, ABATEMENT, OR ENCAPSULATING. MICHAEL MUROFF ARCHITECT,L.L.C. ITS AL, DO NOT SPECIFY OR MAKE RECOMMENDATIONS RELATED TO ASBESTOS IN ANY FORM, ASBESTOS EXPOSURE ASSESSMENTS, APPRAISALS, ASBESTOS HEALTH HAZARDS OR EXPOSURE, CORRECTIVE ACTION PROGRAMS, OR ASBESTOS CONTAINMENT OR REMOVAL PROGRAMS. THE OWNER OR ITS AGENTS SHALL HIRE AN ASBESTOS CONSULTANT TO PERFORM ASBESTOS SURVEYS, ASSESSMENTS, AND ANY ACTIONS RELATED TO ASBESTOS. ASBESTOS CONSULTANT. IT IS A VIOLATION OF THE PROFESSIONAL LICENSE LAW FOR ANY PERSON TO ALTER THIS DRAWING IN ANY WAY UNLESS ACTING UNDER THE DIRECTION OF A REGISTERED ARCHITECT. THE ALTERING ARCHITECT SHALL AFFIX HIS SEAL AND THE NOTATION "ALTERED BY" FOLLOWED BY HIS SIGNATURE AND DATE OF ALTERATION AND A SPECIFIC DESCRIPTION OF THE ALTERATION.

Michael Muroff Architect, LLC
333 Hudson Street
Suite 501
New York, NY 10013
Tel: 646. 230. 7111
Fax: 646. 230. 7277
NY Licence #015011

221-227
EAST 138th STREET

NYC DOB BIN: 2000973, 2000974
Block: 2340 Lots: 56, 58

EIGHTH FLOOR
FRAMING PLAN

STATE OF NEW YORK · JOSEPH ANTHONY GULINO · 070916 · LICENSED PROFESSIONAL ENGINEER

Date: 1-14-15
Scale: As Noted
Project No.: 14-165
Drawing By: EGK
Checked By: JAG

S-008.00

SHEET # 12 OF 27

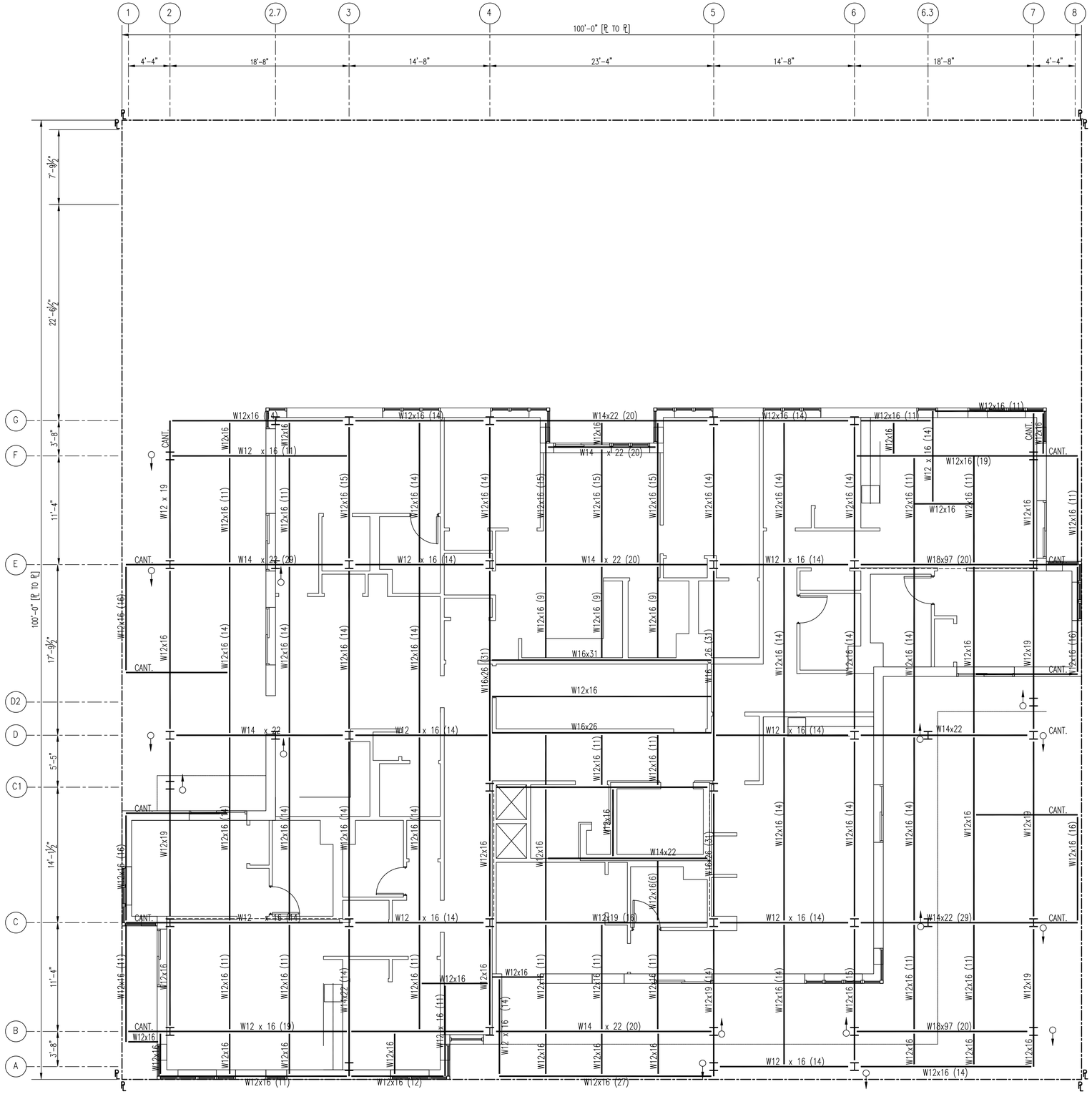

NOTES

1. NINTH FLOOR TOP OF SLAB ELEV. +94.50'.
2. NINTH FLOOR TOP OF STEEL ELEV. +94.04'.
3. SLAB SHALL BE 4,000 PSI 3 1/2" LIGHT WEIGHT CONCRETE ON 2" DEEP 20 GAGE GALVANIZED METAL DECK AS MANUFACTURED BY UNITED STEEL DECK WITH 6X6XW2.9XW2.9 WELDED WIRE FABRIC.
4. ALL SHOP DRAWINGS FOR STRUCTURAL STEEL, METAL DECK, LIGHT GAUGE METAL FRAMING, CONCRETE MIX DESIGN, CONCRETE MASONRY UNITS, AND REBAR SHALL BE SUBMITTED TO THE ENGINEER FOR REVIEW AND APPROVAL PRIOR TO FABRICATION AND ERECTION.
5. INDICATES METAL DECK/SLAB SPAN DIRECTION.
6. FOR BALANCE OF NOTES AND LEGEND, SEE DWG. S-000.

1 NINTH FLOOR FRAMING PLAN
SCALE: 3/16"=1'-0"

REVISIONS

NO.	DESCRIPTIONS	DATE

NO.	TO WHOM ISSUED	DATE
1	DOB	-

ISSUES

Tahoe Development Group LLC
8217 153rd Avenue
Howard Beach, NY 11414
Owner
Anthony Gurino
718 835 4700

Michael Muroff Architect, LLC
333 Hudson Street, Suite 501
New York, NY 10013
Architect
Michael Muroff
646 230 7111

Structural Engineering Systems, PLLC
214-41 42nd Avenue, Suite 2B
Bayside, NY 11361
Structural Engineer
Joseph Gulino
718 224 7161

S. Schwartz Engineering, PLLC
15 West 39th Street, Suite PH
New York, NY 10018
MEP Engineer
Simon Schwartz
212 695 3509

THIS DRAWING IS AN INSTRUMENT OF SERVICE AND SHALL REMAIN THE PROPERTY OF MICHAEL MUROFF ARCHITECT,LLC. WHETHER THE PROJECT FOR WHICH IT IS MADE IS EXECUTED OR NOT. THE REPRODUCTION, ALTERATION OR USE OF THIS DRAWING WITHOUT THE WRITTEN CONSENT OF MICHAEL MUROFF ARCHITECT,LLC. IS FORBIDDEN. THE ARCHITECT WILL NOT BE RESPONSIBLE FOR ADDITIONS TO THIS PROJECT OR FOR COMPLETION OF THIS PROJECT BY OTHERS EXCEPT BY AGREEMENT IN WRITING WITH MICHAEL MUROFF ARCHITECT,LLC. SUBMISSION OR DISTRIBUTION TO MEET OFFICIAL REGULATORY REQUIREMENTS OR FOR OTHER PURPOSES IN CONNECTION WITH THE PROJECT IS NOT TO BE CONSTRUED AS PUBLICATION IN DEROGATION OF THE RIGHTS OF MICHAEL MUROFF ARCHITECT,LLC. REPRODUCTION OR PUBLICATION BY ANY METHOD IN WHOLE OR IN PART IS PROHIBITED. TITLE TO THIS DRAWING BELONGS TO MICHAEL MUROFF ARCHITECT,LLC. WITHOUT PREJUDICE.

THE FIRM OF MICHAEL MUROFF ARCHITECT,LLC. HAS NOT BEEN RETAINED TO DO FIELD SUPERVISION OR INSPECTION. THE FIRM OF MICHAEL MUROFF ARCHITECT,LLC. DOES NOT HAVE AUTHORITY OVER THE CONTRACTORS ON THE PROJECT AND THEREFORE CANNOT GUARANTEE THE ABSENCE OF ASBESTOS, TOXIC WASTE, OR HAZARDOUS MATERIALS. THE ADDITION, AMENDMENTS, OR EXCAVATIONS, MICHAEL MUROFF ARCHITECT,LLC. DO NOT SPECIFY OR MAKE RECOMMENDATIONS RELATED TO ASBESTOS IN ANY FORM. ASBESTOS EXPOSURE ASSESSMENTS, APPRAISALS, ASBESTOS HEALTH HAZARDS OR EXPOSURE, CORRECTIVE ACTION PROGRAMS, OR ASBESTOS CONTAINMENT OR REMOVAL PROGRAMS. THE OWNER OF THIS BUILDING HAS RETAINED AN INDEPENDENT ASBESTOS CONSULTANT. ALL INQUIRIES SHOULD BE DIRECTED TO THE OWNER OR HIS ASBESTOS CONSULTANT. ALL DRAWINGS, SPECIFICATIONS, REPORTS, PLANS, OR OTHER DOCUMENTS OR WORK PRODUCT OF THE ARCHITECT UNLESS ACTING UNDER THE DIRECTION OF A REGISTERED ARCHITECT, THE ALTERING ARCHITECT SHALL AFFIX HIS SEAL AND THE NOTATION "ALTERED BY" FOLLOWED BY HIS SIGNATURE AND DATE OF ALTERATION AND A SPECIFIC DESCRIPTION OF THE ALTERATION.

Michael Muroff Architect, LLC
333 Hudson Street
Suite 501
New York, NY 10013
Tel: 646. 230. 7111
Fax: 646. 230. 7277
NY Licence #015011

221-227
EAST 138th STREET

NYC DOB BIN: 2000973, 2000974
Block: 2340 Lots: 56, 58

NINTH FLOOR
FRAMING PLAN

STATE OF NEW YORK · JOSEPH ANTHONY GULINO · 070916 · LICENSED PROFESSIONAL ENGINEER

Date: 1-14-15
Scale: As Noted
Project No.: 14-165
Drawing By: EGK
Checked By: JAG

S-009.00

SHEET # 13 OF 27

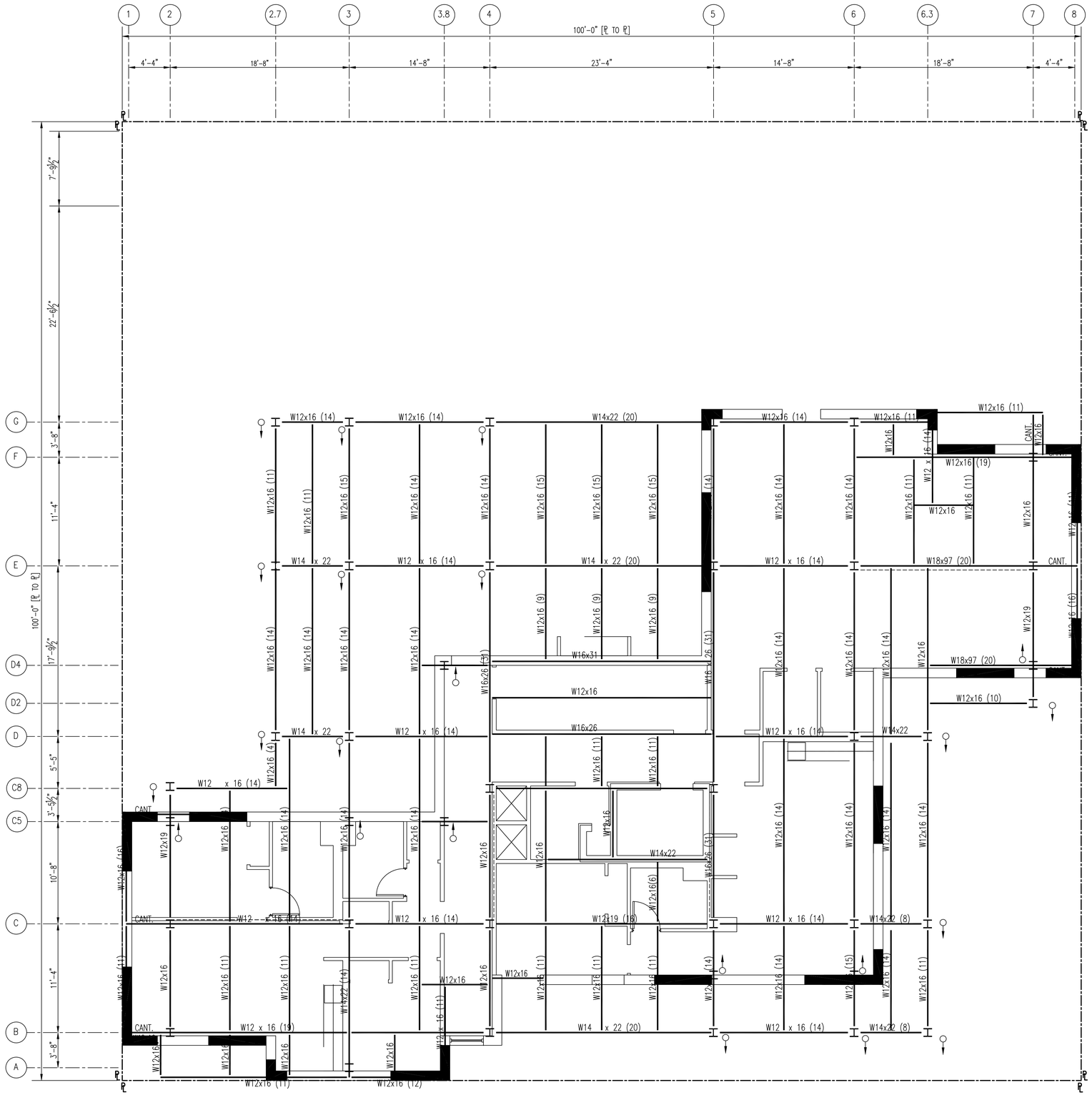

NOTES

1. TENTH FLOOR TOP OF SLAB ELEV. +104.50'.
2. TENTH FLOOR TOP OF STEEL ELEV. +104.04'.
3. SLAB SHALL BE 4,000 PSI 3 1/2" LIGHT WEIGHT CONCRETE ON 2" DEEP 20 GAGE GALVANIZED METAL DECK AS MANUFACTURED BY UNITED STEEL DECK WITH 6X6XW2.9XW2.9 WELDED WIRE FABRIC.
4. ALL SHOP DRAWINGS FOR STRUCTURAL STEEL, METAL DECK, LIGHT GAUGE METAL FRAMING, CONCRETE MIX DESIGN, CONCRETE MASONRY UNITS, AND REBAR SHALL BE SUBMITTED TO THE ENGINEER FOR REVIEW AND APPROVAL PRIOR TO FABRICATION AND ERECTION.
5. INDICATES METAL DECK/SLAB SPAN DIRECTION.
6. FOR BALANCE OF NOTES AND LEGEND, SEE DWG. S-000.

1 TENTH FLOOR FRAMING PLAN
SCALE: 3/16"=1'-0"

REVISIONS

NO.	DESCRIPTIONS	DATE

NO.	TO WHOM ISSUED	DATE
1	DOB	-

ISSUES

Tahoe Development Group LLC
8217 153rd Avenue
Howard Beach, NY 11414
Owner
Anthony Gurino
718 835 4700

Michael Muroff Architect, LLC
333 Hudson Street, Suite 501
New York, NY 10013
Architect
Michael Muroff
646 230 7111

Structural Engineering Systems, PLLC
214-41 42nd Avenue, Suite 2B
Bayside, NY 11361
Structural Engineer
Joseph Gulino
718 224 7161

S. Schwartz Engineering, PLLC
15 West 39th Street, Suite PH
New York, NY 10018
MEP Engineer
Simon Schwartz
212 695 3509

THIS DRAWING IS AN INSTRUMENT OF SERVICE AND SHALL REMAIN THE PROPERTY OF MICHAEL MUROFF ARCHITECT,L.L.C. WHETHER THE PROJECT FOR WHICH IT IS MADE IS EXECUTED OR NOT. THE REPRODUCTION OF THIS DRAWING SHALL NOT BE USED BY THE OWNER OR OTHERS ON OTHER PROJECTS, EXCEPT BY AGREEMENT IN WRITING AND WITH APPROPRIATE COMPENSATION TO MICHAEL MUROFF ARCHITECT,L.L.C. THE OWNER SHALL NOTIFY MICHAEL MUROFF ARCHITECT,L.L.C. SUBMISSION OR DISTRIBUTION TO MEET OFFICIAL REGULATORY REQUIREMENTS OR FOR OTHER PURPOSES IN CONNECTION WITH THE PROJECT IS NOT TO BE CONSTRUED AS PUBLICATION IN DEROGATION OF THE RIGHTS OF MICHAEL MUROFF ARCHITECT,L.L.C. REPRODUCTION OR PUBLICATION BY ANY METHOD IN WHOLE OR IN PART IS PROHIBITED. TITLE TO THIS DRAWING RELIGNS TO MICHAEL MUROFF ARCHITECT,L.L.C. WITHOUT PREJUDICE.

THE FIRM OF MICHAEL MUROFF ARCHITECT,L.L.C. HAS NOT BEEN RETAINED TO DO FIELD SUPERVISION OR INSPECTION. THE FIRM OF MICHAEL MUROFF ARCHITECT,L.L.C. IT'S PRINCIPLES, EMPLOYEES, AND CONSULTANTS HAVE NOT BEEN RETAINED TO PROVIDE ANY SERVICES RELATED TO ASBESTOS OR ASBESTOS CONTAINING MATERIALS. THE FIRM OF MICHAEL MUROFF ARCHITECT,L.L.C. IT'S PRINCIPLES, EMPLOYEES, AND CONSULTANTS ALSO DO NOT SPECIFY OR MAKE RECOMMENDATIONS RELATED TO ASBESTOS IN ANY FORM. ASBESTOS EXPOSURE ASSESSMENTS, APPRAISALS, ASBESTOS HEALTH HAZARDS OR EXPOSURES, CORRECTIVE ACTION PROGRAMS, OR ASBESTOS CONTAINMENT OR REMOVAL PROGRAMS. THE OWNER OF THIS BUILDING HAS RETAINED AN INDEPENDENT ASBESTOS CONSULTANT. ALL INQUIRIES SHOULD BE DIRECTED TO THE OWNER OR HIS ASBESTOS CONSULTANT. IT IS A VIOLATION OF THE PROFESSIONAL LICENSE LAW FOR ANY PERSON TO ALTER THIS DRAWING IN ANY WAY UNLESS ACTING UNDER THE DIRECTION OF A LICENSED PROFESSIONAL ENGINEER OR ARCHITECT. ALTERATIONS MUST BEAR THE SEAL AND THE NOTATION "ALTERED BY" FOLLOWED BY HIS SIGNAURE AND DATE OF ALTERATION AND A SPECIFIC DESCRIPTION OF THE ALTERATION.

Michael Muroff Architect, LLC
333 Hudson Street
Suite 501
New York, NY 10013
Tel: 646. 230. 7111
Fax: 646. 230. 7277
NY Licence #015011

221-227
EAST 138th STREET

NYC DOB BIN: 2000973, 2000974
Block: 2340 Lots: 56, 58

TENTH FLOOR
FRAMING PLAN

STATE OF NEW YORK · JOSEPH ANTHONY GULINO · 070916 · LICENSED PROFESSIONAL ENGINEER

Date: 1-14-15
Scale: As Noted
Project No. : 14-165
Drawing By: EGK
Checked By: JAG

S-010.00

SHEET # 14 OF 27

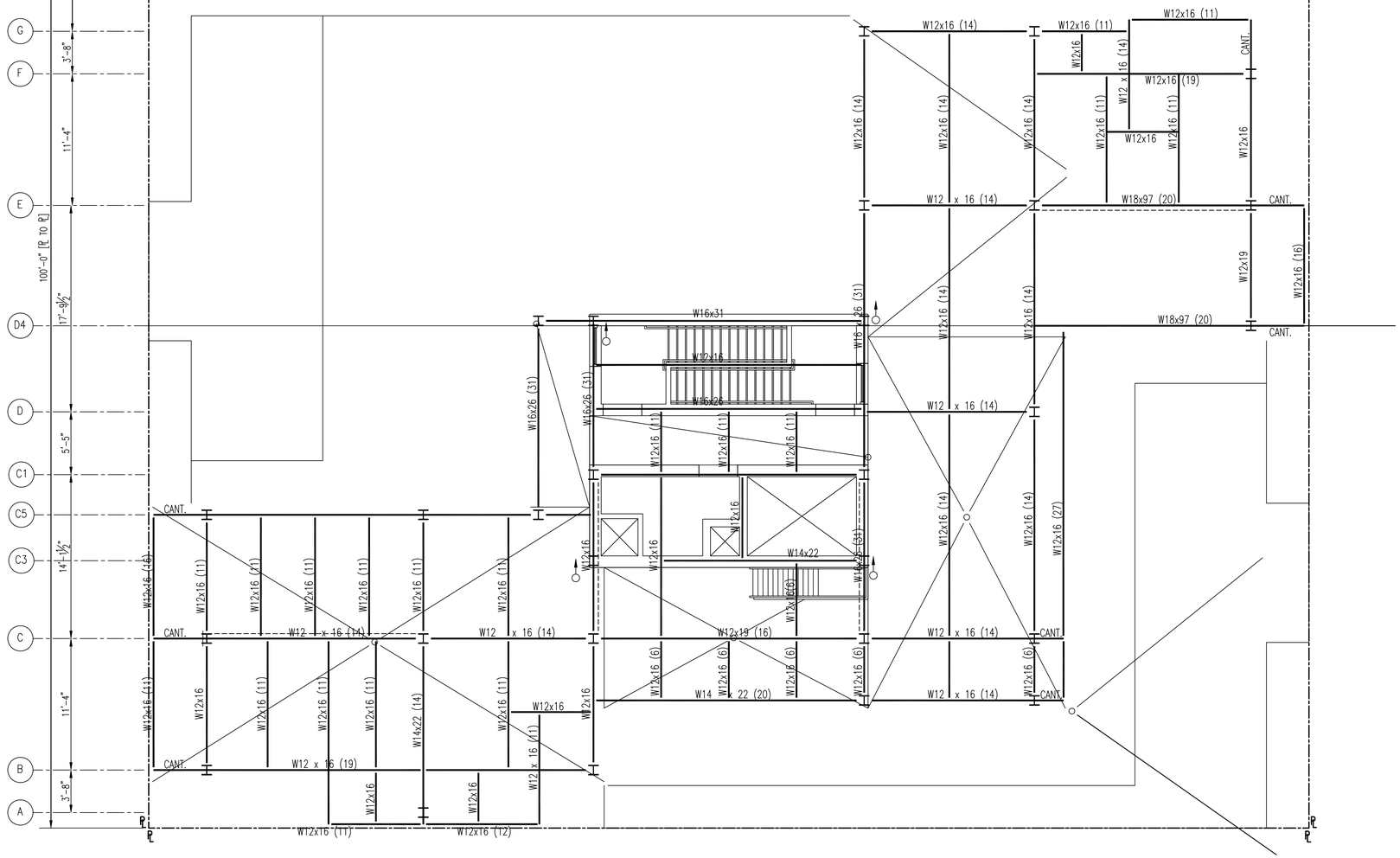

1 — ROOF FLOOR FRAMING PLAN
SCALE: 3/16"=1'-0"

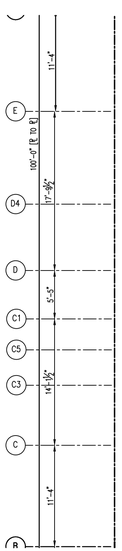

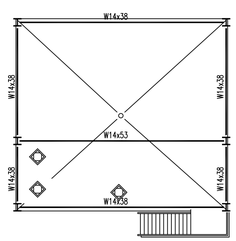

STAIR/BULKHEAD NOTES

1. STAIR/ELEVATOR BULKHEAD ROOF TOP OF SLAB ELEV. +124.50'.
2. STAIR/ELEVATOR BULKHEAD ROOF TOP OF STEEL ELEV. +124.04'
3. SLAB SHALL BE 4,000 PSI 2 1/2" LIGHT WEIGHT CONCRETE ON 1 1/2" DEEP 20 GAGE GALVANIZED METAL DECK AS MANUFACTURED BY UNITED STEEL DECK WITH 6X6XW2.9XW2.9 WELDED WIRE FABRIC.
4. ALL SHOP DRAWINGS FOR STRUCTURAL STEEL, METAL DECK, LIGHT GAUGE METAL FRAMING, CONCRETE MIX DESIGN, CONCRETE MASONRY UNITS, AND REBAR SHALL BE SUBMITTED TO THE ENGINEER FOR REVIEW AND APPROVAL PRIOR TO FABRICATION AND ERECTION.
5. INDICATES METAL DECK/SLAB SPAN DIRECTION.
6. FOR BALANCE OF NOTES AND LEGEND, SEE DWG. S-000.

2 — STAIR & ELEVATOR BULKHEAD ROOF FRAMING PLAN
SCALE: 1/8"=1'-0"

ROOF NOTES

1. ROOF TOP OF SLAB ELEV. +114.50'.
2. ROOF TOP OF STEEL ELEV. +114.04'
3. SLAB SHALL BE 4,000 PSI 2 1/2" LIGHT WEIGHT CONCRETE ON 1 1/2" DEEP 20 GAGE GALVANIZED METAL DECK AS MANUFACTURED BY UNITED STEEL DECK WITH 6X6XW2.9XW2.9 WELDED WIRE FABRIC.
4. ALL SHOP DRAWINGS FOR STRUCTURAL STEEL, METAL DECK, LIGHT GAUGE METAL FRAMING, CONCRETE MIX DESIGN, CONCRETE MASONRY UNITS, AND REBAR SHALL BE SUBMITTED TO THE ENGINEER FOR REVIEW AND APPROVAL PRIOR TO FABRICATION AND ERECTION.
5. INDICATES METAL DECK/SLAB SPAN DIRECTION.
6. FOR BALANCE OF NOTES AND LEGEND, SEE DWG. S-000.

REVISIONS

NO.	DESCRIPTIONS	DATE
1	DOB	–

NO.	TO WHOM ISSUED	DATE

ISSUES

Tahoe Development Group LLC — Owner
8217 153rd Avenue — Anthony Gurino
Howard Beach, NY 11414 — 718 835 4700

Michael Muroff Architect, LLC — Architect
333 Hudson Street, Suite 501 — Michael Muroff
New York, NY 10013 — 646 230 7111

Structural Engineering Systems, PLLC — Structural Engineer
214-41 42nd Avenue, Suite 2B — Joseph Gulino
Bayside, NY 11361 — 718 224 7161

S. Schwartz Engineering, PLLC — MEP Engineer
15 West 39th Street, Suite PH — Simon Schwartz
New York, NY 10018 — 212 695 3509

THIS DRAWING IS AN INSTRUMENT OF SERVICE AND SHALL REMAIN THE PROPERTY OF MICHAEL MUROFF ARCHITECT,L.L.C., WHETHER THE PROJECT FOR WHICH IT IS MADE IS EXECUTED OR NOT. THIS DRAWING SHALL NOT BE USED BY THE OWNER OR OTHERS ON OTHER PROJECTS, FOR ADDITIONS TO THIS PROJECT, OR FOR COMPLETING THIS PROJECT BY OTHERS, EXCEPT BY AGREEMENT IN WRITING WITH MICHAEL MUROFF ARCHITECT,L.L.C. TRANSFER OR DISTRIBUTION OF INSTRUMENTS TO MEET OFFICIAL REGULATORY REQUIREMENTS AR FOR OTHER PURPOSES IN CONNECTION WITH THE PROJECT IS NOT TO BE CONSTRUED AS PUBLICATION IN DEROGATION OF THE RIGHTS OF MICHAEL MUROFF ARCHITECT,L.L.C. REPRODUCTION OR PUBLICATION OF ANY METHOD IN WHOLE OR IN PART IS PROHIBITED. TITLE TO THIS DRAWING BELONGS TO MICHAEL MUROFF ARCHITECT,L.L.C. WITHOUT PREJUDICE.

THE FIRM OF MICHAEL MUROFF ARCHITECT,L.L.C. HAS NOT BEEN RETAINED TO DO FIELD SUPERVISION OR INSPECTION. THE FIRM OF MICHAEL MUROFF ARCHITECT,L.L.C. IT'S PRINCIPLES, EMPLOYEES, AND CONSULTANTS HAVE NOT BEEN RETAINED TO PROVIDE ANY SERVICES RELATED TO ASBESTOS, THIS INCLUDES, BUT NOT LIMITED TO, ASBESTOS MATERIALS, THEIR REMOVAL, ABATEMENT, OR ENCAPSULATION. MICHAEL MUROFF ARCHITECT,L.L.C. IT'S ALL DO NOT PERFORM ANY DOCUMENTATION RELATED TO ASBESTOS OR ASBESTOS CONTAINING MATERIALS, ASBESTOS EXPOSURE ASSESSMENTS, ASBESTOS HAZARD ASSESSMENTS, OR ASBESTOS MANAGEMENT PLANS. THE OWNER OF THE BUILDING HAS RETAINED AN INDEPENDENT ASBESTOS CONSULTANT. ALL INQUIRIES SHOULD BE DIRECTED TO THE OWNER OR HIS ASBESTOS CONSULTANT. IT IS A VIOLATION OF THE PROFESSIONAL LICENSE LAW FOR ANY PERSON TO ALTER THIS DRAWING IN ANY WAY UNLESS ACTING UNDER THE DIRECTION OF A REGISTERED ARCHITECT. THE ALTERING ARCHITECT SHALL AFFIX HIS SEAL AND THE NOTATION "ALTERED BY" FOLLOWED BY HIS SIGNATURE AND DATE OF ALTERATION AND A SPECIFIC DESCRIPTION OF THE ALTERATION.

Michael Muroff Architect, LLC
333 Hudson Street
Suite 501
New York, NY 10013
Tel: 646. 230. 7111
Fax: 646. 230. 7277
NY Licence #015011

221-227
EAST 138th STREET

NYC DOB BIN: 2000973, 2000974
Block: 2340 Lots: 56, 58

ROOF FLOOR & BULKHEAD
ROOF FRAMING PLAN

STATE OF NEW YORK · JOSEPH ANTHONY GULINO · 070916 · LICENSED PROFESSIONAL ENGINEER

Date: 1-14-15
Scale: As Noted
Project No.: 14-165
Drawing By: EGK
Checked By: JAG

S-011.00

SHEET # 15 OF 27

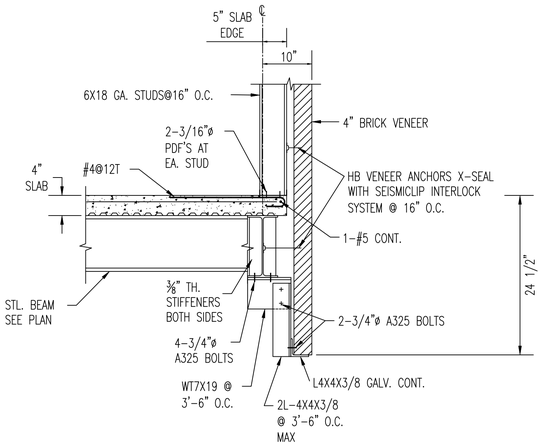

1 S-002 SECTION
SCALE: N.T.S.
S-003
S-004

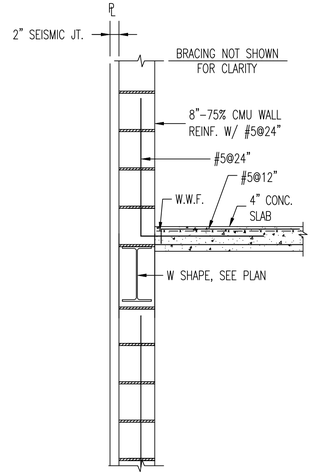

2 S-002 SECTION
SCALE: N.T.S.
S-003
S-004
S-005

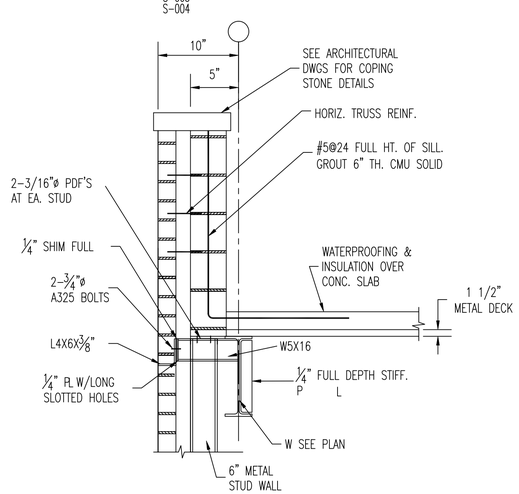

3 S-002 SECTION
SCALE: N.T.S.
S-003
S-004
S-005

COLUMN SCHEDULE

FLOOR \ COL. NO.	A 3	A 5	A 6	B 2	B 4	B 7	C 2	C 3	C 4	C 5	C 6	C 7	C.8 4	C.8 5	D 2	D 3	D 6	D 7	E 2	E 3	E 4	E 5	E 6	E 7	F 2	F 7	G 3	G 4	G 5	G 6
ROOF																														
EL. +123.54'	45	45		45	45		79	79	79	79	45		79	79			45					45	79	79		45			45	45
TENTH FLOOR	X	X		X	X		X	X	X	X	X		X	X			X					X	X	X		X			X	X
EL. +113.21' (TYP. SPUCE LINE 4'-0")	W10	W10		W10	W10		W12	W12	W12	W12	W10		W12	W12		W10 X 45	W10			W10 X 45	W10 X 45	W10	W12	W12		W10	W10 X 45	W10 X 45	W10	W10
NINTH FLOOR	49	49		49	49		87	87	87	87	49		87	87		49	49			49	49	49	87	87		49	49	49	49	49
EL. +102.88'			49			49						49			49			49	49						49					
EIGHTH FLOOR	X	X	X	X	X	X	X	X	X	X	X	X	X	X	X	X	X	X	X	X	X	X	X	X	X	X	X	X	X	X
EL. +92.54' (TYP. SPUCE LINE 4'-0")	W10	W10	W10	W10	W10	W10	W12	W12	W12	W12	W10	W10	W12	W12	W10	W10	W10	W10	W10	W10	W10	W10	W12	W12	W10	W10	W10	W10	W10	W10
SEVENTH FLOOR	54	54	54	54	54	54	96	96	96	96	54	54	96	96	54	54	54	54	54	54	54	54	96	96	54	54	54	54	54	54
EL. +82.21'																														
SIXTH FLOOR	X	X	X	X	X	X	X	X	X	X	X	X	X	X	X	X	X	X	X	X	X	X	X	X	X	X	X	X	X	X
EL. +71.88' (TYP. SPUCE LINE 4'-0")	W10	W10	W10	W10	W10	W10	W12	W12	W12	W12	W10	W10	W12	W12	W10	W10	W10	W10	W10	W10	W10	W10	W12	W12	W10	W10	W10	W10	W10	W10
FIFTH FLOOR	60	60	60	60	60	60	106	106	106	106	60	60	106	106	60	60	60	60	60	60	60	60	106	106	60	60	60	60	60	60
EL. +61.54'																														
FOURTH FLOOR	X	X	X	X	X	X	X	X	X	X	X	X	X	X	X	X	X	X	X	X	X	X	X	X	X	X	X	X	X	X
EL. +51.21' (TYP. SPUCE LINE 4'-0")	W10	W10	W10	W10	W10	W10	W12	W12	W12	W12	W10	W10	W12	W12	W10	W10	W10	W10	W10	W10	W10	W10	W12	W12	W10	W10	W10	W10	W10	W10
THIRD FLOOR	68	68	68	68	68	68	120	120	120	120	68	68	120	120	68	68	68	68	68	68	68	68	120	120	68	68	68	68	68	68
EL. +40.88'																														
SECOND FLOOR																														
EL. +30.54'	X	X	X	X	X	X	X	X	X	X	X	X	X	X	X	X	X	X	X	X	X	X	X	X	X	X	X	X	X	X
FIRST FLOOR																														
EL. +16.54'	W10	W10	W10	W10	W10	W10	W12	W12	W12	W12	W10	W10	W12	W12	W10	W10	W10	W10	W10	W10	W10	W10	W12	W12	W10	W10	W10	W10	W10	W10
CELLAR																														
EL. +5.67' (11")	FTG.	FTG.	FTG.	FTG.	FTG.	FTG.	FTG.	FTG.	FTG.	FTG.	FTG.	FTG.	FTG.	FTG.	FTG.	FTG.	FTG.	FTG.	FTG.	FTG.	FTG.	FTG.	FTG.	FTG.	FTG.	FTG.	FTG.	FTG.	FTG.	FTG.
BASE PLATE (IN.) B X L X t	22 X 22 X ½	22 X 22 X ½	22 X 22 X ½	22 X 22 X ½	22 X 22 X ½	22 X 22 X ½	22 X 22 X ½	22 X 22 X ½	22 X 22 X ½	22 X 22 X ½	22 X 22 X ½	22 X 22 X ½	22 X 22 X ½	22 X 22 X ½	22 X 22 X ½	22 X 22 X ½	22 X 22 X ½	22 X 22 X ½	22 X 22 X ½	22 X 22 X ½	22 X 22 X ½	22 X 22 X ½	22 X 22 X ½	22 X 22 X ½	22 X 22 X ½	22 X 22 X ½	22 X 22 X ½	22 X 22 X ½	22 X 22 X ½	22 X 22 X ½

NOTES:
1. BOTTOM HEAVY LINE REPRESENTS BOTTOM OF BASE PLATE.
2. ALL LOADS SHOWN ARE GRAVITY AXIAL LOADS (DL+LL) IN KIPS.

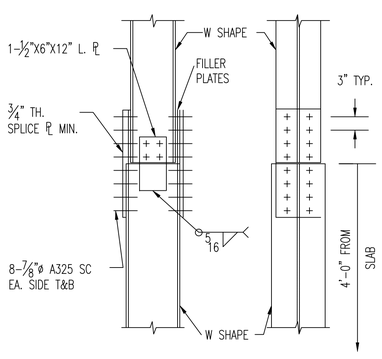

COLUMN SPLICE DETAIL
SCALE: 3/4"=1'-0"

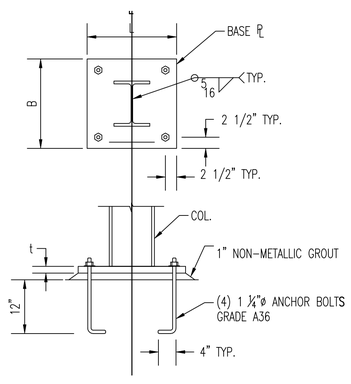

TYPICAL BASE PLATE DETAIL
SCALE: 3/4"=1'-0"

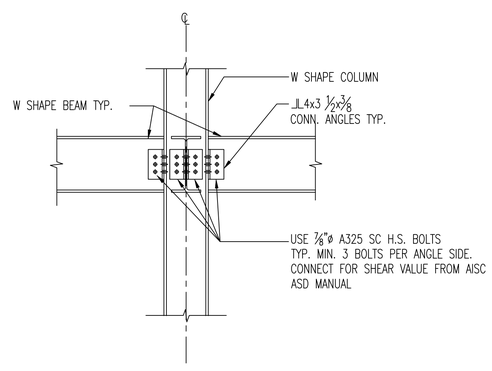

TYPICAL SHEAR CONNECTION DETAIL
SCALE: N.T.S.

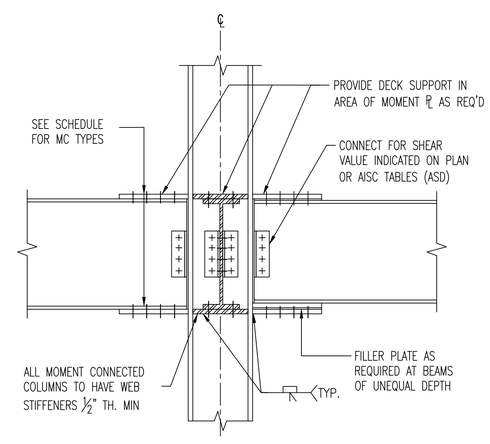

TYPICAL MOMENT CONNECTION DETAIL
SCALE: N.T.S.

MOMENT CONNECTION SCHEDULE

MC4:
8" WIDE X 3/4" TH.
2 ROWS @ 3" O.C.
7/8"ø A490-SC BOLTS

MC6:
8" WIDE X 3/4" TH.
3 ROWS @ 3" O.C.
7/8"ø A490-SC BOLTS

MC8:
8" WIDE X 3/4" TH.
4 ROWS @ 3" O.C.
7/8"ø A490-SC BOLTS

MC10:
10" WIDE X 3/4" TH.
5 ROWS @ 3" O.C.
7/8"ø A490-SC BOLTS

MC12:
10" WIDE X 1" TH.
6 ROWS @ 3" O.C.
1"ø A490-SC BOLTS

MC16:
12" WIDE X 1" TH.
8 ROWS @ 3" O.C.
1"ø A490-SC BOLTS

REVISIONS

NO.	DESCRIPTIONS	DATE

NO.	TO WHOM ISSUED	DATE
1	DOB	-

ISSUES

Tahoe Development Group LLC — Owner
8217 153rd Avenue — Anthony Gurino
Howard Beach, NY 11414 — 718 835 4700

Michael Muroff Architect, LLC — Architect
333 Hudson Street, Suite 501 — Michael Muroff
New York, NY 10013 — 646 230 7111

Structural Engineering Systems, PLLC — Structural Engineer
214-41 42nd Avenue, Suite 2B — Joseph Gulino
Bayside, NY 11361 — 718 224 7161

S. Schwartz Engineering, PLLC — MEP Engineer
15 West 39th Street, Suite PH — Simon Schwartz
New York, NY 10018 — 212 695 3509

THIS DRAWING IS AN INSTRUMENT OF SERVICE AND SHALL REMAIN THE PROPERTY OF MICHAEL MUROFF ARCHITECT,L.L.C., WHETHER THE PROJECT FOR WHICH IT IS MADE IS EXECUTED OR NOT. THE REPRODUCTION, ALTERATION OR REPRODUCTION OF THIS DRAWING, SUCH AS BUT NOT LIMITED TO THE ADDITION OF ANY NEW INFORMATION, BUILDING LOCATIONS, ELEVATIONS, ETC. SHALL BE FORBIDDEN WITHOUT THE WRITTEN CONSENT OF MICHAEL MUROFF ARCHITECT,L.L.C. FOUNDATION OR DISTRIBUTION TO MEET OFFICIAL REGULATORY REQUIREMENTS OR FOR OTHER PURPOSES IN CONNECTION WITH THIS PROJECT IS NOT TO BE CONSTRUED AS PUBLICATION IN DEROGATION OF THE RIGHTS OF MICHAEL MUROFF ARCHITECT,L.L.C. REPRODUCTION OR PUBLICATION BY ANY METHOD IN WHOLE OR IN PART IS PROHIBITED. TITLE TO THIS DRAWING BELONGS TO MICHAEL MUROFF ARCHITECT,L.L.C. WITHOUT PREJUDICE.

THE FIRM OF MICHAEL MUROFF ARCHITECT,L.L.C. HAS NOT BEEN RETAINED TO DO FIELD SUPERVISION OR INSPECTION. THE FIRM OF MICHAEL MUROFF ARCHITECT,L.L.C., IT'S PRINCIPLES, EMPLOYEES, AND CONSULTANTS HAVE NOT BEEN RETAINED TO PROVIDE ANY SERVICES RELATED TO ASBESTOS, TOXIC WASTE, OR HAZARDOUS MATERIALS. THEIR REMOVAL, ABATEMENTS, OR ENCAPSULATING. MICHAEL MUROFF ARCHITECT,L.L.C. IS NOT RESPONSIBLE FOR ANY ASBESTOS, TOXIC WASTE, OR HAZARDOUS MATERIALS ENCOUNTERED DURING CONSTRUCTION. MICHAEL MUROFF ARCHITECT,L.L.C. ASSUMES NO RESPONSIBILITY FOR ASBESTOS HEALTH HAZARDS OR EXPOSURE, CORRECTIVE ACTION PROGRAMS, OR ASBESTOS CONTAINMENT OR REMOVAL PROGRAMS. THE OWNER OF THIS BUILDING HAS RETAINED AN INDEPENDENT ASBESTOS CONSULTANT. ALL INQUIRIES SHOULD BE DIRECTED TO THE OWNER OF NO ASBESTOS WAS EVER USED IN A MANNER OR IN A MATERIAL THAT COULD CAUSE ANY ASBESTOS HAZARD. ALTER THIS DRAWING IN ANY WAY UNLESS ACTING UNDER THE DIRECTION OF A REGISTERED ARCHITECT OR LICENSED PROFESSIONAL ENGINEER. ALTERATIONS SHALL BE BLUE AND THE NOTATION "ALTERED BY" FOLLOWED BY HIS SIGNATURE AND DATE OF ALTERATION AND A SPECIFIC DESCRIPTION OF THE ALTERATION.

Michael Muroff Architect, LLC
333 Hudson Street
Suite 501
New York, NY 10013
Tel: 646. 230. 7113
Fax: 646. 230. 7277
NY Licence #015011

221-227
EAST 138th STREET

NYC DOB BIN: 2000973, 2000974
Block: 2340 Lots: 56, 58

STEEL SECTIONS AND DETAILS I

STATE OF NEW YORK · JOSEPH ANTHONY GULINO · 070916 · LICENSED PROFESSIONAL ENGINEER

Date: 1-14-15
Scale: As Noted
Project No.: 14-165
Drawing By: EGK
Checked By: JAG

S-012.00

SHEET # 16 OF 27

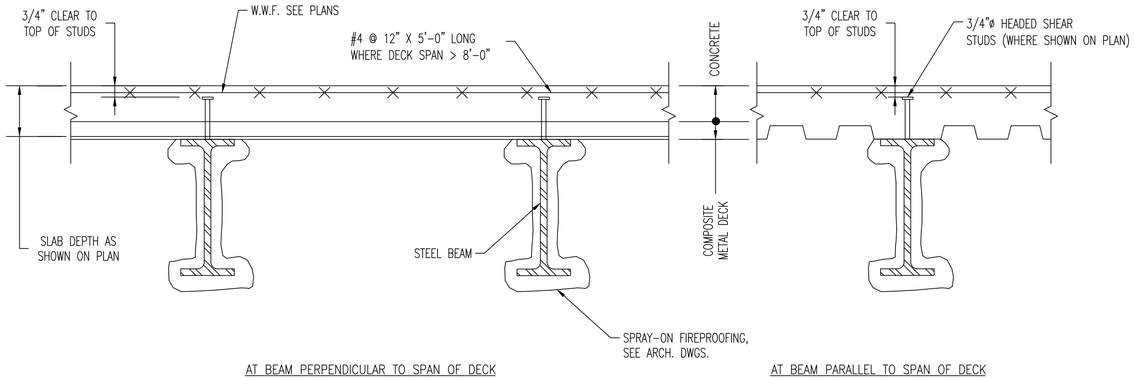

TYPICAL DETAIL COMPOSITE SLAB AND BEAM CONSTRUCTION

SCALE: N.T.S.

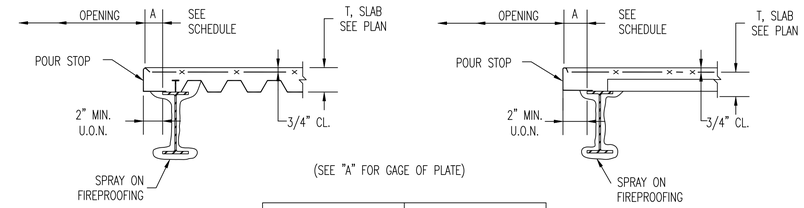

T=4 TO 8"		T=8"	
A	GAUGE OF PLATE	A	GAUGE OF PLATE
UP TO 4"	14	3" TO 8"	12
4" TO 8"	12	4" TO 7"	10
8" TO 10"	10		

TYPICAL DETAILS OF BEAMS AT OPENING

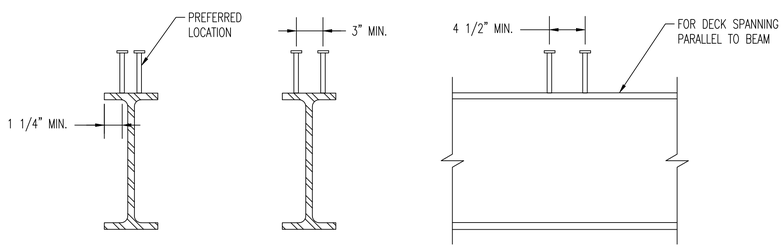

TYPICAL SHEAR STUD ARRANGEMENT DETAIL

SCALE: N.T.S.

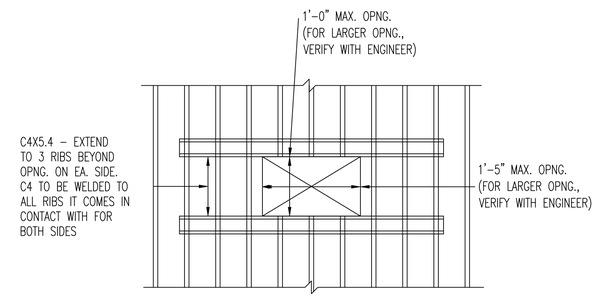

NO REINFORCENT REQUIRED FOR HOLES 6"ø OR LESS.
PROVIDE CONCRETE STOP AT ALL OPENINGS.

FOR OPENINGS TO 1'-5" PERPENDICULAR TO DECK

1. WHERE A SINGLE NUMBER IS INDICATED (#) IN PLAN THE NUMBER OF SHEAR STUD CONNECTORS SHALL BE DISTRIBUTED UNIFORMLY ALONG THE LENGTH OF THE BEAM, UNLESS OTHERWISE NOTED.
2. STUDS SHALL BE PLACED IN A SINGLE ROW OVER WEB WHERE POSSIBLE.
3. WHERE THE NUMBER OF STUDS EXCEEDS THE MAXIMUM THAT CAN BE PLACED IN A SINGLE ROW, PLACE AS MANY STUDS AS POSSIBLE IN A SINGLE ROW (BASED ON MINIMUM SPACING) AND ADD REMAINDER AT ENDS OF SPAN IN MULTIPLE ROWS.
4. WHERE A SERIES OF NUMBERS IS INDICATED (#,#,#) FOR BEAM OR GIRDERS SUPPORTING OTHER BEAMS THE SHEAR CONNECTORS SHALL BE DISTRIBUTED AS IN THE FOLLOWING EXAMPLES:

NO REINFORCENT REQUIRED WHERE "L" IS 6" OR LESS IN DIRECTION PERPENDICULAR TO DECK.

FOR OPENINGS TO 10" PERPENDICULAR TO DECK

TYPICAL DETAILS OF BEAMS AT OPENING

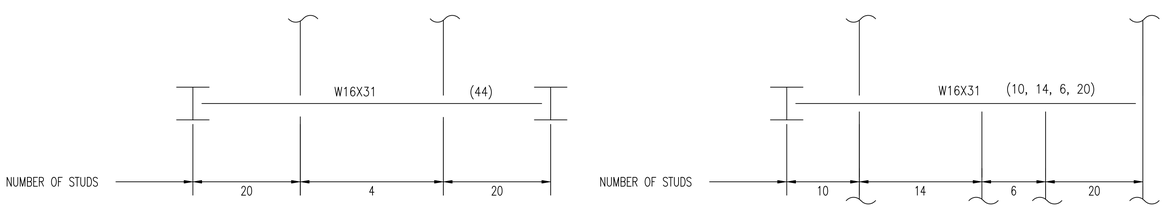

TYPICAL DETAIL COMPOSITE BEAMS STUD SHEAR CONNECTORS

SCALE: N.T.S.

REVISIONS		
NO.	DESCRIPTIONS	DATE
1	DOB	-

NO.	TO WHOM ISSUED	DATE
	ISSUES	

Tahoe Development Group LLC
8217 153rd Avenue
Howard Beach, NY 11414
Owner
Anthony Gurino
718 835 4700

Michael Muroff Architect, LLC
333 Hudson Street, Suite 501
New York, NY 10013
Architect
Michael Muroff
646 230 7111

Structural Engineering Systems, PLLC
214-41 42nd Avenue, Suite 2B
Bayside, NY 11361
Structural Engineer
Joseph Gulino
718 224 7161

S. Schwartz Engineering, PLLC
15 West 39th Street, Suite PH
New York, NY 10018
MEP Engineer
Simon Schwartz
212 695 3509

THIS DRAWING IS AN INSTRUMENT OF SERVICE AND SHALL REMAIN THE PROPERTY OF MICHAEL MUROFF ARCHITECT,L.L.C. WHETHER THE PROJECT FOR WHICH IT IS MADE IS EXECUTED OR NOT. THIS DRAWING SHALL NOT BE USED BY THE OWNER OR OTHERS ON OTHER PROJECTS, FOR ADDITIONS TO THIS PROJECT, OR FOR COMPLETION OF THIS PROJECT BY OTHERS, EXCEPT BY AGREEMENT IN WRITING WITH MICHAEL MUROFF ARCHITECT,L.L.C. SUBMISSION OR DISTRIBUTION TO MEET OFFICIAL REGULATORY REQUIREMENTS OR FOR OTHER PURPOSES IN CONNECTION WITH THE PROJECT IS NOT TO BE CONSTRUED AS PUBLICATION IN DEROGATION OF THE RIGHTS OF MICHAEL MUROFF ARCHITECT,L.L.C. OR MICHAEL MUROFF ARCHITECT,L.L.C. OR PROVIDE FOR ANY METHOD IN WHOLE OR IN PART IS PROHIBITED. TITLE TO THIS DRAWING BELONGS TO MICHAEL MUROFF ARCHITECT,L.L.C. WITHOUT PREJUDICE.

THE FIRM OF MICHAEL MUROFF ARCHITECT,L.L.C. HAS NOT BEEN RETAINED TO DO FIELD SUPERVISION OR INSPECTION. THE FIRM OF MICHAEL MUROFF ARCHITECT,L.L.C. IT'S PRINCIPLES, EMPLOYEES, AND CONSULTANTS HAVE NOT BEEN RETAINED TO PROVIDE ANY SERVICES RELATED TO ASBESTOS IN ANY FORM, ASBESTOS EXPOSURE ASSESSMENTS, APPROACH, ASBESTOS HEALTH HAZARDS ON EXPOSURE, CORRECTIVE ACTION PROGRAMS, OR ASBESTOS CONTAINMENT OR REMOVAL PROGRAMS. THE OWNER OF THIS BUILDING HAS RETAINED AN INDEPENDENT ASBESTOS CONSULTANT. ALL REQUIRED SHOULD BE DIRECTED TO THE OWNER OR HIS ASBESTOS CONSULTANT. IF A VIOLATION OF THE ABOVE STATEMENT HAS BEEN DISCOVERED, THE ARCHITECT HAS EXAMINED IN ACCORDANCE WITH THE CONDITIONS UNDER THE SEAL OF A REGISTERED ARCHITECT, THE ARCHITECT SHALL AFFIX HIS SEAL AND THE WORDS "ALTERED BY" FOLLOWED BY HIS SIGNATURE AND DATE OF ALTERATION AND A SPECIFIC DESCRIPTION OF THE ALTERATION.

Michael Muroff Architect, LLC
333 Hudson Street
Suite 501
New York, NY 10013
Tel: 646. 230. 7111
Fax: 646. 230. 7277
NY Licence #015011

221-227
EAST 138th STREET

NYC DOB BIN: 2000973, 2000974
Block: 2340 Lots: 56, 58

STEEL SECTIONS AND DETAIL II

STATE OF NEW YORK · JOSEPH ANTHONY GULINO · 070916 · LICENSED PROFESSIONAL ENGINEER

Date: 1-14-15
Scale: As Noted
Project No. : 14-165
Drawing By: EGK
Checked By: JAG

S-013.00

SHEET # 17 OF 27

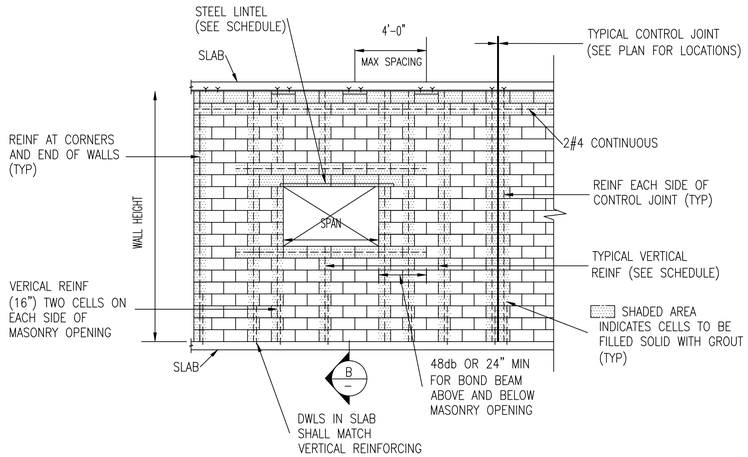

NOTES:

1. SIZE OF VERTICAL REINF TO MATCH SIZE OF TYPICAL VERTICAL REINFORCING (SEE SCHEDULE FOR SIZE).
2. PROVIDE TENSION SPLICES FOR VERTICAL REINF.

TYPICAL INTERIOR MASONRY WALL SCHEDULE U.O.N.		
HEIGHT \ THICKNESS	REINFORCEMENT	8"
UP TO 12'-0"	VERTICAL	#4 @ 24"
	HORIZONTAL	(2) #9 GAUGE LONGITUDINAL WIRES AND 9 GAUGE CROSS WIRES @ 16" O.C.
12'-0" TO 16'-0"	VERTICAL	#4 @ 8"
	HORIZONTAL	(2) #9 GAUGE LONGITUDINAL WIRES AND 9 GAUGE CROSS WIRES @ 16" O.C.

NOTES:
1. DOWELS TO MATCH VERTICAL REINFORCEMENT (TYP.)

STEEL LINTEL SCHEDULE U.O.N	
MAXIMUM MASONRY OPENING	WALL THICKNESS
	8" WALLS
3'-0"	2- ⊥L3 1/2 x 3 1/2 x 3/8
4'-0"	2- ⊥L4 x 3 1/2 x 3/8
5'-0"	2- ⊥L5 x 3 1/2 x 3/8
6'-0"	2- ⊥L5 x 3 1/2 x 3/8
8'-0"	2- ⊥L6 x 3 1/2 x 3/8

NOTES:
1. PROVIDE AND INSTALL LINTEL ANGLES FOR MASONRY OPENINGS IN ACCORDANCE WITH THE SCHEDULE ABOVE. INSTALL LONG LEG VERTICAL.
2. PROVIDE 8" MINIMUM BEARING AT EACH END BUT NOT LESS THAN 1" PER FOOT OF SPAN.
3. WHERE MINIMUM BEARING CAN NOT BE PROVIDED, ATTACH SECURELY TO ADJACENT STRUCTURAL MEMBERS OR PROVIDE SEPARATE SUPPORTS.
4. WHERE LINTELS OCCUR IN EXTERIOR WALLS, ANGLES SHALL BE HOT-DIPPED GALVANIZED.

1 TYPICAL INTERIOR MASONRY WALL ELEVATION
SCALE: N.T.S.

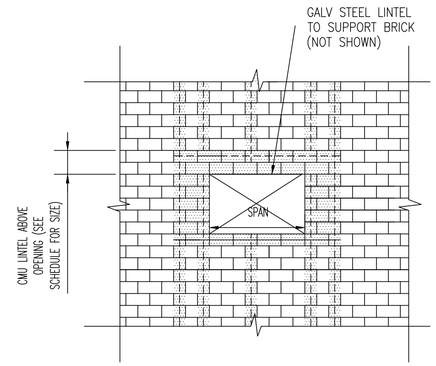

NOTE:
1. FOR BALANCE OF INFORMATION, SEE DETAIL 1 THIS DWG.

TYPICAL EXTERIOR MASONRY BACKUP WALL SCHEDULE U.O.N.		
HEIGHT \ THICKNESS	REINFORCEMENT	8"	12"
UP TO 12'-0"	VERTICAL	#5 @ 24"	#5 @ 16"
	HORIZONTAL	(2) #9 GAUGE LONGITUDINAL WIRES & 9 GAUGE CROSS WIRES @ 16" O.C.	(2) #9 GAUGE LONGITUDINAL WIRES & 9 GAUGE CROSS WIRES @ 16" O.C.
12'-0" TO 16'-0"	VERTICAL	#5 @ 16"	#5 @ 8"
	HORIZONTAL	(2) #9 GAUGE LONGITUDINAL WIRES & 9 GAUGE CROSS WIRES @ 16" O.C.	(2) #9 GAUGE LONGITUDINAL WIRES & 9 GAUGE CROSS WIRES @ 16" O.C.

NOTE:
1. DOWELS TO MATCH VERTICAL REINFORCEMENT (TYP.)

CMU LINTEL SCHEDULE (8" CMU FACADE BACKUP WALL)		
MAXIMUM MASONRY OPENING	LINTEL DEPTH	TOP & BOTTOM REINF.
UP TO 4'-0"	8"	(2) #4
4'-0" TO 6'-0"	16"	(2) #5
6'-6" TO 9'-0"	24"	(2) #5

CMU LINTEL SCHEDULE (12" CMU FACADE BACKUP WALL)		
MAXIMUM MASONRY OPENING	LINTEL DEPTH	TOP & BOTTOM REINF.
UP TO 4'-0"	8"	(2) #5
4'-0" TO 6'-0"	16"	(3) #5
6'-6" TO 9'-0"	24"	(3) #5

NOTE:
1. BACK LINTEL TO BE L4x3 1/2x3/8 (GALV) ANCHORED TO CMU LINTEL AT 2'-6" O.C. MAX. (TYP).
2. CMU LINTELS SHALL BE FILLED SOLID WITH GROUT AS SHOWN ON THE TYPICAL CMU WALL ELEVATION.
3. EXTERIOR BRICK LINTELS SHALL BE HOT-DIPPED GALVANIZED.

2 TYPICAL EXTERIOR WALL MASONRY OPENING
SCALE: N.T.S.

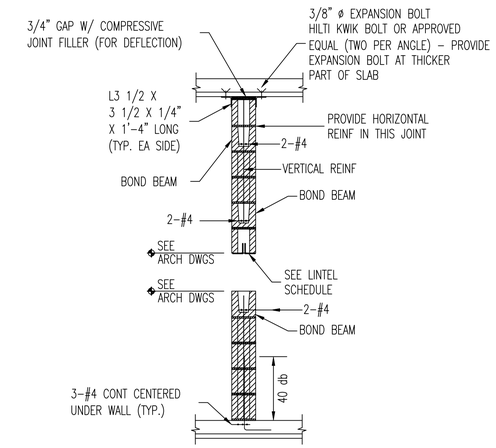

B TYPICAL INTERIOR MASONRY WALL SECTION
SCALE: N.T.S.

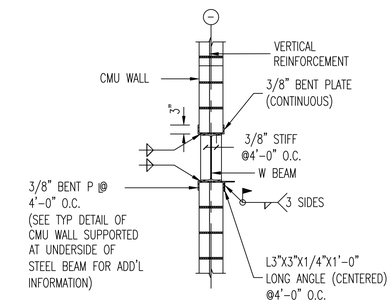

A TYP. DETAIL OF INTERIOR CMU WALL ON STEEL BEAM
SCALE: N.T.S.

NOTES:

1. ALL EXTERIOR WALLS ARE DESIGNED TO SPAN VERTICALLY. SEE WALL ELEVATION AND SCHEDULE FOR REINFORCEMENT.
2. UNLESS OTHERWISE NOTED, HORIZONTAL REINFORCEMENT SHALL BE DUR-O-WAL TRUSS OR LADUR TYPE REINFORCEMNT, OR APPROVED EQUAL, WITH (2) #9 GAUGE WIRES, AT EVERY OTHER COURSE.
3. ALL CMU BLOCKS SHALL BE TWO (2)-CELL UNITS WITH A PRISM STRENGTH, f'm=1,800 PSI.
4. SEE ARCHITECTURAL DRAWINGS FOR LOCATION AND CONFIGURATION OF EXTERIOR MASONRY WALLS. THE PRESENCE OF FOLDS AND TURNS IN THE PLAN CONFIGURATION OF THE MASONRY WALL DOES NOT CHANGE THE REINFORCEMENTS OF THIS TYPICAL DETAIL.
5. WHERE SPLICES ARE REQUIRED, REBARS SHALL BE LAPPED A MINIMUM OF 48Xdb OR 24 INCHES, WHICHEVER IS LARGER WHERE db IS THE DIAMETER OF THE REINFORCING BAR.
6. MORTAR SHALL CONFORM TO ASTM C270 TYPE S.
7. THE MAXIMUM WALL OPENING AS SHOWN SHALL BE 8'-0" CLEAR FOR ALL STEEL LOOSE LINTELS. OPENINGS GREATER THAN 8'-0" SHALL REQUIRE A PRE-CAST CONCRETE OR CMU BOND BEAM LINTEL.
8. ALL STEEL LOOSE LINTELS ABOVE 4'-0" SHALL BE FIREPROOFED AS PER NEW YORK CITY BUILDING CODE. NO LOOSE LINTELS ARE TO BE HUNG FROM STRUCTURAL STEEL ABOVE.

REVISIONS		
NO.	DESCRIPTIONS	DATE
1	DOB	-

NO.	TO WHOM ISSUED	DATE
ISSUES		

Tahoe Development Group LLC — Owner
8217 153rd Avenue — Anthony Gurino
Howard Beach, NY 11414 — 718 835 4700

Michael Muroff Architect, LLC — Architect
333 Hudson Street, Suite 501 — Michael Muroff
New York, NY 10013 — 646 230 7111

Structural Engineering Systems, PLLC — Structural Engineer
214-41 42nd Avenue, Suite 2B — Joseph Gulino
Bayside, NY 11361 — 718 224 7161

S. Schwartz Engineering, PLLC — MEP Engineer
15 West 39th Street, Suite PH — Simon Schwartz
New York, NY 10018 — 212 695 3509

THIS DRAWING IS AN INSTRUMENT OF SERVICE AND SHALL REMAIN THE PROPERTY OF MICHAEL MUROFF ARCHITECT,LLC. WHETHER THE PROJECT FOR WHICH IT IS MADE IS EXECUTED OR NOT. THE REPRODUCTION, ALTERATION OR REPUBLICATION OF THIS DRAWING IS PROHIBITED EXCEPT FOR AUTHORS USE IN THE PROJECT FOR WHICH IT WAS PREPARED OR FOR COMPLETION OF THAT PROJECT BY OTHERS EXCEPT BY AGREEMENT IN WRITING WITH MICHAEL MUROFF ARCHITECT,LLC. SUBMISSION OR DISTRIBUTION TO MEET OFFICIAL REGULATORY REQUIREMENTS OR FOR OTHER PURPOSES IN CONNECTION WITH THE PROJECT IS NOT TO BE CONSTRUED AS PUBLICATION IN DEROGATION OF THE RIGHTS OF MICHAEL MUROFF ARCHITECT,LLC. REPRODUCTION OR PUBLICATION BY ANY METHOD IN WHOLE OR IN PART IS PROHIBITED. TITLE TO THIS DRAWING BELONGS TO MICHAEL MUROFF ARCHITECT,LLC. WITHOUT PREJUDICE.

THE FIRM OF MICHAEL MUROFF ARCHITECT,LLC. HAS NOT BEEN RETAINED TO DO FIELD SUPERVISION OR INSPECTION. THE FIRM OF MICHAEL MUROFF ARCHITECT,LLC. ITS PRINCIPLES, EMPLOYEES, AND CONSULTANTS HAVE NOT BEEN RETAINED TO DIAGNOSE, SPECIFY, MONITOR OR ESTIMATE FOR ASBESTOS OR HAZARDOUS MATERIAL IN THE PROJECT. THE ARCHITECT AND HIS CONSULTANTS ASSUME NO RESPONSIBILITY FOR ASBESTOS OR HAZARDOUS MATERIAL AND DO NOT SPECIFY OR MAKE RECOMMENDATIONS RELATED TO ASBESTOS IN ANY FORM. ASBESTOS EXPOSURE ASSESSMENTS, APPRAISALS, ASBESTOS HEALTH HAZARDS OR EXPOSURE, CORRECTIVE ACTION PROGRAMS, OR ASBESTOS CONTAINMENT OR REMOVAL PROGRAMS. THE OWNER OF THIS BUILDING HAS RETAINED AN INDEPENDENT ASBESTOS CONSULTANT. ALL INQUIRIES SHOULD BE DIRECTED TO THE OWNER OR HIS ASBESTOS CONSULTANT. NO ALTERATIONS TO THE ORIGINAL DRAWING ARE PERMITTED WITHOUT THE WRITTEN CONSENT OF MICHAEL MUROFF ARCHITECT,LLC. UNLESS ACTING UNDER THE DIRECTION OF A REGISTERED ARCHITECT, THE ALTERING ARCHITECT SHALL AFFIX HIS SEAL AND THE NOTATION "ALTERED BY" FOLLOWED BY HIS SIGNATURE AND DATE OF ALTERATION AND A SPECIFIC DESCRIPTION OF THE ALTERATION.

Michael Muroff Architect, LLC
333 Hudson Street
Suite 501
New York, NY 10013
Tel: 646. 230. 7111
Fax: 646. 230. 7277
NY Licence #015011

221-227
EAST 138th STREET

MASONRY WALL DETAILS I

STATE OF NEW YORK · JOSEPH ANTHONY GULINO · 070916 · LICENSED PROFESSIONAL ENGINEER

Date: 1-14-15
Scale: As Noted
Project No.: 14-165
Drawing By: EGK
Checked By: JAG

S-014.00

SHEET # 18 OF 27

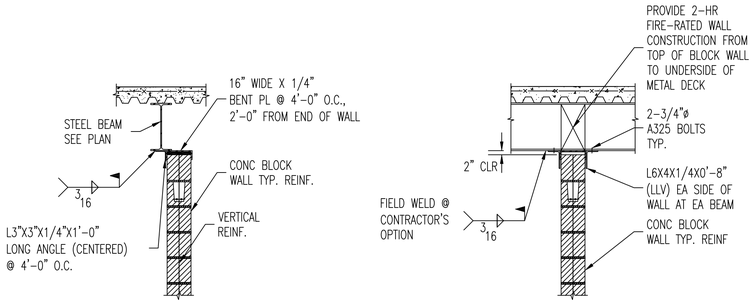

A — TYPICAL DETAILS OF INTERIOR CMU WALL SUPPORTED AT UNDERSIDE OF STEEL BEAM
SCALE: N.T.S.

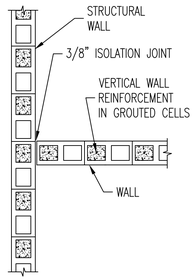

GROUT MIX						
STRENGTH	CEMENT	WT (BAG)	SAND WT (LB)	WATER (GALLON)	SLUMP (INCH)	SPREAD (INCH)
4000 psi	Lehigh	94lb (1 BAG)	188 LB	6.8 GALLON	11.0"	23.0"
5000 psi	Lehigh	94lb (1 BAG)	188 LB	6.0 GALLON	10.0"	22.0"

VOLUMEMTRIC MORTAR MIX: (Per IBC Table 2103.8(1) & ASTM C270 Table-1			
MORTAR	CEMENT	WT (BAG)	DAMP SAND (BAG)
S	Type S	94lb (1 BAG)	2.25 to 3.0 Bag
M	Type M	94lb (1 BAG)	2.25 to 3.0 Bag
N	Type N	94lb (1 BAG)	2.25 to 3.0 Bag

E — TYPICAL ISOLATION JOINT
SCALE: N.T.S.

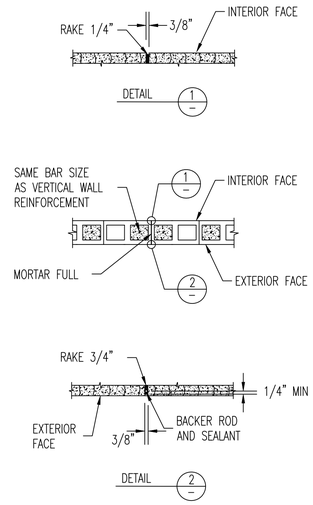

B — TYPICAL CMU CONTROL JOINT DETAILS
SCALE: N.T.S.

NOTES:

SEE AND USE MASONRY NOTES SHOWN ON DRAWING S-008 AND S-000.

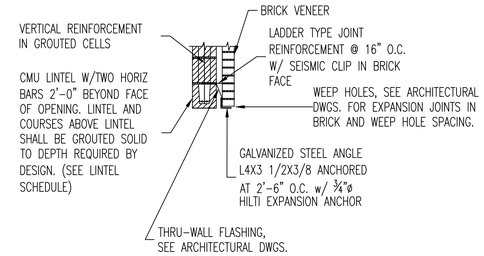

C — LINTEL SECTION FOR ANCHORED BRICK
SCALE: N.T.S.

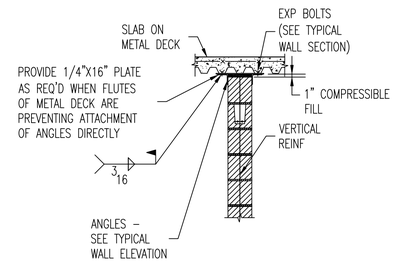

D — TYPICAL DETAIL OF CMU WALL LATERALLY SUPPORTED AT METAL DECK

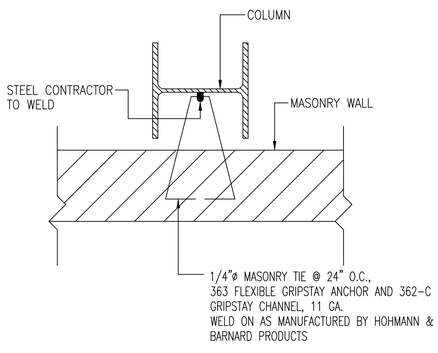

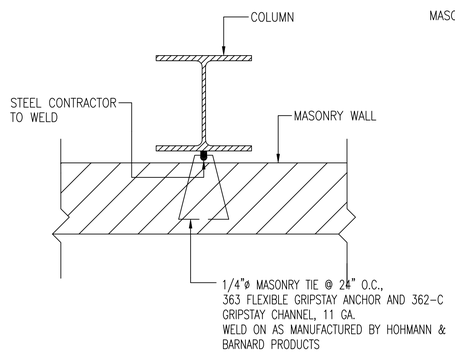

NOTES: 1. STEEL CONTRACTOR TO PROVIDE MASONRY TIES AT ALL STEEL COLUMNS ADJACENT TO THE MASONRY WALLS, SEE ARCHT'L. PLANS FOR FURTHER DETAILS.

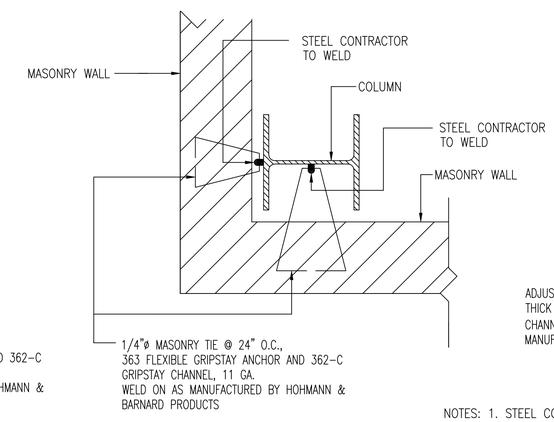

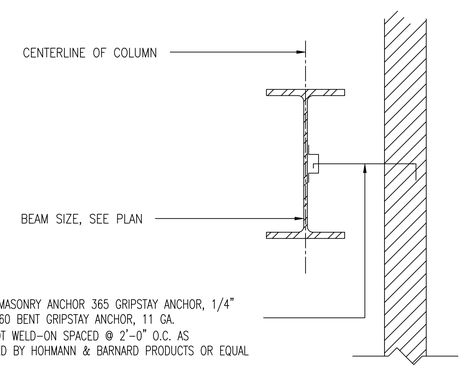

NOTES: 1. STEEL CONTRACTOR TO PROVIDE MASONRY TIES AT ALL SPANDREL BEAMS ADJACENT TO THE EXTERIOR MASONRY WALLS, SEE ARCHT'L. PLANS FOR FURTHER DETAILS.

TYPICAL ANCHOR DETAILS

REVISIONS		
NO.	DESCRIPTIONS	DATE
1	DOB	-
NO.	TO WHOM ISSUED	DATE
	ISSUES	

Tahoe Development Group LLC
8217 153rd Avenue
Howard Beach, NY 11414
Owner
Anthony Gurino
718 835 4700

Michael Muroff Architect, LLC
333 Hudson Street, Suite 501
New York, NY 10013
Architect
Michael Muroff
646 230 7111

Structural Engineering Systems, PLLC
214-41 42nd Avenue, Suite 2B
Bayside, NY 11361
Structural Engineer
Joseph Gulino
718 224 7161

S. Schwartz Engineering, PLLC
15 West 39th Street, Suite PH
New York, NY 10018
MEP Engineer
Simon Schwartz
212 695 3509

THIS DRAWING IS AN INSTRUMENT OF SERVICE AND SHALL REMAIN THE PROPERTY OF MICHAEL MUROFF ARCHITECT,LLC. WHETHER THE PROJECT FOR WHICH IT IS MADE IS EXECUTED OR NOT. THIS DRAWING SHALL NOT BE USED BY THE OWNER OR OTHERS ON OTHER PROJECTS FOR ADDITIONS TO THIS PROJECT OR FOR COMPLETION OF THIS PROJECT BY OTHERS EXCEPT BY AGREEMENT IN WRITING WITH MICHAEL MUROFF ARCHITECT,LLC. SUBMISSION OR DISTRIBUTION TO MEET OFFICIAL REGULATORY REQUIREMENTS OR FOR OTHER PURPOSES IN CONNECTION WITH THE PROJECT IS NOT TO BE CONSTRUED AS PUBLICATION IN DEROGATION OF THE RIGHTS OF MICHAEL MUROFF ARCHITECT,LLC. MICHAEL MUROFF ARCHITECT,LLC. REPRODUCTION OR PUBLICATION BY ANY METHOD IN WHOLE OR IN PART IS PROHIBITED. TITLE TO THIS DRAWING BELONGS TO MICHAEL MUROFF ARCHITECT,LLC. WITHOUT PREJUDICE.

THE FIRM OF MICHAEL MUROFF ARCHITECT,LLC. HAS NOT BEEN RETAINED TO DO FIELD SUPERVISION OR INSPECTION. THE FIRM OF MICHAEL MUROFF ARCHITECT,LLC. IT'S PRINCIPLES, EMPLOYEES, AND CONSULTANTS HAVE NOT BEEN RETAINED TO PROVIDE ANY SERVICES RELATED TO ASBESTOS, TOXIC WASTE, OR HAZARDOUS MATERIALS. THEIR SEARCHES, ASSESSMENTS, OR ENCAPSULATIONS. MICHAEL MUROFF ARCHITECT,LLC. DO NOT SPECIFY, OR MAKE RECOMMENDATIONS RELATED TO ASBESTOS IN ANY FORM. ASBESTOS EXPOSURE ASSESSMENTS, APPRAISAL, SAMPLING, TESTING, ABATEMENT, OR ENCAPSULATION SHOULD BE DIRECTED TO THE OWNER OR MR. TONY GURINO, THE OWNER OF THIS BUILDING AND RETAINED AN INDEPENDENT ASBESTOS CONSULTANT. ALL INQUIRIES SHOULD BE DIRECTED TO THE OWNER OR MR. ASBESTOS CONSULTANT. IT IS A VIOLATION OF THE PROFESSIONAL LICENSE LAW FOR ANY PERSON TO ALTER THIS DRAWING IN ANY WAY UNLESS ACTING UNDER THE DIRECTION OF A REGISTERED ARCHITECT. THE ALTERING ARCHITECT SHALL AFFIX HIS SEAL AND THE NOTATION "ALTERED BY" FOLLOWED BY HIS SIGNATURE AND DATE OF ALTERATION AND A SPECIFIC DESCRIPTION OF THE ALTERATION.

Michael Muroff Architect, LLC
333 Hudson Street
Suite 501
New York, NY 10013
Tel: 646. 230. 7111
Fax: 646. 230. 7272
NY Licence #015017

221-227
EAST 138th STREET

NYC DOB BIN: 2000973, 2000974
Block: 2340 Lots: 56, 58

MASONRY WALL
DETAILS II

STATE OF NEW YORK
JOSEPH ANTHONY GULINO
070916
LICENSED PROFESSIONAL ENGINEER

Date: 1-14-15
Scale: As Noted
Project No.: 14-165
Drawing By: EGK
Checked By: JAG

S-015.00

SHEET # 19 OF 27

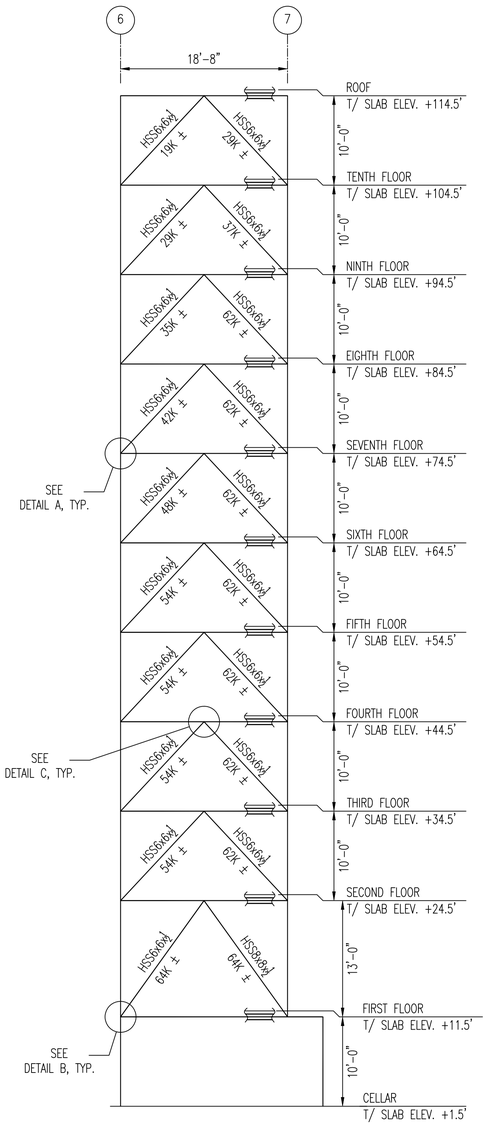

1 COLUMN LINE E
SCALE: 1/8"=1'-0"

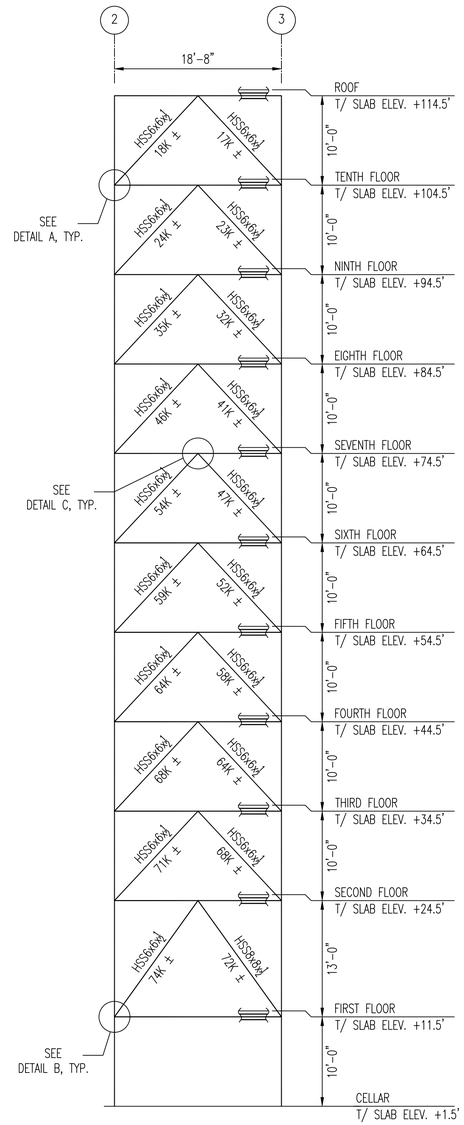

2 COLUMN LINE C
SCALE: 1/8"=1'-0"

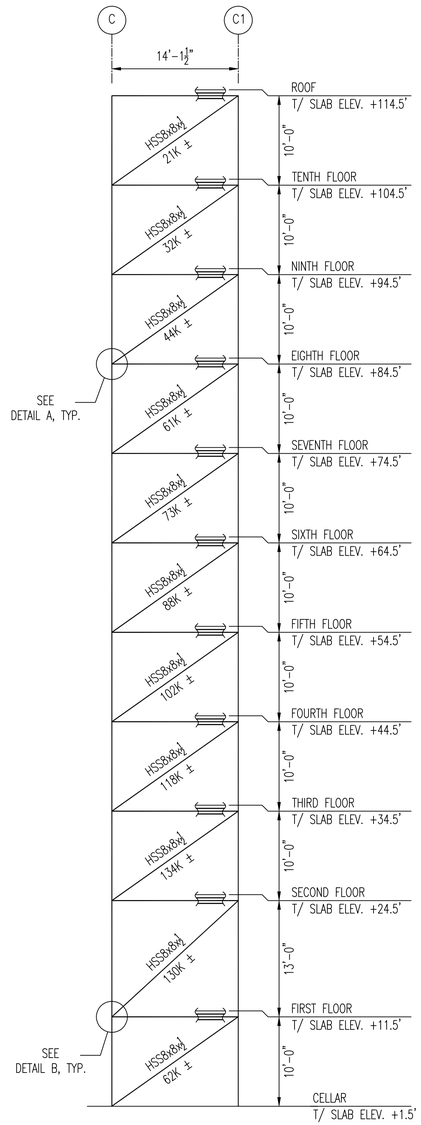

3 COLUMN LINE 4 & 5
SCALE: 1/8"=1'-0"

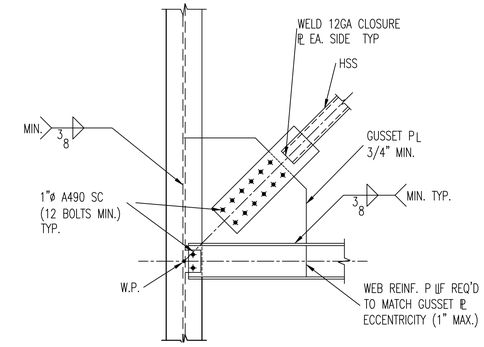

DETAIL A
SCALE: 3/4"=1'-0"

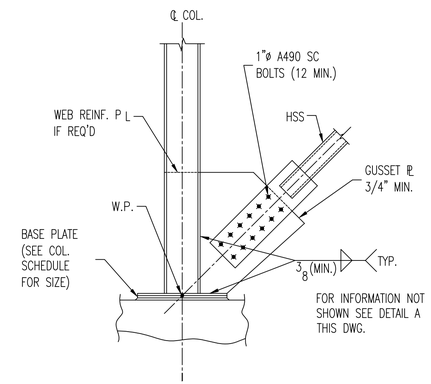

DETAIL B
SCALE: 3/4"=1'-0"

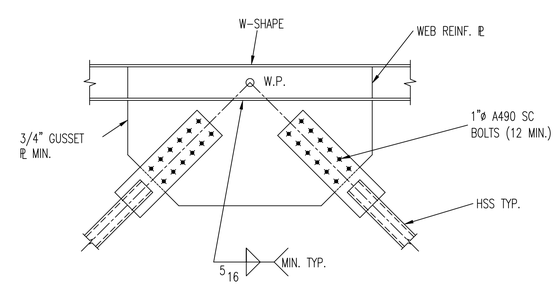

DETAIL C
SCALE: 3/4"=1'-0"

NOTES

1. ALL TUBE BRACING MEMBERS SHALL BE ASTM A500 GRADE B WITH AN F_y=46 KSI.
2. FOR COLUMN SIZES SEE COLUMN SCHEDULE.
3. FOR BEAM SIZES SEE FRAMING PLANS.
4. ALL BOLTS SHALL BE A490SC.
5. FORCES SHOWN (±.....) ARE AXIAL SERVICE LOADS (IN TENSION OR COMPRESSION) AND APPLIED AT BOTH ENDS OF MEMBER.
6. FOR BALANCE OF NOTES AND LEGEND, SEE DWG. S-000.

REVISIONS

NO.	DESCRIPTIONS	DATE

NO.	TO WHOM ISSUED	DATE
1	DOB	-

ISSUES

Tahoe Development Group LLC — Owner
8217 153rd Avenue — Anthony Gurino
Howard Beach, NY 11414 — 718 835 4700

Michael Muroff Architect, LLC — Architect
333 Hudson Street, Suite 501 — Michael Muroff
New York, NY 10013 — 646 230 7111

Structural Engineering Systems, PLLC — Structural Engineer
214-41 42nd Avenue, Suite 2B — Joseph Gulino
Bayside, NY 11361 — 718 224 7161

S. Schwartz Engineering, PLLC — MEP Engineer
15 West 39th Street, Suite PH — Simon Schwartz
New York, NY 10018 — 212 695 3509

THIS DRAWING IS AN INSTRUMENT OF SERVICE AND SHALL REMAIN THE PROPERTY OF MICHAEL MUROFF ARCHITECT,LLC. WHETHER THE PROJECT FOR WHICH IT IS MADE IS EXECUTED OR NOT. THE REPRODUCTION, ALTERATION OR USE OF THIS DRAWING WITHOUT PRIOR WRITTEN CONSENT FOR ADDITIONS TO THIS PROJECT OR FOR COMPLETION OF THIS PROJECT BY OTHERS EXCEPT BY AGREEMENT IN WRITING WITH MICHAEL MUROFF ARCHITECT,LLC. SUBMISSION OR DISTRIBUTION TO MEET OFFICIAL REGULATORY REQUIREMENTS OR FOR OTHER PURPOSES IN CONNECTION WITH THE PROJECT IS NOT TO BE CONSTRUED AS PUBLICATION IN DEROGATION OF THE RIGHTS OF MICHAEL MUROFF ARCHITECT,LLC. REPRODUCTION OR PUBLICATION BY ANY METHOD IN WHOLE OR IN PART IS PROHIBITED. TITLE TO THIS DRAWING BELONGS TO MICHAEL MUROFF ARCHITECT,LLC. WITHOUT PREJUDICE.

THE FIRM OF MICHAEL MUROFF ARCHITECT,LLC. HAS NOT BEEN RETAINED TO DO FIELD SUPERVISION OR INSPECTION. THE FIRM OF MICHAEL MUROFF ARCHITECT,LLC. HAS NOT BEEN RETAINED TO DO ANY SPECIFICATIONS OR RECOMMENDATIONS RELATED TO ASBESTOS OR ASBESTOS HAZARDS. ASBESTOS, SOME WASTE, OR HAZARDOUS MATERIALS, SUCH ASBESTOS, HAZARDOUS, OR EXCAVATIONS, MICHAEL MUROFF ARCHITECT,LLC. DO ALL DO NOT SPECIFY OR MAKE RECOMMENDATIONS RELATED TO ASBESTOS IN ANY FORM. ASBESTOS EXPOSURE ASSESSMENTS, APPRAISALS, ASBESTOS HEALTH HAZARDS OR EXPOSURE, CORRECTIVE ACTION PROGRAMS, OR ASBESTOS CONTAINMENT OR REMOVAL PROGRAMS. THE OWNER OF THIS BUILDING HAS RETAINED AN INDEPENDENT ASBESTOS CONSULTANT. ALL INQUIRIES SHOULD BE DIRECTED TO THE OWNER OR HIS ASBESTOS CONSULTANT. ALL ALTERATIONS TO THIS DOCUMENT MUST BE MADE BY A LICENSED ARCHITECT OR ENGINEER OR PERSONS OTHERWISE ALLOWED ACTING UNDER THE DIRECTION OF A REGISTERED ARCHITECT. THE ALTERING ARCHITECT SHALL AFFIX HIS SEAL AND THE NOTATION "ALTERED BY" FOLLOWED BY HIS SIGNATURE AND DATE OF ALTERATION AND A SPECIFIC DESCRIPTION OF THE ALTERATION.

Michael Muroff Architect, LLC
333 Hudson Street
Suite 501
New York, NY 10013
Tel: 646. 230. 7111
Fax: 646. 230. 7277
NY Licence #015011

221-227
EAST 138th STREET

NYC DOB BIN: 2000973, 2000974
Block: 2340 Lots: 56, 58

BRACING ELEVATIONS AND DETAILS

STATE OF NEW YORK — JOSEPH ANTHONY GULINO — 070916 — LICENSED PROFESSIONAL ENGINEER

Date: 1-14-15
Scale: As Noted
Project No.: 14-165
Drawing By: EGK
Checked By: JAG

S-016.00

SHEET # 20 OF 27

ZONING ANALYSIS:

221-227 EAST 138th STREET, BRONX NY

BLOCK:	2340
LOTS:	56, 58
MAP:	6a
COMMUNITY DISTRICT:	1
ZONE:	M1–4 / R7X / SPECIAL MIXED USE DISTRICT MX–13
OTHER:	INCLUSIONARY HOUSING DESIGNATED AREA FLOOD ZONE AE, EL11
LOT SIZE:	100' x 100' = 10,000 SF

BULK REGUALTIONS:

ZR 123–64(a)(4) IN INCLUSIONARY HOUSING DEGINATED AREAS, THE MAXIMUM FLOOR AREA RATIO PERMITTED FOR ZONING LOTS CONTAINING RESIDENTIAL, COMMERCIAL, COMMUNITY FACILITY OR MANUFACTURING USES SHALL BE THE BASE FLOOR AREA RATIO SET FORTH IN SECTION 23–952 FOR THE APPLICABLE DISTRICT:

ZONE	BASE FAR	MAX. FAR
R7X	3.75	5.00

MAX. INCLUSIONARY HOUSING PROVIDED, THEREFORE MAX FAR OF 5.0 APPLIES. SEE INCLUSIONARY HOUSING ANALYSIS @ Z–003.

PROPOSED:

FLOOR	USE	GROSS FA	DEDUCTIONS	NET FA
CELLAR	PKG/STORAGE	10,000.00 SF	10,000.00 SF	0 SF
FIRST	COMMERCIAL	3,465.93 SF	0 SF	3,465.93 SF
FIRST	RESIDENTIAL	1,669.83 SF	1,042.89 SF	626.94 SF
SECOND	RESIDENTIAL	6,563.19 SF	808.47 SF	5,754.74 SF
THIRD	RESIDENTIAL	6,565.63 SF	796.97 SF	5,768.66 SF
FOURTH	RESIDENTIAL	6,563.19 SF	985.65 SF	5,577.54 SF
FIFTH	RESIDENTIAL	6,565.63 SF	796.97 SF	5,768.66 SF
SIXTH	RESIDENTIAL	6,563.19 SF	985.65 SF	5,577.54 SF
SEVENTH	RESIDENTIAL	6,565.63 SF	796.97 SF	5,768.66 SF
EIGHT	RESIDENTIAL	6,563.19 SF	985.65 SF	5,577.54 SF
NINTH	RESIDENTIAL	4,940.66 SF	722.56 SF	4,218.10 SF
TENTH	RESIDENTIAL	3,522.10 SF	1,650.06 SF	1,872.04 SF
TOTAL		69,548.17 SF	19,571.84 SF	49,976.33 SF

ZONING FLOOR AREA = 49,976.33 SF < 50,000 SF, ∴ COMPLIES
COMMERCIAL FLOOR AREA = 3,465.93 SF
RESIDENTIAL FLOOR AREA = 46,510.4 SF

ZR 123–64(b) LOT COVERAGE REQUIREMENTS SHALL NOT APPLY

DETERMINATION OF BASE PLANE:

ZR 64–131 MEASUREMENT OF HEIGHT:
ALL MEASUREMENTS OF HEIGHT ABOVE CURB LEVEL, BASE PLANE, BASE FLOOD ELEVATION, GRADE, OR OTHER SIMILAR GROUND RELATED DATUM SHALL BE FROM THE FLOOD RESISTANT CONSTRUCTION ELEVATION.

ZR 64–11 THE FLOOD RESISTANT CONSTRUCTION ELEVATION IS THE GREATER OF:
(a) THE DESIGN FLOOD ELEVATION (APPENDIX G)
(b) THE BASE FLOOD ELEVATION INDICATED ON THE FLOOD MAPS, PLUS THE ADDITIONAL ELEVATION REQUIRED ABOVE BASE FLOOD ELEVATION FOR THE APPLICABLE OCCUPANCY CATEGORY WHEN DETERMINING THE DESIGN FLOOD ELEVATION.

FOR STRUCTURAL OCCUPANCY CATEGORY II:
DESIGN FLOOD ELEVATION = BASE FLOOD ELEVATION = 11
∴ BASE PLANE ELEVATION = 11' AS PER NAVD88 DATUM

HEIGHT AND SETBACK REGUALTIONS:

ZR 123–662(b) IN SPECIAL MIXED USE DISTRICTS WHERE THE RESIDENCE DISTRICT DESIGNATION IS R7X, NO BUILDING OR OTHER STRUCTURE SHALL EXCEED THE MAXIMUM BUILDING HEIGHT SPECIFIED IN TABLE B OF THIS SECTION:

ZONE	MIN. BASE HEIGHT	MAX. BASE HEIGHT	MAX. BLDG. HEIGHT
R7X	60'	85'	125'

PROPOSED BASE HEIGHT = 85'–0", ∴ COMPLIES
PROPOSED BUILDING HEIGHT = 107'–0", ∴ COMPLIES

SETBACKS ARE REQUIRED FOR ALL PORTIONS OF BUILDINGS THAT EXCEED THE MAXIMUM BASE HEIGHT SPECIFIED IN TABLE B. SUCH SETBACKS SHALL BE PROVIDED IN ACCORDANCE WITH THE FOLLOWING PROVISIONS:

ZR 123–662(b)(1) BUILDING WALLS FACING A WIDE STREET SHALL PROVIDE A SETBACK AT LEAST TEN FEET DEEP FROM SUCH WALL OF THE BUILDING AT A HEIGHT NOT LOWER THAN THE MINIMUM BASE HEIGHT SPECIFIED IN TABLE B. BUILDING WALLS FACING A NARROW STREET SHALL PROVIDE A SETBACK AT LEAST 15 FEET DEEP FROM SUCH WALL OF THE BUILDING AT A HEIGHT NOT LOWER THAN THE MINIMUM BASE HEIGHT SPECIFIED IN TABLE B.

SETBACK @ 138TH STREET = > 10', ∴ COMPLIES SEE Z–002
SETBACK @ CANAL PLACE = > 15', ∴ COMPLIES
SETBACK @ RIDER AVENUE = > 15', ∴ COMPLIES

ZR 123–662(c) PERMITTED OBSTRUCTIONS AND DORMER PROVISIONS OBSTRUCTIONS SHALL BE PERMITTED PERSUANT TO SECTION 23–62, 24–52, OR 43–42. IN ADDITION, WITHIN A REQUIRED SETBACK AREA A DORMER MAY EXCEED A MAXIMUM BASE HEIGHT SPECIFIED IN TABLES A OR B OF THIS SECTION AN THUS PENETRATE A REQUIRED SETBACK AREA, PROVIDED THAT, ON ANY STREET FRONTAGE THE AGREGATE WIDTH OF ALL DORMERS AT THE MAXIMUM BASE HEIGHT DOES NOT EXCEED 60 PERCENT OF THE LENGTH OF A STREET WALL AT THE HIGHEST STORY ENTIRELY BELOW THE BASE MAXIMUM HEIGHT. AT ANY LEVEL ABOVE THE MAXIMUM BASE HEIGHT, THE LENGTH OF A STREET WALL OF A DORMER SHALL BE DECRESED BY ONE PERCENT FOR EVERY FOOT THAT SUCH LEVEL OF DORMER EXCEEDS THE MAXIMUM BASE HEIGHT.

FOR DORMER CALCULATIONS, SEE Z–002

DENSITY:

ZR 23–22 MAX. RESIDENTIAL FA PERMITTED / APPLICABLE FACTOR

ZONE	FACTOR FOR DWELLING UNITS
R7	680

ALLOWABLE DENSITY = 46,510.4 / 680 = 68 DUS MAX.
PROPOSED DENSITY = 57 DUS < 68 DUS ∴ COMPLIES

YARDS:

ZR 123–652 NO FRONT YARDS OR SIDE YARDS ARE REQUIRED IN SPECIAL MIXED USE DISTRICTS.

ZR 23–541 IN THE DISTRICTS INDICATED, NO REAR YARD SHALL BE REQUIRED WITHIN 100 FEET OF THE POINT OF INTERSECTION OF TWO STREET LINES INTERSECTING AT AN ANGLE OF 135 DEGREES OR LESS.

30' REAR YARD PROVIDED FOR LIGHT AND AIR

PARKING:

ZR 44–21 PARKING REQUIREMENTS FOR COMMERCIAL USES (M1–4 DISTRICT):
FOR FOOD STORES AND GENERAL RETAIL, NO PARKING REQUIRED.

ZR 25–241 RESIDENTIAL PARKING REDUCED REQUIREMENTS:

LOT AREA	PARKING REQUIRED	DISTRICT
10,000 SF OR LESS	30% OF DUS	R7X

30% OF 57 DWELLING UNITS = 17 SPACES REQUIRED
17 SPACES PROVIDED ∴ COMPLIES

ZR 25–81 BICYCLE PARKING REQUIREMENTS:
IN R7 DISTRICT, ENCLOSED ACCESSORY BICYCLE PARKING SPACES SHALL BE PROVIDED FOR AT LEAST THAT AMOUNT SPECIFIED FOR THE APPLICABLE USE SET FORTH IN THE TABLE IN THIS SECTION.

USE	BICYCLE PARKING REQUIRED
RES. UG2	1 PER 2 DWELLING UNITS

ZR 25–25 MODIFICATION OF REQUIREMENTS FOR PUBLIC, PUBLICLY–ASSISTED AND GOVERNMENT ASSISTED HOUSING:
IN ALL DISTRICTS, AS INDICATED, ACCESSORY OFF–STREET PARKING SPACES SHALL BE PROVIDED FOR AT LEAST THAT PERCENTAGE OF THE TOTAL NUMBER OF DWELLING UNITS IN EACH CATEGORY AS SET FORTH IN THE FOLLOWING TABLE:

PUBLIC HOUSING DEVELOPMENTS OR DWELLING UNITS FOR LOW INCOME TENANTS	%	DISTRICT
	15%	R7X

TOTAL # OF LOW INCOME UNITS = 12 x 15% = 2 PARKING SPACES
∴ 2 SPACES SHALL BE PROVIDED FOR LOW INCLOME UNITS, COMPLIES

ZR 25–85 FLOOR AREA EXEMPTION = 15 SF / REQUIRED SPACE

REQUIRED BICYCLE PARKING = 57 DUS / 2 = 29 SPACES
FLOOR AREA EXEMPT = 29 x 15 = 435 SF

ZR 25–65 SURFACING:
IN ALL DISTRICTS, AS INDICATED, ALL OPEN OFF–STREET PARKING SPACES SHALL BE SURFACED WITH ASPHALTIC OR PORTLAND CEMENT CONCRETE, OR OTHER HARD–SURFACED DUSTLESS MATERIAL, AT LEAST FOUR INCHES THICK.

ZR 25–66 SCREENING:
(A) IN ALL DISTRICTS, AS INDICATED, EXCEPT WHERE SUCH DISTRICTS ARE LOCATED IN LOWER DENSITY GROWTH MANAGEMENT AREAS, ALL OPEN OFF–STREET PARKING AREAS OR GROUPS OF INDIVIDUAL GARAGES WITH 10 SPACES OR MORE, THAT ARE LOCATED EITHER AT NATURAL GRADE OR ON A ROOF, SHALL BE SCREENED FROM ALL ADJOINING ZONING LOTS, INCLUDING SUCH ZONING LOTS SITUATED ACROSS A STREET, BY EITHER:

(1) A STRIP AT LEAST FOUR FEET WIDE, DENSELY PLANTED WITH SHRUBS OR TREES THAT ARE AT LEAST FOUR FEET HIGH AT THE TIME OF PLANTING AND THAT ARE OF A TYPE WHICH MAY BE EXPECTED TO FORM A YEAR–ROUND DENSE SCREEN AT LEAST SIX FEET HIGH WITHIN THREE YEARS; OR

(2) A WALL OR BARRIER OR UNIFORMLY–PAINTED FENCE OF FIRE RESISTANT MATERIAL AT LEAST SIX FEET HIGH, BUT NOT MORE THAN EIGHT FEET ABOVE FINISHED GRADE (OR ABOVE THE ROOF LEVEL, IF ON A ROOF). SUCH WALL, BARRIER OR FENCE MAY BE OPAQUE OR PERFORATED, PROVIDED THAT NOT MORE THAN 50 PERCENT OF THE FACE IS OPEN.

STREET TREES

FOR COMPLIANCE, SEE Z–002

FLOOD ZONE REGULATIONS

PROPERTY IS LOCATED IN SPECIAL FLOOD HAZARD AREA X AND AE(11).

- SEE DRAWING BC–001 FOR BUILDING CODE APPENDIX "G" FLOOD ZONE REGULATIONS.
- 2014 FIRM FLOOD ELEVATION DEFINED AT 11'–0".
- DWELLING UNITS SHALL BE LOCATED ENTIRELY ABOVE THE LOWEST OCCUPIABLE LEVEL.

LOWEST FLOOR WITH DWELLING UNITS = 2 ∴ COMPLIES

- CELLAR SHALL BE WET–FLOOD PROOFED IN ACCORDANCE WITH FLOOD RESISTANT CONSTRUCTION STANDARDS AND USED ONLY FOR PARKING, STORAGE, OR BUILDING ACCESS, OR SHALL BE OTHERWISE UNOCCUPIABLE SPACE.

SPECIAL MIXED USE DISTRICT MX-13 REGULATIONS

ZR 123–32 ENVIRONMENTAL CONDITIONS:
IN SPECIAL MIXED USE DISTRICTS, ALL NEW DWELLING UNITS SHALL BE PROVIDED WITH A MINIMUM 35DB(A) OF WINDOW WALL ATTENUATION TO MAINTAIN AN INTERIOR NOISE LEVEL OF 45DB(A) OR LESS, WITH WINDOWS CLOSED, AND SHALL PROVIDE AN ALTERNATE MEANS OF VENTILATION.

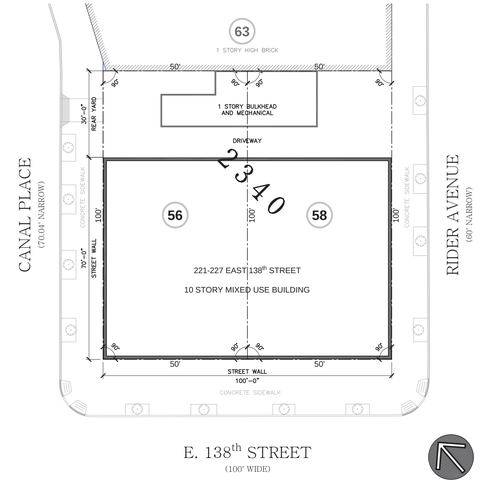

2 PLOT PLAN

SCALE: NTS

QUALITY HOUSING PROGRAM:

ZR 28–21 SIZE OF DWELLING UNITS: A DWELLING UNIT SHALL HAVE AN AREA OF AT LEAST 400 SQUARE FEET OF FLOOR AREA.

ZR 28–22 WINDOWS: ALL WINDOWS IN THE RESIDENTIAL PORTION OF A DEVELOPMENT OR ENLARGEMENT SHALL BE DOUBLE GLAZED.

ZR 28–23 REFUSE STORAGE AND DISPOSAL: IN R6 THROUGH R10 DISTRICTS, DEVELOPMENTS WITH NINE OR MORE DWELLING UNITS PER VERTICAL CIRCULATION CORE SHALL COMPLY WITH THE PROVISIONS OF THIS SECTION.

THE STORAGE OF REFUSE SHALL OCCUR ENTIRELY WITHIN AN ENCLOSED AREA ON THE ZONING LOT AND APPROPRIATE LOCATIONS WITHIN THE ZONING LOT SHALL BE DELINEATED FOR THIS PURPOSE: AT LEAST ONE FOR RESIDENTIAL USE AND AT LEAST ONE FOR COMMUNITY FACILITY OR COMMERCIAL USES. RESIDENTIAL STORAGE AND REMOVAL LOCATIONS SHALL BE PROVIDED AT THE RATE OF 2.9 CUBIC FEET PER DWELLING UNIT.

57 DWELLING UNITS X 2.9 CUBIC FEET = 165.3 FT^3 REQUIRED
1,248 FT^3 PROVIDED > 165.3 FT^3, SEE A–100.00 ∴ COMPLIES

A REFUSE DISPOSAL ROOM OF NOT LESS THAN TWELVE SQUARE FEET WITH NO DIMENSION LESS THAN THREE FEET SHALL BE PROVIDED ON EACH STORY THAT HAS ENTRANCES TO DWELLING UNITS OR ROOMING UNITS. TWELVE SQUARE FEET OF SUCH REFUSE STORAGE ROOM SHALL BE EXCLUDED FROM THE DEFINITION OF FLOOR AREA.

ZR 28–24 LAUNDRY FACILITIES:
IF THE BUILDING PROVIDES THE FOLLOWING, THEN THAT PORTION OF THE LAUNDRY ROOM WHICH IS USED TO MEET THESE MINIMUM REQUIREMENTS SHALL BE EXCLUDED FROM THE DEFINITION OF FLOOR AREA:

NO LAUNDRY FACILITIES PROVIDED. NO DEDUCTIONS CLAIMED.

ZR 28–25 DAYLIGHT IN CORRIDORS:

COMPLIES (SEE DWG Z–004), ∴ 50% OF HALLWAYS DEDUCTED.

ZR 28–31 REQUIRED RECREATION SPACE:
ALL DEVELOPMENTS, WITH NINE OR MORE DWELLING UNITS UNITS, SHALL PROVIDE AT LEAST THE MINIMUM AMOUNT OF RECREATION SPACE AS SET FORTH IN THE TABLE IN THIS SECTION.

THE FLOOR SPACE OF INDOOR RECREATION SPACE PROVIDED IN ACCORDANCE WITH THE STANDARDS SET FORTH IN SECTION 28–32 (STANDARDS FOR RECREATION SPACE), NOT EXCEEDING THE AMOUNT REQUIRED IN THE TABLE, SHALL BE EXCLUDED FROM THE DEFINITION OF FLOOR AREA.

DISTRICT	MINIMUM REQUIRED RECREATION SPACE
R7	3.3% OF RESIDENTIAL FLOOR AREA

REQUIRED REC. SPACE = 3.3% OF 46,527.62 SF = 1,535 SF
REC. SPACE PROVIDED = 1,034 SF INDOOR @ 10TH FL
1,115 SF OUTDOOR @ 10TH FL
326 SF INDOOR @ 1ST FL
TOTAL REC PROVIDED = 2,475 SF > 1,535 SF, ∴ COMPLIES
INDOOR REC DEDUCTED = 1,034 SF + 326 SF = 1,360 SF < 1,535
SEE Z–006 FOR COMPLIANCE WITH REC SPACE STANDARDS

ZR 28–41 DENSITY PER CORRIDORS:
IF THE NUMBER OF DWELLING UNITS OR ROOMING UNITS SERVED BY A VERTICAL CIRCULATION CORE AND CORRIDOR ON EACH STORY DOES NOT EXCEED THE NUMBER SET FORTH IN THE FOLLOWING TABLE, 50 PERCENT OF THE SQUARE FEET OF THE CORRIDOR SERVING SUCH DWELLING UNITS OR ROOMING UNITS ON SUCH STORY MAY BE EXCLUDED FROM THE DEFINITION OF FLOOR AREA.

DISTRICT	NUMBER OF DUS SERVED BY A CORRIDOR / STORY
R7	11

8 DUS / CORRIDOR < 11, ∴ 50% CORRIDOR EXCLUDED

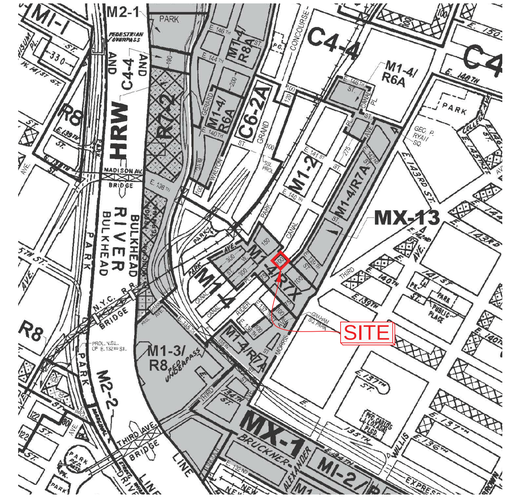

1 ZONING MAP: 6a ZONE: M1–4/R7X/MX–13
BLOCK: 2340 LOTS: 56,58

SCOPE OF WORK

NEW 10 STORY MIXED USE BUILDING

SEPARATE APPLICATIONS

- STRUCTURAL #
- MECHANICAL / PLUMBING / BOILER #
- TEMPORARY STANDPIPE #
- SPRINKLER / STANDPIPE #
- FIRE ALARM #
- BPP # 220470808
- SD–1 AND SD–2 #
- FIRE PROTECTION PLAN #
- STREET TREES #
- SITE SAFETY PLAN #

DOB ARCHITECTURAL DRAWING SHEET LIST

1.	Z–001.00	ZONING – ANALYSIS
2.	Z–002.00	ZONING – DIAGRAM, SITE PLAN, AND STREET TREES
3.	Z–003.00	ZONING – INCLUSIONARY HOUSING
4.	Z–004.00	ZONING – FLOOR AREA CALCULATIONS
5.	Z–005.00	ZONING – FLOOR AREA CALCULATIONS
6.	Z–006.00	ZONING – FLOOR AREA CALCULATIONS
7.	BC–001.00	BUILDING CODE
8.	EN–001.00	ENERGY CODE COMPLIANCE
9.	G–001.00	GENERAL NOTES
10.	G–002.00	ADA DETAILS
11.	G–003.00	ADA DETAILS
12.	A–001.00	SITE SURVEY
13.	A–010.00	EGRESS AND FIRE RATING
14.	A–020.00	LIGHT AND AIR CALCULATIONS
15.	A–100.00	CONSTRUCTION PLAN – CELLAR
16.	A–101.00	CONSTRUCTION PLAN – FLOOR 1
17.	A–102.00	CONSTRUCTION PLAN – FLOOR 2
18.	A–103.00	CONSTRUCTION PLAN – FLOORS 3,5,6
19.	A–104.00	CONSTRUCTION PLAN – FLOORS 4,6,8
20.	A–105.00	CONSTRUCTION PLAN – FLOOR 9
21.	A–106.00	CONSTRUCTION PLAN – FLOOR 10
22.	A–107.00	CONSTRUCTION PLAN – ROOF AND BULKHEAD
23.	A–200.00	BUILDING ELEVATIONS – CANAL PLACE AND 138TH STREET
24.	A–202.00	BUILDING ELEVATIONS – RIDER AVENUE AND REAR
25.	A–300.00	BUILDING SECTION – TRANSVERSE
26.	A–301.00	BUILDING SECTION – LONGITUDINAL
27.	A–400.00	STAIR SECTIONS
28.	A–500.00	TYPICAL ROOF DETAILS
29.	A–502.00	TYPICAL FIRESTOPPING DETAILS
30.	A–503.00	TYPICAL COMPACTOR DETAILS
31.	A–600.00	PARITITION SCHEDULE

ACCESSORY DRAWING SUBMISSION LIST

1.	ZD–1	ZONING DIAGRAM
2.	3604970091F	FEMA FIRM 2007
3.	3604970091G	FEMA FIRM 2013 PRELIMINARY
4.		SITE SURVEY

REVISIONS

NO.	DESCRIPTIONS	DATE
1		

NO.	TO WHOM ISSUED	DATE
1	DOB	5–29–15

ISSUES

Tahoe Development Group LLC — Owner
8217 153rd Avenue — Anthony Gurino
Howard Beach, NY 11414 — 718 835 4700

Michael Muroff Architect, LLC — Architect
333 Hudson Street, Suite 501 — Michael Muroff
New York, NY 10013 — 646 230 7111

Structural Engineering Systems, PLLC — Structural Engineer
214–41 42nd Avenue, Suite 2B — Joseph Culino
Bayside, NY 11361 — 718 224 7161

S. Schwartz Engineering, PLLC — MEP Engineer
15 West 39th Street, Suite PH — Simon Schwartz
New York, NY 10018 — 212 695 3509

THIS DRAWING IS AN INSTRUMENT OF SERVICE AND SHALL REMAIN THE PROPERTY OF MICHAEL MUROFF ARCHITECT,L.L.C., WHETHER THE PROJECT FOR WHICH IT IS MADE IS EXECUTED OR NOT. THIS DRAWING SHALL NOT BE USED BY THE OWNER OR OTHERS ON OTHER PROJECTS, FOR ADDITIONS TO THIS PROJECT OR FOR COMPLETION OF THIS PROJECT BY OTHERS EXCEPT BY AGREEMENT IN WRITING WITH MICHAEL MUROFF ARCHITECT,L.L.C. SUBMISSION OR DISTRIBUTION TO MEET OFFICIAL REGULATORY REQUIREMENTS OR FOR OTHER PURPOSES IN CONNECTION WITH THE PROJECT IS NOT TO BE CONSTRUED AS PUBLICATION IN DEROGATION OF THE ARCHITECT'S COPYRIGHT OR OTHER RESERVED RIGHTS. REPRODUCTION OF THIS DRAWING IN THE WHOLE OR IN PART IS PROHIBITED. TITLE TO THIS DRAWING BELONGS TO MICHAEL MUROFF ARCHITECT,L.L.C., WITHOUT PREJUDICE.

THE FIRM OF MICHAEL MUROFF ARCHITECT,L.L.C. HAS NOT BEEN RETAINED TO DO FIELD SUPERVISION OR INSPECTION. THE FIRM OF MICHAEL MUROFF ARCHITECT,L.L.C. ITS PRINCIPALS, EMPLOYEES, AND CONSULTANTS HAVE NOT BEEN RETAINED TO PROVIDE ANY SERVICES RELATED TO ASBESTOS OR ASBESTOS CONTAINING MATERIALS IN ANY FORM. ANY AGREEMENTS, DISCLOSURES, MICHAEL MUROFF ARCHITECT,L.L.C. ET AL. DO NOT EXCEPT OR MAKE RECOMMENDATIONS RELATED TO ASBESTOS IN ANY FORM. ASBESTOS EXPOSURE ASSESSMENTS, APPRAISALS ASBESTOS HEALTH HAZARDS OR EXPOSURE, CORRECTIVE ACTION PROGRAMS, OR ASBESTOS MANAGEMENT PLANS ARE NOT PART OF THE SERVICES PROVIDED BY MICHAEL MUROFF ARCHITECT,L.L.C. OR ITS PRINCIPALS, EMPLOYEES OR CONSULTANTS. ALL INQUIRIES SHOULD BE DIRECTED TO THE OWNER OR HIS ASBESTOS CONSULTANT. IT IS A VIOLATION OF THE PROFESSIONAL LICENSE LAW FOR ANY PERSON TO ALTER THIS DRAWING IN ANY WAY, UNLESS ACTING UNDER THE DIRECTION OF A REGISTERED ARCHITECT. THE ALTERING ARCHITECT SHALL AFFIX HIS SEAL AND THE NOTATION "ALTERED BY" FOLLOWED BY HIS SIGNATURE AND DATE OF ALTERATION AND A SPECIFIC DESCRIPTION OF THE ALTERATION.

Michael Muroff Architect, LLC
333 Hudson Street
Suite 501
New York, NY 10013
Tel: 646. 230. 7111
Fax: 646. 230. 7277
NY Licence #015011

225 EAST 138th STREET

NYC DOB BIN: 2000973, 2000974
Block: 2340 Lots: 56, 58

ZONING ANALYSIS AND SITE PLAN

REGISTERED ARCHITECT MICHAEL MUROFF No. 015011 STATE OF NEW YORK

Date: 5–29–15
Scale: As Noted
Project No. : 14–165
Drawing By: RF
Checked By: MM

Z–001.00

SHEET # 1 OF 31

©

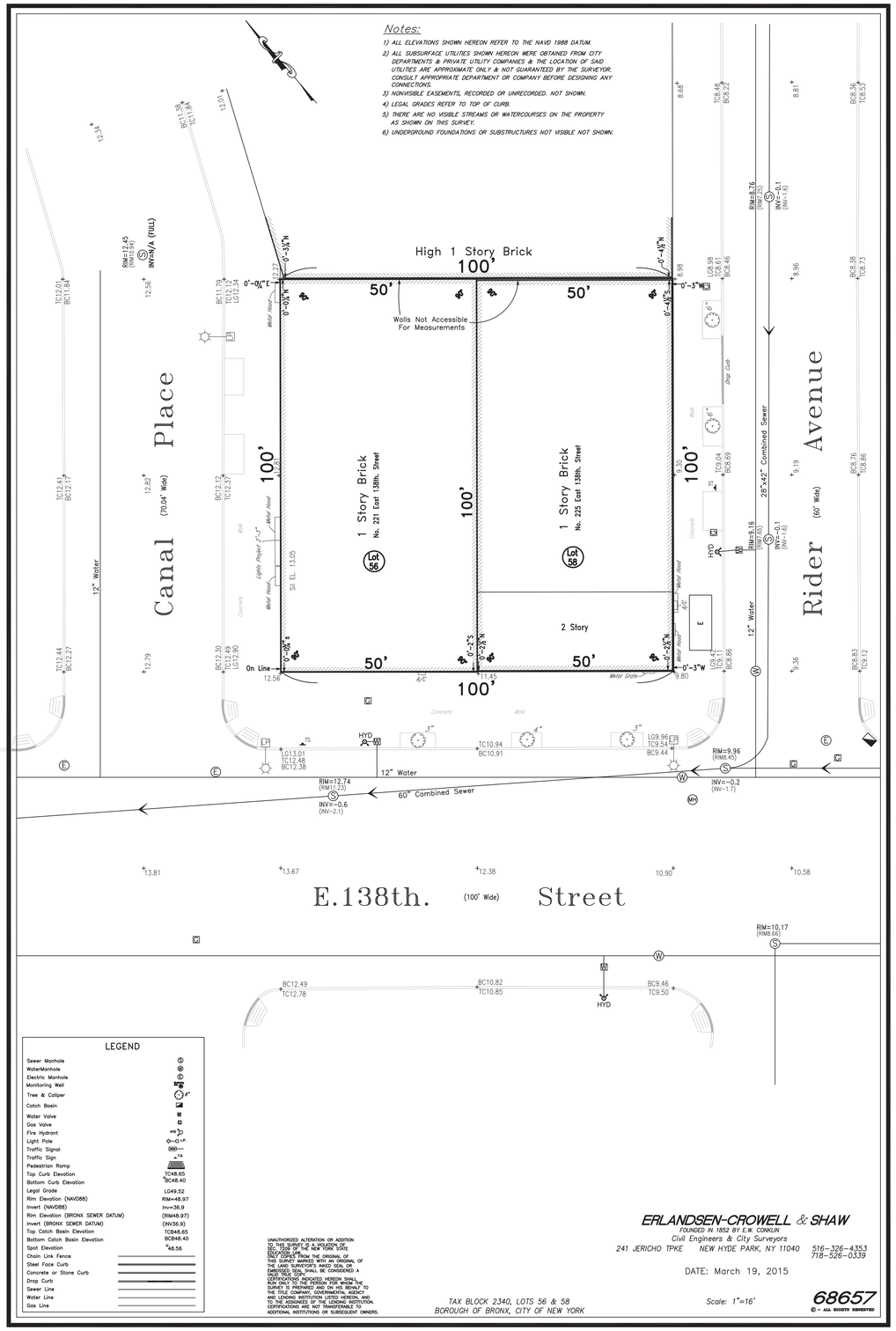

REVISIONS		
NO.	DESCRIPTIONS	DATE
1	DOB	5-29-15
NO.	TO WHOM ISSUED	DATE
	ISSUES	

Tahoe Development Group LLC
8217 153rd Avenue
Howard Beach, NY 11414
Owner
Anthony Gurino
718 835 4700

Michael Muroff Architect, LLC
333 Hudson Street, Suite 501
New York, NY 10013
Architect
Michael Muroff
646 230 7111

Structural Engineering Systems, PLLC
214-41 42nd Avenue, Suite 2B
Bayside, NY 11361
Structural Engineer
Joseph Gulino
718 224 7161

S. Schwartz Engineering, PLLC
15 West 39th Street, Suite PH
New York, NY 10018
MEP Engineer
Simon Schwartz
212 695 3509

THIS DRAWING IS AN INSTRUMENT OF SERVICE AND SHALL REMAIN THE PROPERTY OF MICHAEL MUROFF ARCHITECT,L.L.C. WHETHER THE PROJECT FOR WHICH IT IS MADE IS EXECUTED OR NOT. THIS DRAWING SHALL NOT BE USED BY THE OWNER OR OTHERS ON OTHER PROJECTS, FOR ADDITIONS TO THIS PROJECT OR FOR COMPLETION OF THIS PROJECT BY OTHERS EXCEPT BY AGREEMENT IN WRITING WITH MICHAEL MUROFF ARCHITECT,L.L.C. SUBMISSION OR DISTRIBUTION TO MEET OFFICIAL REGULATORY REQUIREMENTS OR FOR OTHER PURPOSES IN CONNECTION WITH THE PROJECT IS NOT TO BE CONSTRUED AS PUBLICATION IN DEROGATION OF THE RIGHTS OF MICHAEL MUROFF ARCHITECT,L.L.C. OR OTHERS. REPRODUCTION OF THIS DRAWING IN WHOLE OR IN PART IS PROHIBITED. TITLE TO THIS DRAWING BELONGS TO MICHAEL MUROFF ARCHITECT,L.L.C., WITHOUT PREJUDICE.

THE FIRM OF MICHAEL MUROFF ARCHITECT,L.L.C. HAS NOT BEEN RETAINED TO DO FIELD SUPERVISION OR INSPECTION. THE FIRM OF MICHAEL MUROFF ARCHITECT,L.L.C. ITS PRINCIPALS, EMPLOYEES, AND CONSULTANTS HAVE NOT BEEN RETAINED TO PROVIDE ANY SERVICES RELATED TO ASBESTOS, TOXIC WASTE, OR HAZARDOUS MATERIALS, THEIR REMOVAL, ABATEMENTS, OR ENCAPSULATING. MICHAEL MUROFF ARCHITECT,L.L.C. ET AL. DO NOT EXCEPT OR MAKE RECOMMENDATIONS RELATED TO ASBESTOS IN ANY FORM. ASBESTOS EXPOSURE ASSESSMENTS, APPRAISALS ASBESTOS HEALTH HAZARDS OR EXPOSURE, CORRECTIVE ACTION PROGRAMS, OR ASBESTOS MANAGEMENT PLANS ARE NOT PART OF THIS PROJECT. ALL ASBESTOS RELATED ISSUES SHOULD BE DIRECTED TO THE OWNER OR HIS ASBESTOS CONSULTANT. ALL INQUIRIES SHOULD BE DIRECTED TO THE OWNER OR HIS ASBESTOS CONSULTANT. IT IS A VIOLATION OF THE PROFESSIONAL LICENSE LAW FOR ANY PERSON TO ALTER THIS DRAWING IN ANY WAY, UNLESS ACTING UNDER THE DIRECTION OF A REGISTERED ARCHITECT. THE ALTERING ARCHITECT SHALL AFFIX HIS SEAL AND THE NOTATION "ALTERED BY" FOLLOWED BY HIS SIGNATURE AND DATE OF ALTERATION AND A SPECIFIC DESCRIPTION OF THE ALTERATION.

Michael Muroff Architect, LLC
333 Hudson Street
Suite 501
New York, NY 10013
Tel: 646. 230. 7111
Fax: 646. 230. 7277
NY Licence #015011

225 EAST 138th STREET

NYC DOB BIN: 2000973, 2000974
Block: 2340 Lots: 56, 58

SITE SURVEY

Date: 5-29-15
Scale: As Noted
Project No.: 14-165
Drawing By: RF
Checked By: MM

REGISTERED ARCHITECT MICHAEL MUROFF No. 015011 STATE OF NEW YORK

A-001.00

SHEET #12 OF 31

©

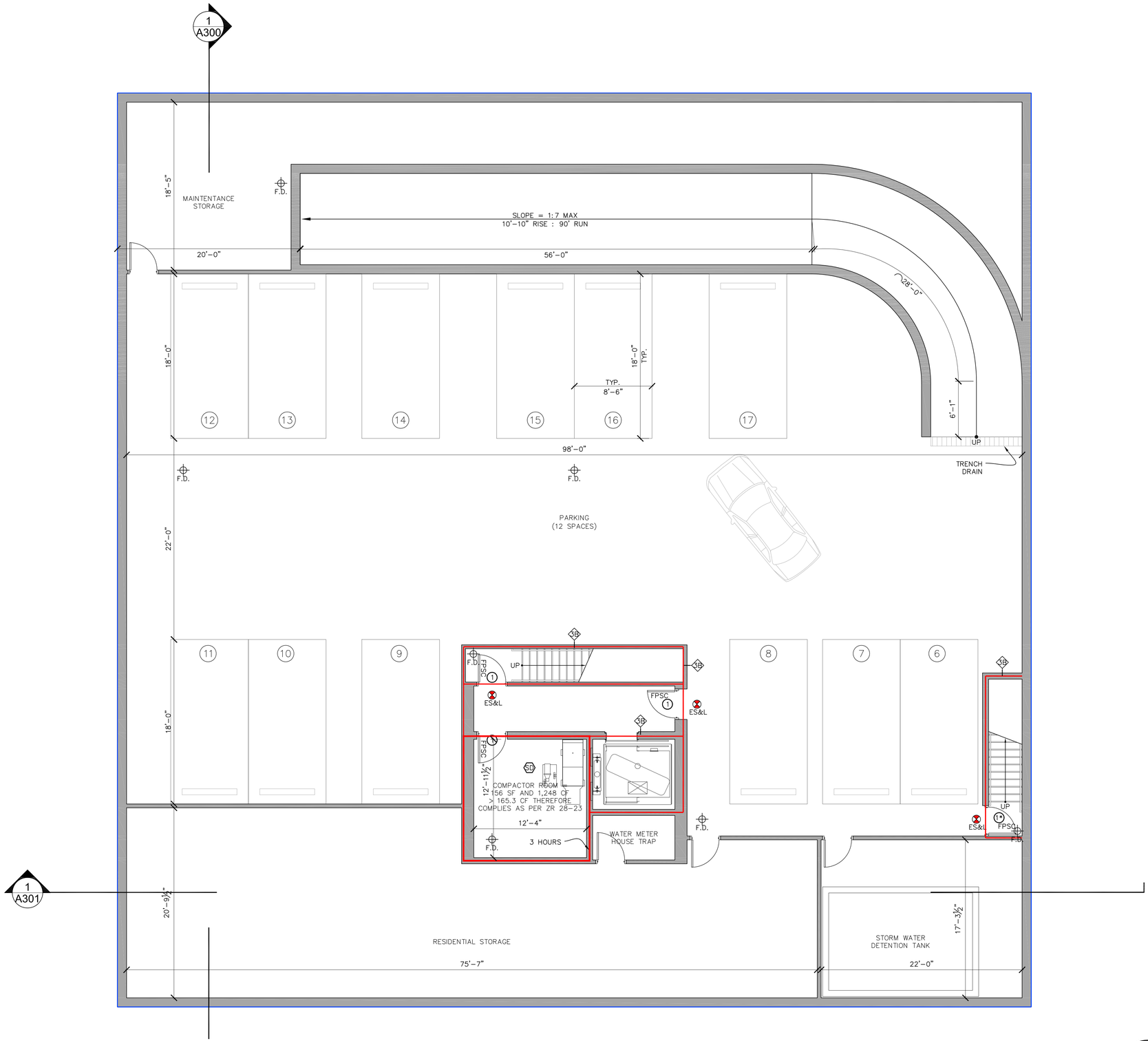

1 CONSTRUCTION PLAN - CELLAR

[EL = 1.5' PER NAVD88]

SCALE: 3/16" = 1'-0"

GRAPHICS LEGEND:

- 1 HOUR FIRE RATED PARTITION – SEE A-600
- 2 HOUR FIRE RATED PARTITION – SEE A-600
- 2B — 2 HR FR IMPACT RESISTANT EXIT ENCLOSURE – SEE A-600
- 3 HOUR FIRE RATED PARTITION – SEE A-600
- # — DOOR SCHEDULE
- MV — 50 CFM MECHANICAL VENTILATION
- ES&L — EXIT SIGN AND LIGHT – MAX. 5 WATTS PER SIDE
- SD — HARD WIRED NYC COMPLIANT SMOKE AND CO DETECTOR
- B-1 — KITCHEN / BATH TAG
- F.D. — FLOOR DRAIN
- R.D. — ROOF DRAIN
- OPEN TO BELOW
- ABOVE
- X'-XX" — DIMENSION MARKER
- 3 A100 — SECTION MARKER
- 3 A100 — ELEVATION MARKER

INTERIOR DOOR SCHEDULE:

DOOR #	DESCRIPTION	WIDTH x HEIGHT	FIRE RATING	MATERIAL
1	B LABEL 90 MIN.	3'-0" x 7'-0"	B-90 MIN. FPSC	H METAL
2	B LABEL 90 MIN.	3'-0" x 7'-0"	B-90 MIN. FPSC	MDF
3	BEDROOM/BATH	2'-10" x 7'-0"	–	WD/MDF
4	DOUBLE CLOSET	4'-0" x 7'-0"	–	WD/MDF
5	BEDROOM SLIDER	3'-0" x 7'-0"	–	WD/MDF

ALL ACCESS DOORS FOR MECHANICAL EQUIPMENT THROUGH FIRE RATED ENCLOSURES SHALL BE B-LABELED 90 MINTUE FIREPROOF SELF CLOSING.

APPENDIX G - FLOOD RESISTANT CONSTRUCTION NOTES:

G304.1 A-ZONE CONSTRUCTION STANDARDS. THE FOLLOWING STANDARDS SHALL APPLY TO POST-FIRM CONSTRUCTION AND SUBSTANTIAL IMPROVEMENTS LOCATED WITHIN A-ZONES.

G304.1.2 NONRESIDENTIAL. FOR BUILDINGS OR STRUCTURES THAT ARE NONRESIDENTIAL (FOR FLOOD ZONE PURPOSES), ALL POST-FIRM NEW BUILDINGS AND SUBSTANTIAL IMPROVEMENTS SHALL COMPLY WITH THE APPLICABLE REQUIREMENTS IN CHAPTER G3 AND ASCE 24, AND SHALL COMPLY WITH EITHER OF THE FOLLOWING:

1. ELEVATION OPTION. THE STRUCTURE SHALL COMPLY WITH ITEMS 1 THROUGH 6 OF SECTION G304.1.1; OR

2. DRY FLOODPROOFING OPTION. THE STRUCTURE SHALL COMPLY WITH THE FOLLOWING:

2.1. ELEVATION OF DRY FLOODPROOFING. THE STRUCTURE SHALL BE DRY FLOODPROOFED TO AT OR ABOVE THE DESIGN FLOOD ELEVATION SPECIFIED IN ASCE 24, TABLE 6-1;

2.2. DWELLING UNITS. WHERE DWELLING UNITS ARE LOCATED IN A BUILDING UTILIZING THE DRY FLOODPROOFING OPTION, THE FOLLOWING ADDITIONAL REQUIREMENTS SHALL BE MET:

2.2.1. ALL ROOMS AND SPACES WITHIN DWELLING UNITS SHALL BE LOCATED AT OR ABOVE THE DESIGN FLOOD ELEVATION;

2.2.2. NO MORE THAN ONE TOILET AND ONE SINK SHALL BE LOCATED BELOW THE DESIGN FLOOD ELEVATION. ANY SUCH TOILET ROOM SHALL NOT BE LOCATED WITHIN A DWELLING UNIT AND SHALL BE NO LARGER THAN REQUIRED BY CHAPTER 11; AND NO ROUGHING THEREIN SHALL BE PERMITTED TO ACCOMMODATE ADDITIONAL FIXTURES;

2.2.3. NO MORE THAN ONE TWO-COMPARTMENT LAUNDRY TRAY SHALL BE PERMITTED BELOW THE DESIGN FLOOD ELEVATION;

2.2.4. NO KITCHENS OR KITCHENETTES SHALL BE PERMITTED BELOW THE DESIGN FLOOD ELEVATION;

2.2.5. A RESTRICTIVE DECLARATION NOTING THE ABOVE RESTRICTIONS SHALL BE FILED WITH THE CITY REGISTER OR COUNTY CLERK, AND THE PAGE NUMBER AND LIBER NUMBER SHALL BE IDENTIFIED IN THE PERMIT APPLICATION AND ON THE CERTIFICATE OF OCCUPANCY.

2.3. UTILITIES AND EQUIPMENT. UTILITIES AND ATTENDANT EQUIPMENT SHALL BE LOCATED WITHIN THE DRY FLOODPROOFED ENCLOSURE, OR MAY BE LOCATED OUTSIDE THE DRY FLOODPROOFED ENCLOSURE PROVIDED THAT THEY ARE LOCATED AT OR ABOVE THE DESIGN FLOOD ELEVATION SPECIFIED IN ASCE 24, TABLE 7-1 OR ARE CONSTRUCTED SO AS TO PREVENT WATER FROM ENTERING OR ACCUMULATING WITHIN THE COMPONENTS DURING CONDITIONS OF FLOODING IN ACCORDANCE WITH ASCE 24.

2.4. CERTIFICATIONS. APPLICATIONS SHALL CONTAIN APPLICABLE CERTIFICATIONS IN ACCORDANCE WITH SECTION G104.5; AND

2.5. SPECIAL INSPECTIONS. SPECIAL INSPECTIONS SHALL BE AS REQUIRED BY SECTION G105.

SEE A-120 SERIES FOR INTERIOR LIGHTING ENERGY COMPLIANCE

SEE A-100 FOR FLOOD RESISTANT CONSTRUCTION NOTES

REVISIONS		
NO.	DESCRIPTIONS	DATE
1	DOB	5-29-15

NO.	TO WHOM ISSUED	DATE
	ISSUES	

Tahoe Development Group LLC — Owner
8217 153rd Avenue — Anthony Gurino
Howard Beach, NY 11414 — 718 835 4700

Michael Muroff Architect, LLC — Architect
333 Hudson Street, Suite 501 — Michael Muroff
New York, NY 10013 — 646 230 7111

Structural Engineering Systems, PLLC — Structural Engineer
214-41 42nd Avenue, Suite 2B — Joseph Gulino
Bayside, NY 11361 — 718 224 7161

S. Schwartz Engineering, PLLC — MEP Engineer
15 West 39th Street, Suite PH — Simon Schwartz
New York, NY 10018 — 212 695 3509

THIS DRAWING IS AN INSTRUMENT OF SERVICE AND SHALL REMAIN THE PROPERTY OF MICHAEL MUROFF ARCHITECT,L.L.C. WHETHER THE PROJECT FOR WHICH IT WAS PREPARED IS EXECUTED OR NOT. THE REPRODUCTION, ALTERATION OR REPUBLICATION OF THIS DRAWING FOR ANY OTHER PURPOSE, FOR ADDITIONS TO THIS PROJECT OR FOR COMPLETION OF THIS PROJECT BY OTHERS EXCEPT BY AGREEMENT IN WRITING WITH MICHAEL MUROFF ARCHITECT,L.L.C. SUBMISSION OR DISTRIBUTION TO MEET OFFICIAL REGULATORY REQUIREMENTS OR FOR OTHER PURPOSES IN CONNECTION WITH THIS PROJECT IS NOT TO BE CONSTRUED AS PUBLICATION IN DEROGATION OF THE RIGHTS OF MICHAEL MUROFF ARCHITECT,L.L.C. REPRODUCTION OR PUBLICATION BY ANY METHOD OR MEANS OR IN PART IS PROHIBITED. TITLE TO THIS DRAWING BELONGS TO MICHAEL MUROFF ARCHITECT,L.L.C. WITHOUT PREJUDICE.

THE FIRM OF MICHAEL MUROFF ARCHITECT,L.L.C. HAS NOT BEEN RETAINED TO DO FIELD SUPERVISION OR INSPECTION. THE FIRM OF MICHAEL MUROFF ARCHITECT,L.L.C. DOES NOT ASSUME RESPONSIBILITY FOR THE PROTECTION OF THE ENVIRONMENT, PROVIDE ANY SERVICES RELATED TO ASBESTOS, TOXIC WASTE, OR HAZARDOUS MATERIALS, THEIR REMOVAL, ABATEMENT, OR ENCAPSULATING. MICHAEL MUROFF ARCHITECT,L.L.C. ET AL. DO NOT SPECIFY OR MAKE RECOMMENDATIONS RELATED TO ASBESTOS IN ANY FORM. MICHAEL MUROFF ARCHITECT,L.L.C. ET AL. DO NOT ASSUME RESPONSIBILITY FOR ANY ASBESTOS ENVIRONMENT OR ASBESTOS CONTAINMENT OR REMOVAL PROCEDURES. THE OWNER IS TO HAVE BEEN RETAINED AN ASBESTOS ENVIRONMENTAL CONSULTANT. ALL INQUIRIES SHOULD BE DIRECTED TO THE OWNER OR HIS ASBESTOS CONSULTANT. IT IS A VIOLATION OF THE PROFESSIONAL LICENSE LAW FOR ANY PERSON TO ALTER THIS DRAWING IN ANY WAY, UNLESS ACTING UNDER THE DIRECTION OF A REGISTERED ARCHITECT. THE ALTERING ARCHITECT SHALL AFFIX HIS SEAL AND THE NOTATION "ALTERED BY" FOLLOWED BY HIS SIGNATURE AND DATE OF ALTERATION AND A SPECIFIC DESCRIPTION OF THE ALTERATION.

Michael Muroff Architect, LLC
333 Hudson Street
Suite 501
New York, NY 10013
Tel: 646. 230. 7111
Fax: 646. 230. 7277
NY LIcence #015011

225 EAST 138th STREET

NYC DOB BIN: 2000973, 2000974
Block: 2340 Lots: 56, 58

CONSTRUCTION PLAN CELLAR

Date: 5-29-15
Scale: As Noted
Project No.: 14-165
Drawing By: RF
Checked By: MM

REGISTERED ARCHITECT MICHAEL MUROFF No. 015011 STATE OF NEW YORK

A-100.00

SHEET # 15 OF 31

©

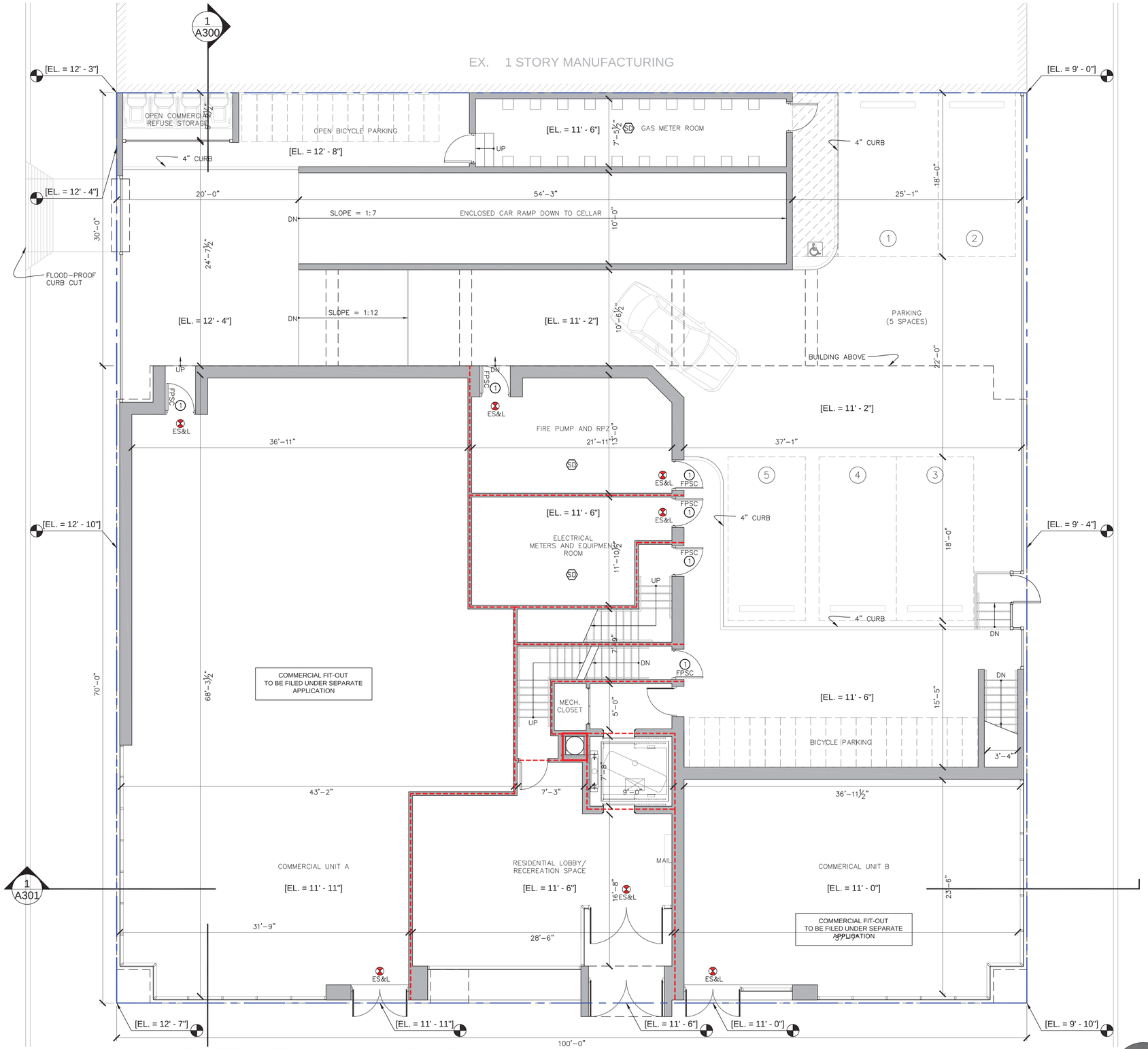

1 CONSTRUCTION PLAN - FLOOR 1

[EL = 11.5' PER NAVD88]

SCALE: 3/16" = 1'-0"

GRAPHICS LEGEND:

- 1 HOUR FIRE RATED PARTITION – REFER TO A–600
- 2 HOUR FIRE RATED PARTITION – REFER TO A–600
- 3 HOUR FIRE RATED PARTITION – REFER TO A–600
- # DOOR SCHEDULE
- MV 50 CFM MECHANICAL VENTILATION
- EXIT SIGN AND LIGHT – MAX. 5 WATTS PER SIDE
- SD HARD WIRED NYC COMPLIANT SMOKE AND CO DETECTOR
- B–1 KITCHEN / BATH TAG
- F.D. FLOOR DRAIN
- R.D. ROOF DRAIN
- OPEN TO BELOW
- ABOVE
- X'–XX" DIMENSION MARKER
- 3 A100 SECTION MARKER
- 3 A100 ELEVATION MARKER

FIREPROOF SELF CLOSING DOOR SCHEDULE:

DOOR #	WIDTH x HEIGHT	FIRE RATING	MATERIAL
1	3'–0" x 7'–0"	B LABEL 90 MIN.	HOLLOW METAL
2	3'–0" x 7'–0"	B LABEL 90 MIN.	APPROVED MDF

INTERIOR DOOR SCHEDULE:

DOOR #	WIDTH x HEIGHT	TYPE	MATERIAL
3	2'–10" x 7'–0"	BEDROOM/BATH	WOOD OR MDF
4	4'–0" x 7'–0"	DOUBLE CLOSET	WOOD OR MDF
5	3'–0" x 7'–0"	BEDROOM SLIDER	WOOD OR MDF

LIGHTING IN DWELLING UNITS: AS PER C405.1

DWELLING UNITS WITHIN COMMERCIAL BUILDINGS SHALL NOT BE REQUIRED TO COMPLY WITH SECTIONS C405.2 THROUGH C405.5 PROVIDED THAT A MINIMUM OF 75 PERCENT OF THE PERMANENT INSTALLED LIGHTING FIXTURES, OTHER THAT LOW–VOLTAGE LIGHTING, SHALL BE HIGH EFFICACY LAMPS.

75 PERCENT OF PERMANENT INSTALLED LIGHTING FIXTURES SHALL BE HIGH EFFICACY, THEREFORE COMPLIES.

INTERIOR LIGHTING POWER: AS PER C405.5.2

THE TOTAL INTERIOR LIGHTING POWER ALLOWANCE (WATTS) IS ACCORDING TO TABLE C405.5.2(1) USIING THE BUILDING AREA METHOD FOR ALL AREAS OF THE BUILDING COVERED IN THIS PERMIT. FOR THE BUILDING AREA METHOD, THE INTERIOR LIGHTING POWER ALLOWANCE IS THE FLOOR AREA FOR EACH BUILDING TYPE LISTED IN TABLE C405.5.2(1) TIMES THE VALUE FROM TABLE C405.5.2(1) FOR THAT AREA.

INTERIOR LIGHTING POWER ALLOWANCES: TABLES C405.5.2(1)

BUILDING AREA TYPE	ALLOWABLE WATTS/SQ.FT.	PRESCRIBED WATTS/SQ.FT.
RETAIL	1.5	1.5
MULTI–FAMILY	0.7	0.7

APPENDIX G - FLOOD RESISTANT CONSTRUCTION NOTES:

SEE NOTES ON A–100

REVISIONS

NO.	DESCRIPTIONS	DATE
1	DOB	5–29–15

NO.	TO WHOM ISSUED	DATE

ISSUES

Tahoe Development Group LLC
8217 153rd Avenue
Howard Beach, NY 11414
Owner
Anthony Gurino
718 835 4700

Michael Muroff Architect, LLC
333 Hudson Street, Suite 501
New York, NY 10013
Architect
Michael Muroff
646 230 7111

Structural Engineering Systems, PLLC
214–41 42nd Avenue, Suite 2B
Bayside, NY 11361
Structural Engineer
Joseph Gulino
718 224 7161

S. Schwartz Engineering, PLLC
15 West 39th Street, Suite PH
New York, NY 10018
MEP Engineer
Simon Schwartz
212 695 3509

THIS DRAWING IS AN INSTRUMENT OF SERVICE AND SHALL REMAIN THE PROPERTY OF MICHAEL MUROFF ARCHITECT,L.L.C. WHETHER THE PROJECT FOR WHICH IT IS MADE IS EXECUTED OR NOT. THIS DRAWING SHALL NOT BE USED BY THE OWNER OR OTHERS ON OTHER PROJECTS, FOR ADDITIONS TO THIS PROJECT OR FOR COMPLETION OF THIS PROJECT BY OTHERS EXCEPT BY AGREEMENT IN WRITING AND WITH APPROPRIATE COMPENSATION TO MICHAEL MUROFF ARCHITECT,L.L.C., THE ORIGINAL ARCHITECT, PROVIDED THAT FOR OTHER PURPOSES IN CONNECTION WITH THE PROJECT IS NOT TO BE CONSTRUED AS PUBLICATION IN DEROGATION OF THE RIGHTS OF MICHAEL MUROFF ARCHITECT,L.L.C., REPRODUCTION OR PUBLICATION BY ANY METHOD IN WHOLE OR IN PART IS PROHIBITED. TITLE TO THIS DRAWING BELONGS TO MICHAEL MUROFF ARCHITECT,L.L.C. WITHOUT PREJUDICE.

THE FIRM OF MICHAEL MUROFF ARCHITECT,L.L.C. HAS NOT BEEN RETAINED TO DO FIELD SUPERVISION OR INSPECTION. THE FIRM OF MICHAEL MUROFF ARCHITECT,L.L.C., ITS PRINCIPLES, EMPLOYEES, AND CONSULTANTS HAVE NOT BEEN RETAINED TO PROVIDE ANY SERVICES RELATED TO ASBESTOS, TOXIC WASTE, OR HAZARDOUS MATERIALS. THEIR REMOVAL, AMENDMENTS, OR ENCAPSULATING MUST BE PERFORMED BY OTHERS. IT IS ALSO NOT EXPECTED OR ANTICIPATED THAT ASBESTOS WILL BE DISCOVERED DURING WORK. MICHAEL MUROFF ARCHITECT,L.L.C. WILL NOT ACCEPT OR ASSUME ANY RESPONSIBILITY FOR ASBESTOS PROBLEMS. IF ASBESTOS CONTAMINANT OR REMOVAL PROGRAMS, THE OWNER OF THIS BUILDING HAS RETAINED AN INDEPENDENT ASBESTOS CONSULTANT. ALL INQUIRIES SHOULD BE DIRECTED TO THE OWNER OR HIS ASBESTOS CONSULTANT. IT IS A VIOLATION OF THE PROFESSIONAL LICENSE LAW FOR ANY PERSON TO ALTER THIS DRAWING IN ANY WAY, UNLESS ACTING UNDER THE DIRECTION OF A REGISTERED ARCHITECT. THE ALTERING ARCHITECT SHALL AFFIX HIS SEAL AND THE NOTATION "ALTERED BY" FOLLOWED BY HIS SIGNATURE AND DATE OF ALTERATION AND A SPECIFIC DESCRIPTION OF THE ALTERATION.

Michael Muroff Architect, LLC
333 Hudson Street
Suite 501
New York, NY 10013
Tel: 646. 230. 7111
Fax: 646. 230. 7277
NY Licence #015011

225 EAST 138th STREET

NYC DOB BIN: 2000973, 2000974
Block: 2340 Lots: 56, 58

CONSTRUCTION PLAN
FIRST FLOOR

Date: 5–29–15
Scale: As Noted
Project No. : 14–165
Drawing By: RF
Checked By: MM

REGISTERED ARCHITECT MICHAEL MUROFF No. 015011 STATE OF NEW YORK

A–101.00

SHEET #16 OF 31

©

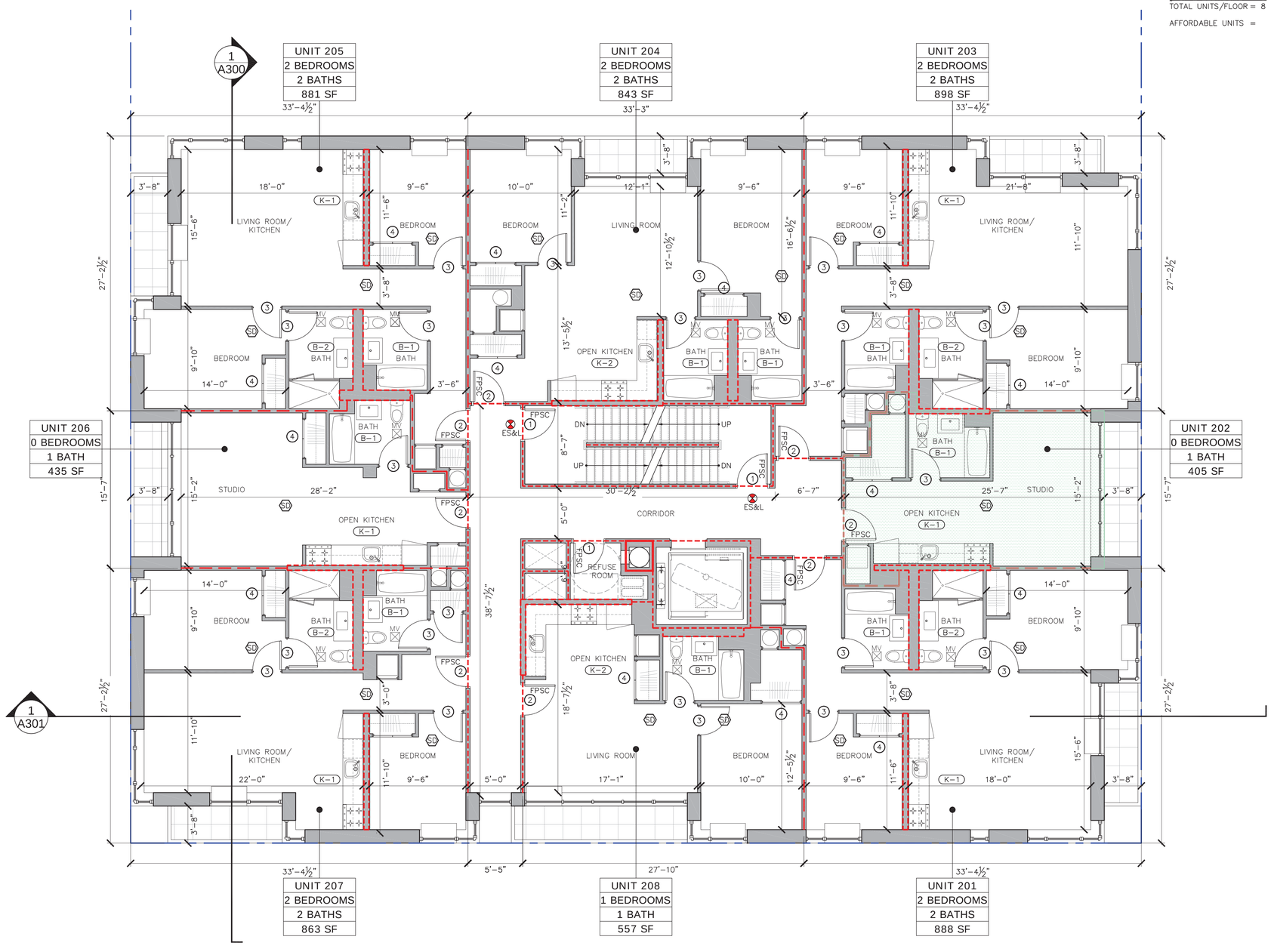

1 CONSTRUCTION PLAN – FLOOR 2

[EL = 23.5' PER NAVD88]

SCALE: 3/16" = 1'-0"

UNIT SUMMARY:

OF 0 BEDROOMS = 2
OF 1 BEDROOMS = 1
OF 2 BEDROOMS = 5
TOTAL UNITS/FLOOR = 8

AFFORDABLE UNITS =

GRAPHICS LEGEND:

- 1 HOUR FIRE RATED PARTITION – REFER TO A–600
- 2 HOUR FIRE RATED PARTITION – REFER TO A–600
- 3 HOUR FIRE RATED PARTITION – REFER TO A–600
- # DOOR SCHEDULE
- MV 50 CFM MECHANICAL VENTILATION
- EXIT SIGN AND LIGHT – MAX. 5 WATTS PER SIDE
- SD HARD WIRED NYC COMPLIANT SMOKE AND CO DETECTOR
- B–1 KITCHEN / BATH TAG
- F.D. FLOOR DRAIN
- R.D. ROOF DRAIN
- OPEN TO BELOW
- ABOVE
- X'–XX" DIMENSION MARKER
- 3 A100 SECTION MARKER
- 3 A100 ELEVATION MARKER

FIREPROOF SELF CLOSING DOOR SCHEDULE:

DOOR #	WIDTH x HEIGHT	FIRE RATING	MATERIAL
1	3'–0" x 7'–0"	B LABEL 90 MIN.	HOLLOW METAL
2	3'–0" x 7'–0"	B LABEL 90 MIN.	APPROVED MDF

INTERIOR DOOR SCHEDULE:

DOOR #	WIDTH x HEIGHT	TYPE	MATERIAL
3	2'–10" x 7'–0"	BEDROOM/BATH	WOOD OR MDF
4	4'–0" x 7'–0"	DOUBLE CLOSET	WOOD OR MDF
5	3'–0" x 7'–0"	BEDROOM SLIDER	WOOD OR MDF

LIGHTING IN DWELLING UNITS: AS PER C405.1

DWELLING UNITS WITHIN COMMERCIAL BUILDINGS SHALL NOT BE REQUIRED TO COMPLY WITH SECTIONS C405.2 THROUGH C405.5 PROVIDED THAT A MINIMUM OF 75 PERCENT OF THE PERMANENT INSTALLED LIGHTING FIXTURES, OTHER THAT LOW–VOLTAGE LIGHTING, SHALL BE HIGH EFFICACY LAMPS.

75 PERCENT OF PERMANENT INSTALLED LIGHTING FIXTURES SHALL BE HIGH EFFICACY, THEREFORE COMPLIES.

INTERIOR LIGHTING POWER: AS PER C405.5.2

THE TOTAL INTERIOR LIGHTING POWER ALLOWANCE (WATTS) IS ACCORDING TO TABLE C405.5.2(1) USIING THE BUILDING AREA METHOD FOR ALL AREAS OF THE BUILDING COVERED IN THIS PERMIT. FOR THE BUILDING AREA METHOD, THE INTERIOR LIGHTING POWER ALLOWANCE IS THE FLOOR AREA FOR EACH BUILDING TYPE LISTED IN TABLE C405.5.2(1) TIMES THE VALUE FROM TABLE C405.5.2(1) FOR THAT AREA.

INTERIOR LIGHTING POWER ALLOWANCES: TABLES C405.5.2(1)

BUILDING AREA TYPE	ALLOWABLE WATTS/SQ.FT.	PRESCRIBED WATTS/SQ.FT.
RETAIL	1.5	1.5
MULTI–FAMILY	0.7	0.7

MINIMUM UNIT SIZE COMPLIANCE:

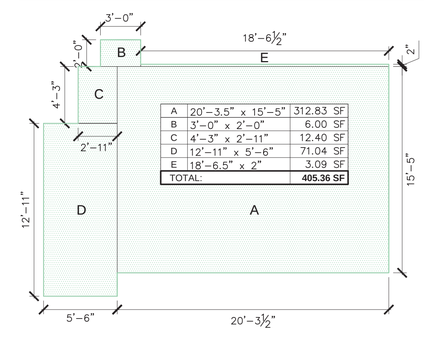

A	20'–3.5" x 15'–5"	312.83 SF
B	3'–0" x 2'–0"	6.00 SF
C	4'–3" x 2'–11"	12.40 SF
D	12'–11" x 5'–6"	71.04 SF
E	18'–6.5" x 2"	3.09 SF
TOTAL:		**405.36 SF**

REVISIONS

NO.	DESCRIPTIONS	DATE

NO.	TO WHOM ISSUED	DATE
1	DOB	5–29–15

ISSUES

Tahoe Development Group LLC
8217 153rd Avenue
Howard Beach, NY 11414
Owner
Anthony Gurino
718 835 4700

Michael Muroff Architect, LLC
333 Hudson Street, Suite 501
New York, NY 10013
Architect
Michael Muroff
646 230 7111

Structural Engineering Systems, PLLC
214–41 42nd Avenue, Suite 2B
Bayside, NY 11361
Structural Engineer
Joseph Gulino
718 224 7161

S. Schwartz Engineering, PLLC
15 West 39th Street, Suite PH
New York, NY 10018
MEP Engineer
Simon Schwartz
212 695 3509

THIS DRAWING IS AN INSTRUMENT OF SERVICE AND SHALL REMAIN THE PROPERTY OF MICHAEL MUROFF ARCHITECT,L.L.C., WHETHER THE PROJECT FOR WHICH IT IS MADE IS EXECUTED OR NOT. THIS DRAWING SHALL NOT BE USED BY THE OWNER OR OTHERS ON OTHER PROJECTS, FOR ADDITIONS TO THIS PROJECT OR FOR COMPLETION OF THIS PROJECT BY OTHERS EXCEPT BY AGREEMENT IN WRITING AND WITH APPROPRIATE COMPENSATION TO MICHAEL MUROFF ARCHITECT,L.L.C., THE REUSE OF THIS DRAWING BY THE OWNER FOR OTHER PURPOSES IN CONNECTION WITH THE PROJECT IS NOT TO BE CONSTRUED AS PUBLICATION IN DEROGATION OF THE RIGHTS OF MICHAEL MUROFF ARCHITECT,L.L.C.. REPRODUCTION OR PUBLICATION BY ANY METHOD IN WHOLE OR IN PART IS PROHIBITED. TITLE TO THIS DRAWING BELONGS TO MICHAEL MUROFF ARCHITECT,L.L.C. WITHOUT PREJUDICE.

THE FIRM OF MICHAEL MUROFF ARCHITECT,L.L.C., HAS NOT BEEN RETAINED TO DO FIELD SUPERVISION OR INSPECTION. THE FIRM OF MICHAEL MUROFF ARCHITECT,L.L.C., ITS PRINCIPALS, EMPLOYEES, AND CONSULTANTS HAVE NOT BEEN RETAINED TO PROVIDE ANY SERVICES RELATED TO ASBESTOS, TOXIC WASTE, OR HAZARDOUS MATERIALS, THEIR REMOVAL, ABATEMENTS, OR ENCAPSULATING. MICHAEL MUROFF ARCHITECT,L.L.C., IT AL DO NOT SPECIFY OR MAKE RECOMMENDATIONS RELATED TO ASBESTOS IN ANY FORM, ASBESTOS EXPOSURE ASSESSMENTS, APPROVALS, ASBESTOS HEALTH HAZARDS OR EXPOSURES, CORRECTIVE ACTION PROGRAMS, OR ASBESTOS MANAGEMENT PLANS. ALL ASBESTOS RELATED ISSUES SHOULD BE DIRECTED TO THE OWNER OR HIS ASBESTOS CONSULTANT. ALL INQUIRIES SHOULD BE DIRECTED TO THE OWNER OR HIS ASBESTOS CONSULTANT. IT IS A VIOLATION OF THE PROFESSIONAL LICENSE LAW FOR ANY PERSON TO ALTER THIS DRAWING IN ANY WAY, UNLESS ACTING UNDER THE DIRECTION OF A REGISTERED ARCHITECT. THE ALTERING ARCHITECT SHALL AFFIX HIS SEAL AND THE NOTATION "ALTERED BY" FOLLOWED BY HIS SIGNATURE AND DATE OF ALTERATION AND A SPECIFIC DESCRIPTION OF THE ALTERATION.

Michael Muroff Architect, LLC
333 Hudson Street
Suite 501
New York, NY 10013
Tel: 646. 230. 7111
Fax: 646. 230. 7277
NY Licence #015011

225 EAST 138th STREET

NYC DOB BIN: 2000973, 2000974
Block: 2340 Lots: 56, 58

CONSTRUCTION PLAN FLOOR 2

Date: 5–29–15
Scale: As Noted
Project No. : 14–165
Drawing By: RF
Checked By: MM

REGISTERED ARCHITECT MICHAEL MUROFF No. 015011 STATE OF NEW YORK

A–102.00

SHEET #17 OF 31

©

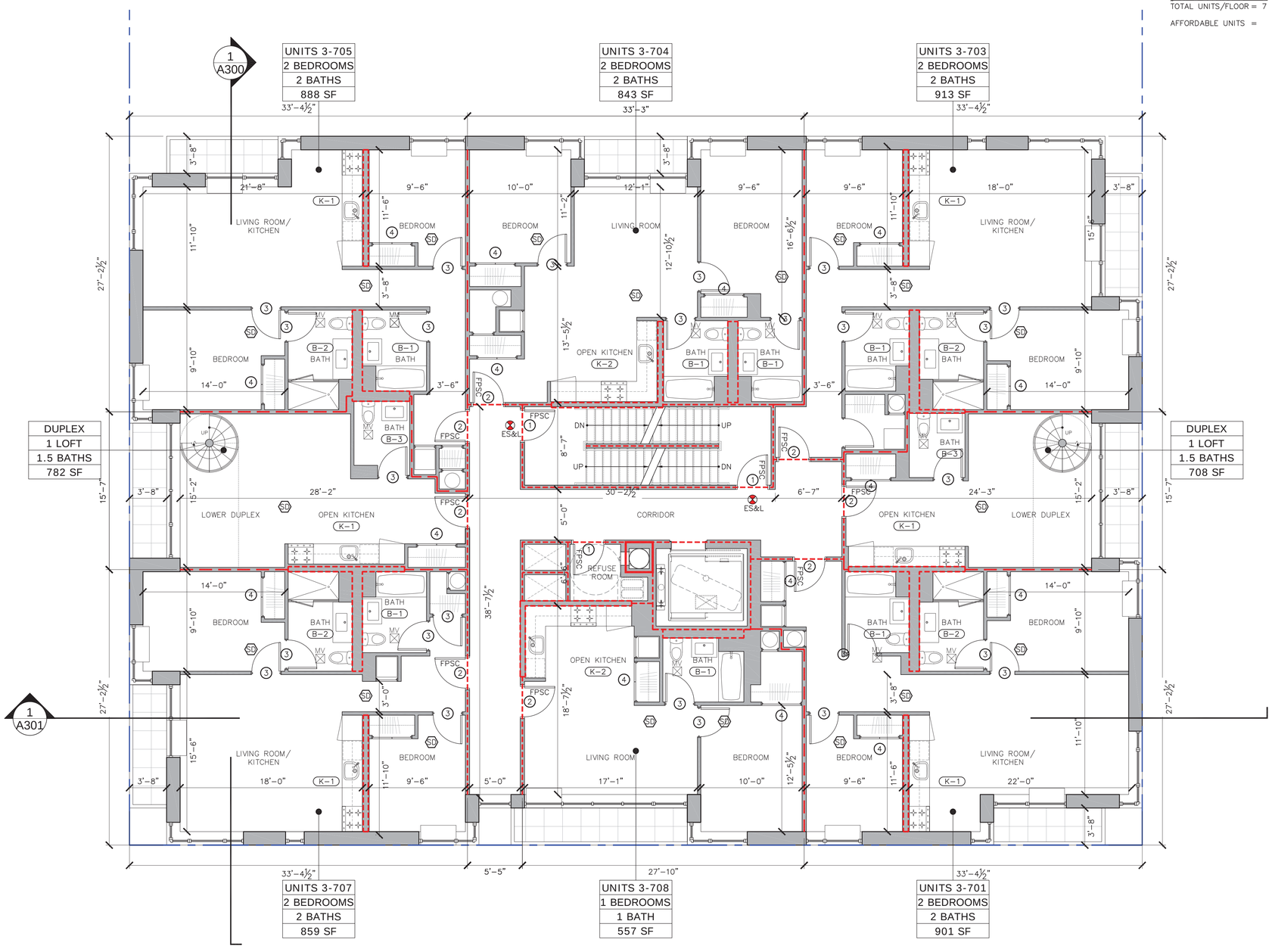

1 CONSTRUCTION PLAN – FLOORS 3,5,7

[EL = 33.5', 53.5', 73.5' PER NAVD88]

SCALE: 3/16" = 1'-0"

UNIT SUMMARY:

OF DUPLEXES = 2 HALVES
OF 1 BEDROOMS = 1
OF 2 BEDROOMS = 5
TOTAL UNITS/FLOOR = 7

AFFORDABLE UNITS =

GRAPHICS LEGEND:

- 1 HOUR FIRE RATED PARTITION – REFER TO A-600
- 2 HOUR FIRE RATED PARTITION – REFER TO A-600
- 3 HOUR FIRE RATED PARTITION – REFER TO A-600
- # DOOR SCHEDULE
- MV 50 CFM MECHANICAL VENTILATION
- EXIT SIGN AND LIGHT – MAX. 5 WATTS PER SIDE
- SD HARD WIRED NYC COMPLIANT SMOKE AND CO DETECTOR
- B-1 KITCHEN / BATH TAG
- F.D. FLOOR DRAIN
- R.D. ROOF DRAIN
- OPEN TO BELOW
- ABOVE
- X'-XX" DIMENSION MARKER
- 3 A100 SECTION MARKER
- 3 A100 ELEVATION MARKER

FIREPROOF SELF CLOSING DOOR SCHEDULE:

DOOR #	WIDTH x HEIGHT	FIRE RATING	MATERIAL
1	3'-0" x 7'-0"	B LABEL 90 MIN.	HOLLOW METAL
2	3'-0" x 7'-0"	B LABEL 90 MIN.	APPROVED MDF

INTERIOR DOOR SCHEDULE:

DOOR #	WIDTH x HEIGHT	TYPE	MATERIAL
3	2'-10" x 7'-0"	BEDROOM/BATH	WOOD OR MDF
4	4'-0" x 7'-0"	DOUBLE CLOSET	WOOD OR MDF
5	3'-0" x 7'-0"	BEDROOM SLIDER	WOOD OR MDF

LIGHTING IN DWELLING UNITS:

AS PER C405.1

DWELLING UNITS WITHIN COMMERCIAL BUILDINGS SHALL NOT BE REQUIRED TO COMPLY WITH SECTIONS C405.2 THROUGH C405.5 PROVIDED THAT A MINIMUM OF 75 PERCENT OF THE PERMANENT INSTALLED LIGHTING FIXTURES, OTHER THAT LOW-VOLTAGE LIGHTING, SHALL BE HIGH EFFICACY LAMPS.

75 PERCENT OF PERMANENT INSTALLED LIGHTING FIXTURES SHALL BE HIGH EFFICACY, THEREFORE COMPLIES.

INTERIOR LIGHTING POWER:

AS PER C405.5.2

THE TOTAL INTERIOR LIGHTING POWER ALLOWANCE (WATTS) IS ACCORDING TO TABLE C405.5.2(1) USIING THE BUILDING AREA METHOD FOR ALL AREAS OF THE BUILDING COVERED IN THIS PERMIT. FOR THE BUILDING AREA METHOD, THE INTERIOR LIGHTING POWER ALLOWANCE IS THE FLOOR AREA FOR EACH BUILDING TYPE LISTED IN TABLE C405.5.2(1) TIMES THE VALUE FROM TABLE C405.5.2(1) FOR THAT AREA.

INTERIOR LIGHTING POWER ALLOWANCES:

TABLES C405.5.2(1)

BUILDING AREA TYPE	ALLOWABLE WATTS/SQ.FT.	PRESCRIBED WATTS/SQ.FT.
RETAIL	1.5	1.5
MULTI-FAMILY	0.7	0.7

REVISIONS		
NO.	DESCRIPTIONS	DATE
1	DOB	5-29-15
NO.	TO WHOM ISSUED	DATE
	ISSUES	

Tahoe Development Group LLC
8217 153rd Avenue
Howard Beach, NY 11414
Owner
Anthony Gurino
718 835 4700

Michael Muroff Architect, LLC
333 Hudson Street, Suite 501
New York, NY 10013
Architect
Michael Muroff
646 230 7111

Structural Engineering Systems, PLLC
214-41 42nd Avenue, Suite 2B
Bayside, NY 11361
Structural Engineer
Joseph Gulino
718 224 7161

S. Schwartz Engineering, PLLC
15 West 39th Street, Suite PH
New York, NY 10018
MEP Engineer
Simon Schwartz
212 695 3509

THIS DRAWING IS AN INSTRUMENT OF SERVICE AND SHALL REMAIN THE PROPERTY OF MICHAEL MUROFF ARCHITECT,L.L.C., WHETHER THE PROJECT FOR WHICH IT IS MADE IS EXECUTED OR NOT. THIS DRAWING SHALL NOT BE USED BY THE OWNER OR OTHERS ON OTHER PROJECTS, FOR ADDITIONS TO THIS PROJECT, OR FOR COMPLETING THIS PROJECT BY OTHERS EXCEPT AS AGREED TO IN WRITING WITH MICHAEL MUROFF ARCHITECT,L.L.C. SUBMISSION OR DISTRIBUTION TO MEET OFFICIAL REGULATORY REQUIREMENTS OR FOR OTHER PURPOSES IN CONNECTION WITH THE PROJECT IS NOT TO BE CONSTRUED AS PUBLICATION IN DEROGATION OF THE RIGHTS OF MICHAEL MUROFF ARCHITECT,L.L.C. REPRODUCTION OR PUBLICATION BY ANY METHOD IN WHOLE OR IN PART IS PROHIBITED. TITLE TO THIS DRAWING BELONGS TO MICHAEL MUROFF ARCHITECT,L.L.C. WITHOUT PREJUDICE.

THE FIRM OF MICHAEL MUROFF ARCHITECT,L.L.C. HAS NOT BEEN RETAINED TO DO FIELD SUPERVISION OR INSPECTION. THE FIRM OF MICHAEL MUROFF ARCHITECT,L.L.C., IT'S PRINCIPLES, EMPLOYEES, AND CONSULTANTS HAVE NOT BEEN RETAINED TO PROVIDE ANY FORM OF ADVICE, PROPOSAL, INSPECTION OR SUPERVISION REGARDING COMMUNAL AIR MONITORING, INDOOR/OUTDOOR AIR MONITORING, ASBESTOS EXPOSURE ASSESSMENTS, APPRAISALS ASBESTOS HEALTH HAZARDS OR EXPOSURE, CORRECTIVE ACTION PROGRAMS, OR ASBESTOS CONTAMINANT OR REMOVAL PROGRAMS. THE OWNER OF THIS BUILDING HAS RETAINED AN INDEPENDENT ASBESTOS CONSULTANT. ALL INQUIRIES SHOULD BE DIRECTED TO THE OWNER OR HIS ASBESTOS CONSULTANT. IT IS A VIOLATION OF THE ARCHITECTURE LAW OF THE STATE OF NEW YORK FOR ANY PERSON, UNLESS ACTING UNDER THE DIRECTION OF A REGISTERED ARCHITECT, THE ALTERING ARCHITECT SHALL AFFIX HIS SEAL AND THE NOTATION "ALTERED BY" FOLLOWED BY HIS SIGNATURE AND DATE OF ALTERATION AND A SPECIFIC DESCRIPTION OF THE ALTERATION.

Michael Muroff Architect, LLC
333 Hudson Street
Suite 501
New York, NY 10013
Tel: 646. 230. 7111
Fax: 646. 230. 7277
NY Licence #015011

225 EAST 138th STREET

NYC DOB BIN: 2000973, 2000974
Block: 2340 Lots: 56, 58

CONSTRUCTION PLAN
FLOORS 3,5,7

Date: 5-29-15
Scale: As Noted
Project No. : 14-165
Drawing By: RF
Checked By: MM

REGISTERED ARCHITECT MICHAEL MUROFF No. 015011 STATE OF NEW YORK

A-103.00

SHEET #18 OF 31

©

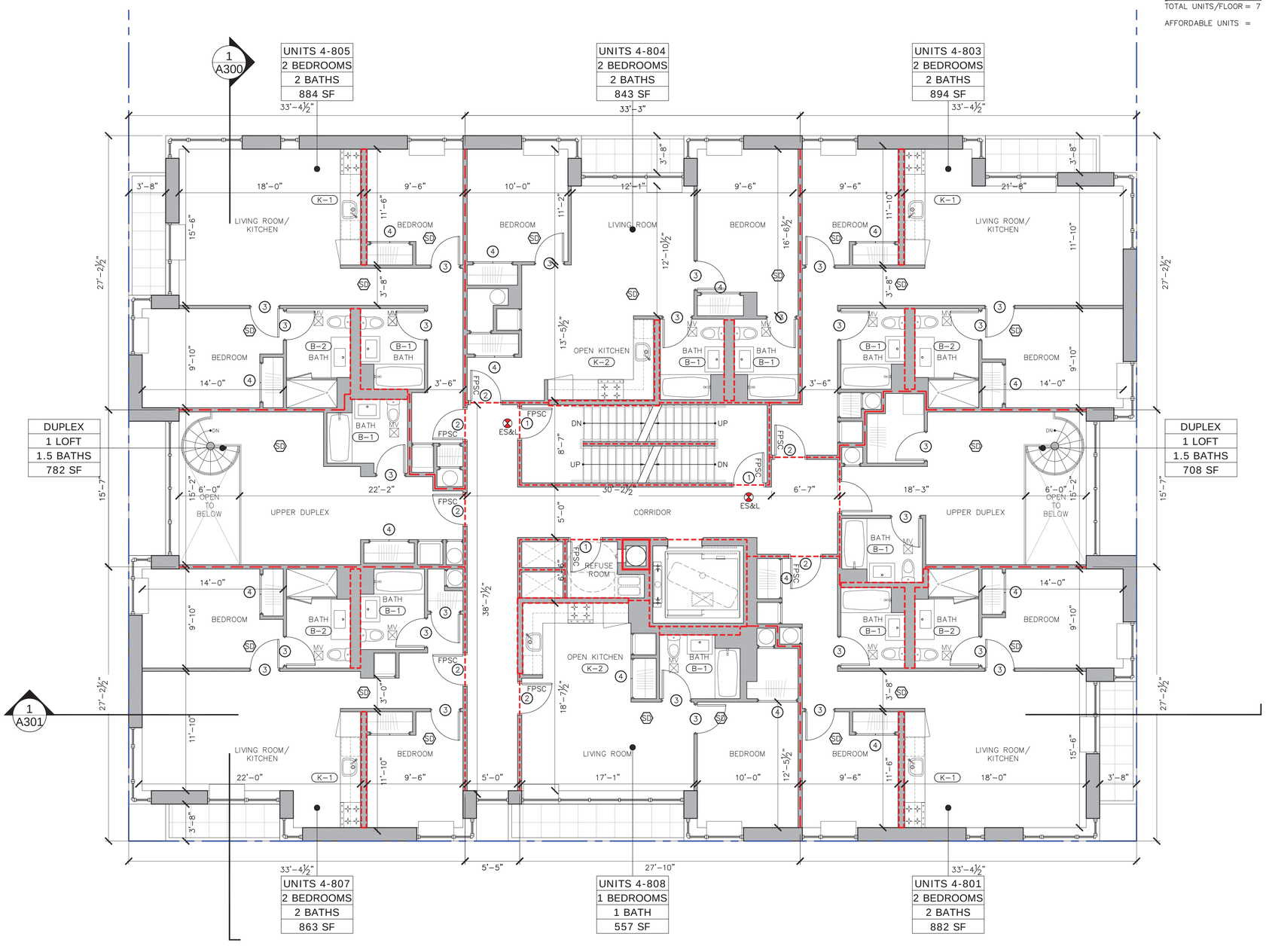

1 CONSTRUCTION PLAN – FLOORS 4,6,8

[EL = 43.5', 63.5', 83.5' PER NAVD88]

SCALE: 3/16" = 1'-0"

UNIT SUMMARY:

OF DUPLEXES = 2 HALVES
OF 1 BEDROOMS = 1
OF 2 BEDROOMS = 5
TOTAL UNITS/FLOOR = 7

AFFORDABLE UNITS =

GRAPHICS LEGEND:

- 1 HOUR FIRE RATED PARTITION – REFER TO A-600
- 2 HOUR FIRE RATED PARTITION – REFER TO A-600
- 3 HOUR FIRE RATED PARTITION – REFER TO A-600
- # DOOR SCHEDULE
- MV 50 CFM MECHANICAL VENTILATION
- EXIT SIGN AND LIGHT – MAX. 5 WATTS PER SIDE
- SD HARD WIRED NYC COMPLIANT SMOKE AND CO DETECTOR
- B-1 KITCHEN / BATH TAG
- F.D. FLOOR DRAIN
- R.D. ROOF DRAIN
- OPEN TO BELOW
- ABOVE
- X'-XX" DIMENSION MARKER
- 3 A100 SECTION MARKER
- 3 A100 ELEVATION MARKER

FIREPROOF SELF CLOSING DOOR SCHEDULE:

DOOR #	WIDTH x HEIGHT	FIRE RATING	MATERIAL
1	3'-0" x 7'-0"	B LABEL 90 MIN.	HOLLOW METAL
2	3'-0" x 7'-0"	B LABEL 90 MIN.	APPROVED MDF

INTERIOR DOOR SCHEDULE:

DOOR #	WIDTH x HEIGHT	TYPE	MATERIAL
3	2'-10" x 7'-0"	BEDROOM/BATH	WOOD OR MDF
4	4'-0" x 7'-0"	DOUBLE CLOSET	WOOD OR MDF
5	3'-0" x 7'-0"	BEDROOM SLIDER	WOOD OR MDF

LIGHTING IN DWELLING UNITS: AS PER C405.1

DWELLING UNITS WITHIN COMMERCIAL BUILDINGS SHALL NOT BE REQUIRED TO COMPLY WITH SECTIONS C405.2 THROUGH C405.5 PROVIDED THAT A MINIMUM OF 75 PERCENT OF THE PERMANENT INSTALLED LIGHTING FIXTURES, OTHER THAT LOW-VOLTAGE LIGHTING, SHALL BE HIGH EFFICACY LAMPS.

75 PERCENT OF PERMANENT INSTALLED LIGHTING FIXTURES SHALL BE HIGH EFFICACY, THEREFORE COMPLIES.

INTERIOR LIGHTING POWER: AS PER C405.5.2

THE TOTAL INTERIOR LIGHTING POWER ALLOWANCE (WATTS) IS ACCORDING TO TABLE C405.5.2(1) USIING THE BUILDING AREA METHOD FOR ALL AREAS OF THE BUILDING COVERED IN THIS PERMIT. FOR THE BUILDING AREA METHOD, THE INTERIOR LIGHTING POWER ALLOWANCE IS THE FLOOR AREA FOR EACH BUILDING TYPE LISTED IN TABLE C405.5.2(1) TIMES THE VALUE FROM TABLE C405.5.2(1) FOR THAT AREA.

INTERIOR LIGHTING POWER ALLOWANCES: TABLES C405.5.2(1)

BUILDING AREA TYPE	ALLOWABLE WATTS/SQ.FT.	PRESCRIBED WATTS/SQ.FT.
RETAIL	1.5	1.5
MULTI-FAMILY	0.7	0.7

APPENDIX G - FLOOD RESISTANT CONSTRUCTION NOTES:

REVISIONS

NO.	DESCRIPTIONS	DATE

NO.	TO WHOM ISSUED	DATE
1	DOB	5-29-15

ISSUES

Tahoe Development Group LLC — Owner
8217 153rd Avenue — Anthony Gurino
Howard Beach, NY 11414 — 718 835 4700

Michael Muroff Architect, LLC — Architect
333 Hudson Street, Suite 501 — Michael Muroff
New York, NY 10013 — 646 230 7111

Structural Engineering Systems, PLLC — Structural Engineer
214-41 42nd Avenue, Suite 2B — Joseph Gulino
Bayside, NY 11361 — 718 224 7161

S. Schwartz Engineering, PLLC — MEP Engineer
15 West 39th Street, Suite PH — Simon Schwartz
New York, NY 10018 — 212 695 3509

THIS DRAWING IS AN INSTRUMENT OF SERVICE AND SHALL REMAIN THE PROPERTY OF MICHAEL MUROFF ARCHITECT,L.L.C. WHETHER THE PROJECT FOR WHICH IT IS MADE IS EXECUTED OR NOT. THIS DRAWING SHALL NOT BE USED BY THE OWNER OR OTHERS ON OTHER PROJECTS, FOR ADDITIONS TO THIS PROJECT OR FOR COMPLETION OF THIS PROJECT BY OTHERS EXCEPT BY AGREEMENT IN WRITING AND WITH APPROPRIATE COMPENSATION TO MICHAEL MUROFF ARCHITECT,L.L.C. THIS DRAWING SHALL NOT BE REPRODUCED OR PUBLISHED FOR OTHER PURPOSES, IN CONNECTION WITH THE PROJECT IS NOT TO BE CONSTRUED AS PUBLICATION IN DEROGATION OF THE RIGHTS OF MICHAEL MUROFF ARCHITECT,L.L.C. REPRODUCTION OR PUBLICATION BY ANY METHOD IN WHOLE OR IN PART IS PROHIBITED. TITLE TO THIS DRAWING BELONGS TO MICHAEL MUROFF ARCHITECT,L.L.C. WITHOUT PREJUDICE.

THE FIRM OF MICHAEL MUROFF ARCHITECT,L.L.C. HAS NOT BEEN RETAINED TO DO FIELD SUPERVISION OR INSPECTION. THE FIRM OF MICHAEL MUROFF ARCHITECT,L.L.C., ITS PRINCIPLES, EMPLOYEES, AND CONSULTANTS HAVE NOT BEEN RETAINED TO PROVIDE ANY SERVICES RELATED TO ASBESTOS, FOAM, WASTE, OR HAZARDOUS MATERIALS, THEIR REMOVAL, MAINTAINTS, OR ENCAPSULATING. THE OWNER HAS RETAINED AN ASBESTOS CONSULTANT TO PROVIDE ASBESTOS INVESTIGATION, ASBESTOS HAZARD ASSESSMENT, ASBESTOS EXPOSURE ASSESSMENTS, APPROVALS, ASBESTOS HEALTH HAZARDS OR EXPOSURE, CORRECTIVE ACTION PROGRAMS, OR ASBESTOS CONTAINMENT OR REMOVAL PROGRAMS. THE OWNER OF THIS BUILDING HAS RETAINED AN INDEPENDENT ASBESTOS CONSULTANT. ALL INQUIRIES SHOULD BE DIRECTED TO THE OWNER OR HIS ASBESTOS CONSULTANT. IT IS A VIOLATION OF THE PROFESSIONAL LICENSE LAW FOR ANY PERSON TO ALTER THIS DRAWING IN ANY WAY UNLESS ACTING UNDER THE DIRECTION OF A PROFESSIONAL ENGINEER OR ARCHITECT. THE ALTERING PERSON SHALL ATTACH A DESCRIPTION "ALTERED BY" FOLLOWED BY HIS SIGNATURE AND DATE OF ALTERATION AND A SPECIFIC DESCRIPTION OF THE ALTERATION.

Michael Muroff Architect, LLC
333 Hudson Street
Suite 501
New York, NY 10013
Tel: 646. 230. 7111
Fax: 646. 230. 7277
NY Licence #015011

225 EAST 138th STREET

NYC DOB BIN: 2000973, 2000974
Block: 2340 Lots: 56, 58

CONSTRUCTION PLAN
FLOORS 4,6,8

Date: 5-29-15
Scale: As Noted
Project No. : 14-165
Drawing By: RF
Checked By: MM

A-104.00

SHEET #19 OF 31

©

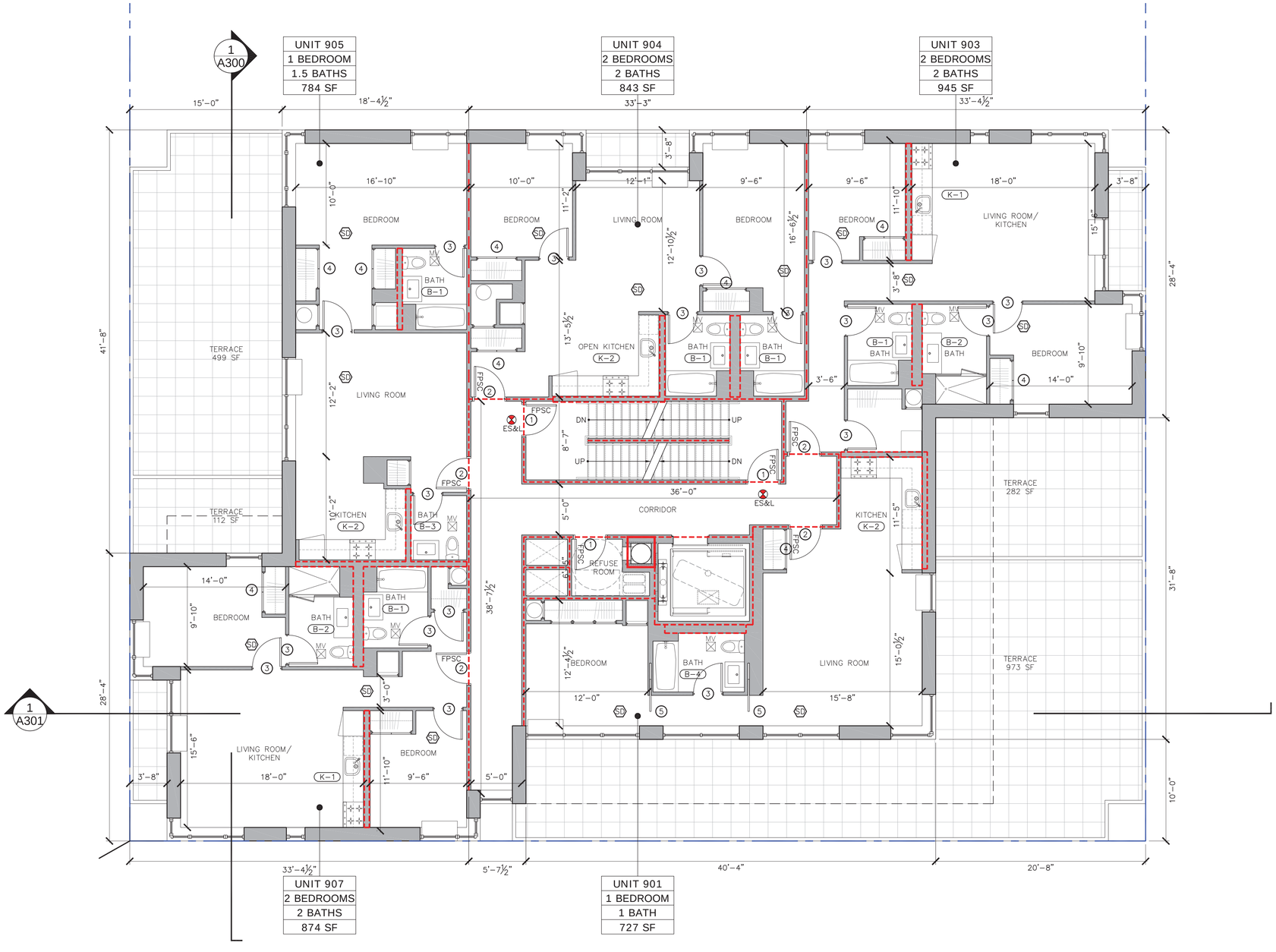

1 CONSTRUCTION PLAN – FLOOR 9

[EL = 93.5' PER NAVD88]

SCALE: 3/16" = 1'-0"

UNIT SUMMARY:

OF 1 BEDROOMS = 2
OF 2 BEDROOMS = 3
TOTAL UNITS/FLOOR = 5

GRAPHICS LEGEND:

- 1 HOUR FIRE RATED PARTITION – REFER TO A-600
- 2 HOUR FIRE RATED PARTITION – REFER TO A-600
- 3 HOUR FIRE RATED PARTITION – REFER TO A-600
- # DOOR SCHEDULE
- MV 50 CFM MECHANICAL VENTILATION
- EXIT SIGN AND LIGHT – MAX. 5 WATTS PER SIDE
- SD HARD WIRED NYC COMPLIANT SMOKE AND CO DETECTOR
- B-1 KITCHEN / BATH TAG
- F.D. FLOOR DRAIN
- R.D. ROOF DRAIN
- OPEN TO BELOW
- ABOVE
- X'-XX" DIMENSION MARKER
- 3 A100 SECTION MARKER
- 3 A100 ELEVATION MARKER

FIREPROOF SELF CLOSING DOOR SCHEDULE:

DOOR #	WIDTH x HEIGHT	FIRE RATING	MATERIAL
1	3'-0" x 7'-0"	B LABEL 90 MIN.	HOLLOW METAL
2	3'-0" x 7'-0"	B LABEL 90 MIN.	APPROVED MDF

INTERIOR DOOR SCHEDULE:

DOOR #	WIDTH x HEIGHT	TYPE	MATERIAL
3	2'-10" x 7'-0"	BEDROOM/BATH	WOOD OR MDF
4	4'-0" x 7'-0"	DOUBLE CLOSET	WOOD OR MDF
5	3'-0" x 7'-0"	BEDROOM SLIDER	WOOD OR MDF

LIGHTING IN DWELLING UNITS: AS PER C405.1

DWELLING UNITS WITHIN COMMERCIAL BUILDINGS SHALL NOT BE REQUIRED TO COMPLY WITH SECTIONS C405.2 THROUGH C405.5 PROVIDED THAT A MINIMUM OF 75 PERCENT OF THE PERMANENT INSTALLED LIGHTING FIXTURES, OTHER THAT LOW-VOLTAGE LIGHTING, SHALL BE HIGH EFFICACY LAMPS.

75 PERCENT OF PERMANENT INSTALLED LIGHTING FIXTURES SHALL BE HIGH EFFICACY, THEREFORE COMPLIES.

INTERIOR LIGHTING POWER: AS PER C405.5.2

THE TOTAL INTERIOR LIGHTING POWER ALLOWANCE (WATTS) IS ACCORDING TO TABLE C405.5.2(1) USIING THE BUILDING AREA METHOD FOR ALL AREAS OF THE BUILDING COVERED IN THIS PERMIT. FOR THE BUILDING AREA METHOD, THE INTERIOR LIGHTING POWER ALLOWANCE IS THE FLOOR AREA FOR EACH BUILDING TYPE LISTED IN TABLE C405.5.2(1) TIMES THE VALUE FROM TABLE C405.5.2(1) FOR THAT AREA.

INTERIOR LIGHTING POWER ALLOWANCES: TABLES C405.5.2(1)

BUILDING AREA TYPE	ALLOWABLE WATTS/SQ.FT.	PRESCRIBED WATTS/SQ.FT.
RETAIL	1.5	1.5
MULTI-FAMILY	0.7	0.7

REVISIONS

NO.	DESCRIPTIONS	DATE

NO.	TO WHOM ISSUED	DATE
1	DOB	5-29-15

ISSUES

Tahoe Development Group LLC
8217 153rd Avenue
Howard Beach, NY 11414
Owner
Anthony Gurino
718 835 4700

Michael Muroff Architect, LLC
333 Hudson Street, Suite 501
New York, NY 10013
Architect
Michael Muroff
646 230 7111

Structural Engineering Systems, PLLC
214-41 42nd Avenue, Suite 2B
Bayside, NY 11361
Structural Engineer
Joseph Gulino
718 224 7161

S. Schwartz Engineering, PLLC
15 West 39th Street, Suite PH
New York, NY 10018
MEP Engineer
Simon Schwartz
212 695 3509

THIS DRAWING IS AN INSTRUMENT OF SERVICE AND SHALL REMAIN THE PROPERTY OF MICHAEL MUROFF ARCHITECT,L.L.C. WHETHER THE PROJECT FOR WHICH IT IS MADE IS EXECUTED OR NOT. THIS DRAWING SHALL NOT BE USED BY THE OWNER OR OTHERS ON OTHER PROJECTS, FOR ADDITIONS TO THIS PROJECT OR FOR COMPLETION OF THIS PROJECT BY OTHERS EXCEPT BY AGREEMENT IN WRITING AND WITH APPROPRIATE COMPENSATION TO THE ARCHITECT. THE ARCHITECT IS NOT TO BE CONSTRUED AS PUBLICATION IN DEROGATION OF THE FOR OTHER PURPOSES, IN CONNECTION WITH THE PROJECT IS NOT TO BE CONSTRUED AS PUBLICATION IN DEROGATION OF THE RIGHTS OF MICHAEL MUROFF ARCHITECT,L.L.C. REPRODUCTION OR PUBLICATION BY ANY METHOD IN WHOLE OR IN PART IS PROHIBITED. TITLE TO THIS DRAWING BELONGS TO MICHAEL MUROFF ARCHITECT,L.L.C. WITHOUT PREJUDICE.

THE FIRM OF MICHAEL MUROFF ARCHITECT,L.L.C. HAS NOT BEEN RETAINED TO DO FIELD SUPERVISION OR INSPECTION. THE FIRM OF MICHAEL MUROFF ARCHITECT,L.L.C. ITS PRINCIPLES, EMPLOYEES, AND CONSULTANTS HAVE NOT BEEN RETAINED TO PROVIDE ANY SERVICES RELATED TO ASBESTOS, MOLD, WASTE, OR HAZARDOUS MATERIALS. THEIR REMOVAL, ABATEMENTS, OR ENCAPSULATING. THE ARCHITECT, ITS PRINCIPLES, EMPLOYEES, AND CONSULTANTS HAVE NOT BEEN RETAINED TO PROVIDE ANY SERVICES RELATED TO ASBESTOS EXPOSURE ASSESSMENTS, APPRAISALS, ASBESTOS HEALTH HAZARDS OR EXPOSURE, CORRECTIVE ACTION PROGRAMS, OR ASBESTOS CONTAINMENT OR REMOVAL PROGRAMS. THE OWNER OF THIS BUILDING HAS RETAINED AN INDEPENDENT ASBESTOS CONSULTANT. ALL INQUIRIES SHOULD BE DIRECTED TO THE OWNER OR HIS ASBESTOS CONSULTANT. IT IS A VIOLATION OF THE PROFESSIONAL LICENSE LAW FOR ANY PERSON TO ALTER THIS DRAWING IN ANY WAY, UNLESS ACTING UNDER THE DIRECTION OF A PROFESSIONAL ARCHITECT. ALTERATIONS MADE TO THIS DRAWING MUST BEAR THE NOTATION "ALTERED BY" FOLLOWED BY HIS SIGNATURE AND DATE OF ALTERATION AND A SPECIFIC DESCRIPTION OF THE ALTERATION.

Michael Muroff Architect, LLC
333 Hudson Street
Suite 501
New York, NY 10013
Tel: 646. 230. 7111
Fax: 646. 230. 7277
NY Licence #015011

225 EAST 138th STREET

NYC DOB BIN: 2000973, 2000974
Block: 2340 Lots: 56, 58

CONSTRUCTION PLAN
FLOOR 9

REGISTERED ARCHITECT MICHAEL MUROFF No. 015011 STATE OF NEW YORK

Date: 5-29-15
Scale: As Noted
Project No. : 14-165
Drawing By: RF
Checked By: MM

A-105.00

SHEET #20 OF 31

©

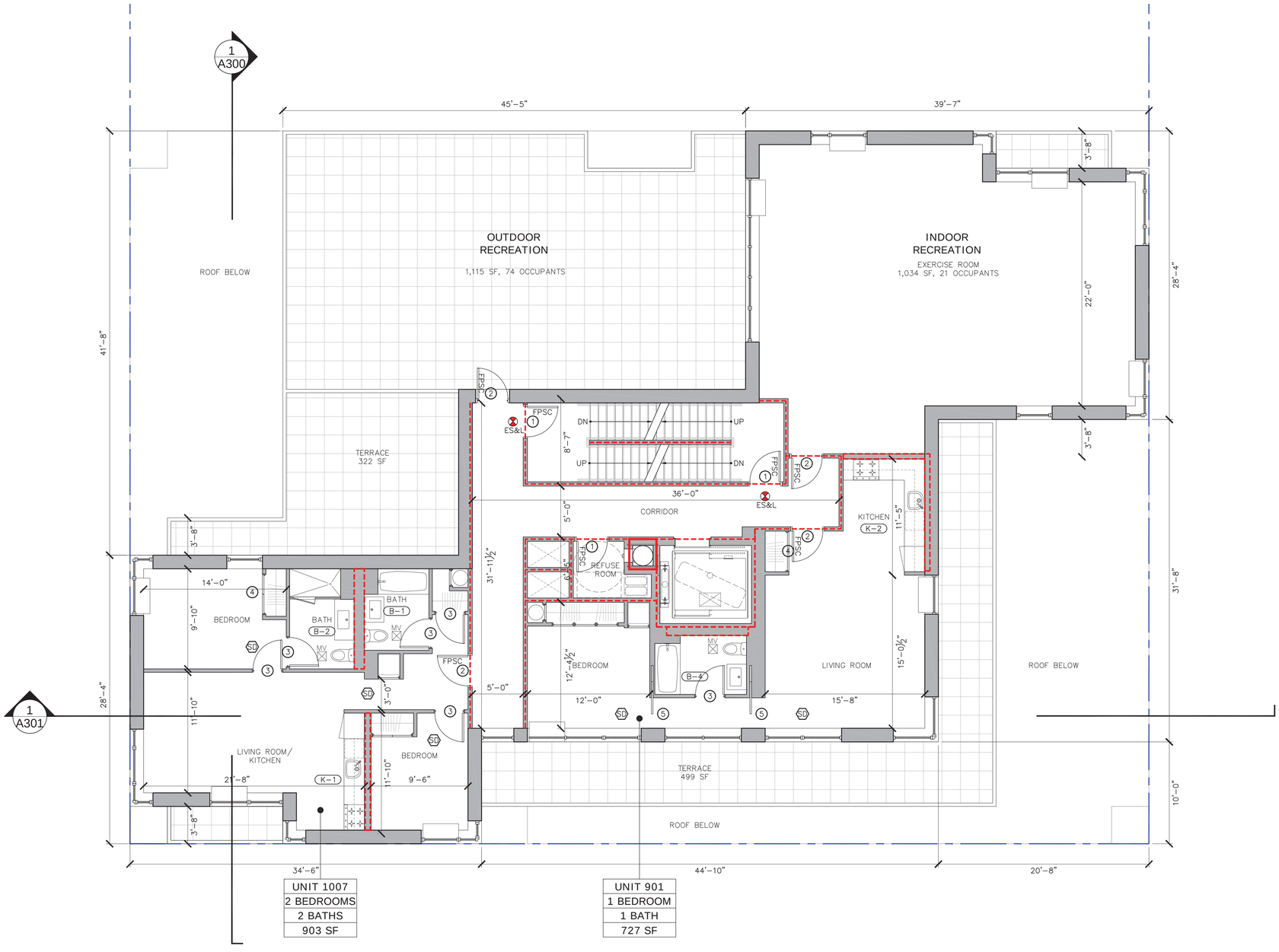

UNIT SUMMARY:

OF 1 BEDROOMS = 1
OF 2 BEDROOMS = 1
TOTAL UNITS/FLOOR = 2

GRAPHICS LEGEND:

- 1 HOUR FIRE RATED PARTITION – REFER TO A–600
- 2 HOUR FIRE RATED PARTITION – REFER TO A–600
- 3 HOUR FIRE RATED PARTITION – REFER TO A–600
- # DOOR SCHEDULE
- MV 50 CFM MECHANICAL VENTILATION
- EXIT SIGN AND LIGHT – MAX. 5 WATTS PER SIDE
- SD HARD WIRED NYC COMPLIANT SMOKE AND CO DETECTOR
- B–1 KITCHEN / BATH TAG
- F.D. FLOOR DRAIN
- R.D. ROOF DRAIN
- OPEN TO BELOW
- ABOVE
- X'–XX" DIMENSION MARKER
- 3 A100 SECTION MARKER
- 3 A100 ELEVATION MARKER

FIREPROOF SELF CLOSING DOOR SCHEDULE:

DOOR #	WIDTH x HEIGHT	FIRE RATING	MATERIAL
1	3'–0" x 7'–0"	B LABEL 90 MIN.	HOLLOW METAL
2	3'–0" x 7'–0"	B LABEL 90 MIN.	APPROVED MDF

INTERIOR DOOR SCHEDULE:

DOOR #	WIDTH x HEIGHT	TYPE	MATERIAL
3	2'–10" x 7'–0"	BEDROOM/BATH	WOOD OR MDF
4	4'–0" x 7'–0"	DOUBLE CLOSET	WOOD OR MDF
5	3'–0" x 7'–0"	BEDROOM SLIDER	WOOD OR MDF

LIGHTING IN DWELLING UNITS: AS PER C405.1

DWELLING UNITS WITHIN COMMERCIAL BUILDINGS SHALL NOT BE REQUIRED TO COMPLY WITH SECTIONS C405.2 THROUGH C405.5 PROVIDED THAT A MINIMUM OF 75 PERCENT OF THE PERMANENT INSTALLED LIGHTING FIXTURES, OTHER THAT LOW–VOLTAGE LIGHTING, SHALL BE HIGH EFFICACY LAMPS.

75 PERCENT OF PERMANENT INSTALLED LIGHTING FIXTURES SHALL BE HIGH EFFICACY, THEREFORE COMPLIES.

INTERIOR LIGHTING POWER: AS PER C405.5.2

THE TOTAL INTERIOR LIGHTING POWER ALLOWANCE (WATTS) IS ACCORDING TO TABLE C405.5.2(1) USIING THE BUILDING AREA METHOD FOR ALL AREAS OF THE BUILDING COVERED IN THIS PERMIT. FOR THE BUILDING AREA METHOD, THE INTERIOR LIGHTING POWER ALLOWANCE IS THE FLOOR AREA FOR EACH BUILDING TYPE LISTED IN TABLE C405.5.2(1) TIMES THE VALUE FROM TABLE C405.5.2(1) FOR THAT AREA.

INTERIOR LIGHTING POWER ALLOWANCES: TABLES C405.5.2(1)

BUILDING AREA TYPE	ALLOWABLE WATTS/SQ.FT.	PRESCRIBED WATTS/SQ.FT.
RETAIL	1.5	1.5
MULTI–FAMILY	0.7	0.7

EGRESS AND OCCUPANCY CALCULATIONS: AS PER BC 1004.1.1

USE AND AREA	LOAD AS PER 1004.1.1	OCCUPANCY
OUTDOOR REC. 1115 SF	15 GROSS	74 PERSONS
EXERCISE ROOM 1034 SF	50 GROSS	21 PERSONS
RESIDENTIAL 1645 SF	200 GROSS WI DUS	8 PERSONS
TOTAL		103 PERSONS

AS PER BC 1005.1, MIN REQUIRED EGRESS WIDTH = MAX. OCCUPANT LOAD
103 X .3" = 30.9" < 44" EGRESS PROVIDED, THEREFORE COMPLIES.
103 X .2" = 20.6" < 36" DOORWAY PROVIDED, THEREFORE COMPLIES.

REVISIONS

NO.	DESCRIPTIONS	DATE
1	DOB	5–29–15

NO.	TO WHOM ISSUED	DATE

ISSUES

Tahoe Development Group LLC — Owner
8217 153rd Avenue — Anthony Gurino
Howard Beach, NY 11414 — 718 835 4700

Michael Muroff Architect, LLC — Architect
333 Hudson Street, Suite 501 — Michael Muroff
New York, NY 10013 — 646 230 7111

Structural Engineering Systems, PLLC — Structural Engineer
214–41 42nd Avenue, Suite 2B — Joseph Gulino
Bayside, NY 11361 — 718 224 7161

S. Schwartz Engineering, PLLC — MEP Engineer
15 West 39th Street, Suite PH — Simon Schwartz
New York, NY 10018 — 212 695 3509

THIS DRAWING IS AN INSTRUMENT OF SERVICE AND SHALL REMAIN THE PROPERTY OF MICHAEL MUROFF ARCHITECT,L.L.C. WHETHER THE PROJECT FOR WHICH IT IS MADE IS EXECUTED OR NOT. THIS DRAWING SHALL NOT BE USED BY THE OWNER OR OTHERS ON OTHER PROJECTS, FOR ADDITIONS TO THIS PROJECT OR FOR COMPLETION OF THIS PROJECT BY OTHERS EXCEPT BY AGREEMENT IN WRITING WITH MICHAEL MUROFF ARCHITECT,L.L.C. SUBMISSION OR DISTRIBUTION TO MEET OFFICIAL REGULATORY REQUIREMENTS OR FOR OTHER PURPOSES IN CONNECTION WITH THE PROJECT IS NOT TO BE CONSTRUED AS PUBLICATION IN DEROGATION OF THE RIGHTS OF MICHAEL MUROFF ARCHITECT,L.L.C. WHICH MAY HAVE BEEN RESERVED BY THE ARCHITECT. REUSE OR IN PART OF PROHIBITED. TITLE TO THIS DRAWING BELONGS TO MICHAEL MUROFF ARCHITECT,L.L.C. WITHOUT PREJUDICE.

THE FIRM OF MICHAEL MUROFF ARCHITECT,L.L.C. HAS NOT BEEN RETAINED TO DO FIELD SUPERVISION OR INSPECTION, THE FIRM OF MICHAEL MUROFF ARCHITECT,L.L.C., ITS PRINCIPALS, EMPLOYEES, AND CONSULTANTS HAVE NOT BEEN RETAINED TO PROVIDE ANY SERVICES RELATED TO ASBESTOS, TOXIC WASTE, OR HAZARDOUS MATERIALS, THEIR REMOVAL, ABATEMENTS, OR ENCAPSULATING. MICHAEL MUROFF ARCHITECT,L.L.C., ET AL, DO NOT SPECIFY OR MAKE RECOMMENDATIONS RELATED TO ASBESTOS IN ANY FORM, ASBESTOS EXPOSURE ASSESSMENTS, APPRAISALS ASBESTOS HEALTH HAZARDS OR EXPOSURE, CORRECTIVE ACTION PROGRAMS, OR ASBESTOS MANAGEMENT PLANS. ALL ASBESTOS RELATED ISSUES SHOULD BE DIRECTED TO THE OWNER OR HIS ASBESTOS CONSULTANT. ALL INQUIRIES SHOULD BE DIRECTED TO THE OWNER OR HIS ASBESTOS CONSULTANT. IT IS A VIOLATION OF THE PROFESSIONAL LICENSE LAW FOR ANY PERSON TO ALTER THIS DRAWING IN ANY WAY, UNLESS ACTING UNDER THE DIRECTION OF A REGISTERED ARCHITECT. THE ALTERING ARCHITECT SHALL AFFIX HIS SEAL AND THE NOTATION "ALTERED BY" FOLLOWED BY HIS SIGNATURE AND DATE OF ALTERATION AND A SPECIFIC DESCRIPTION OF THE ALTERATION.

Michael Muroff Architect, LLC
333 Hudson Street
Suite 501
New York, NY 10013
Tel: 646. 230. 7111
Fax: 646. 230. 7277
NY Licence #015011

1 CONSTRUCTION PLAN – FLOOR 10

[EL = 103.5' PER NAVD88]

SCALE: 3/16" = 1'–0"

225 EAST 138th STREET

NYC DOB BIN: 2000973, 2000974
Block: 2340 Lots: 56, 58

CONSTRUCTION PLAN
FLOOR 10

REGISTERED ARCHITECT MICHAEL MUROFF No. 015011 STATE OF NEW YORK

Date: 5–29–15
Scale: As Noted
Project No. : 14–165
Drawing By: RF
Checked By: MM

A–106.00

SHEET #21 OF 31

©

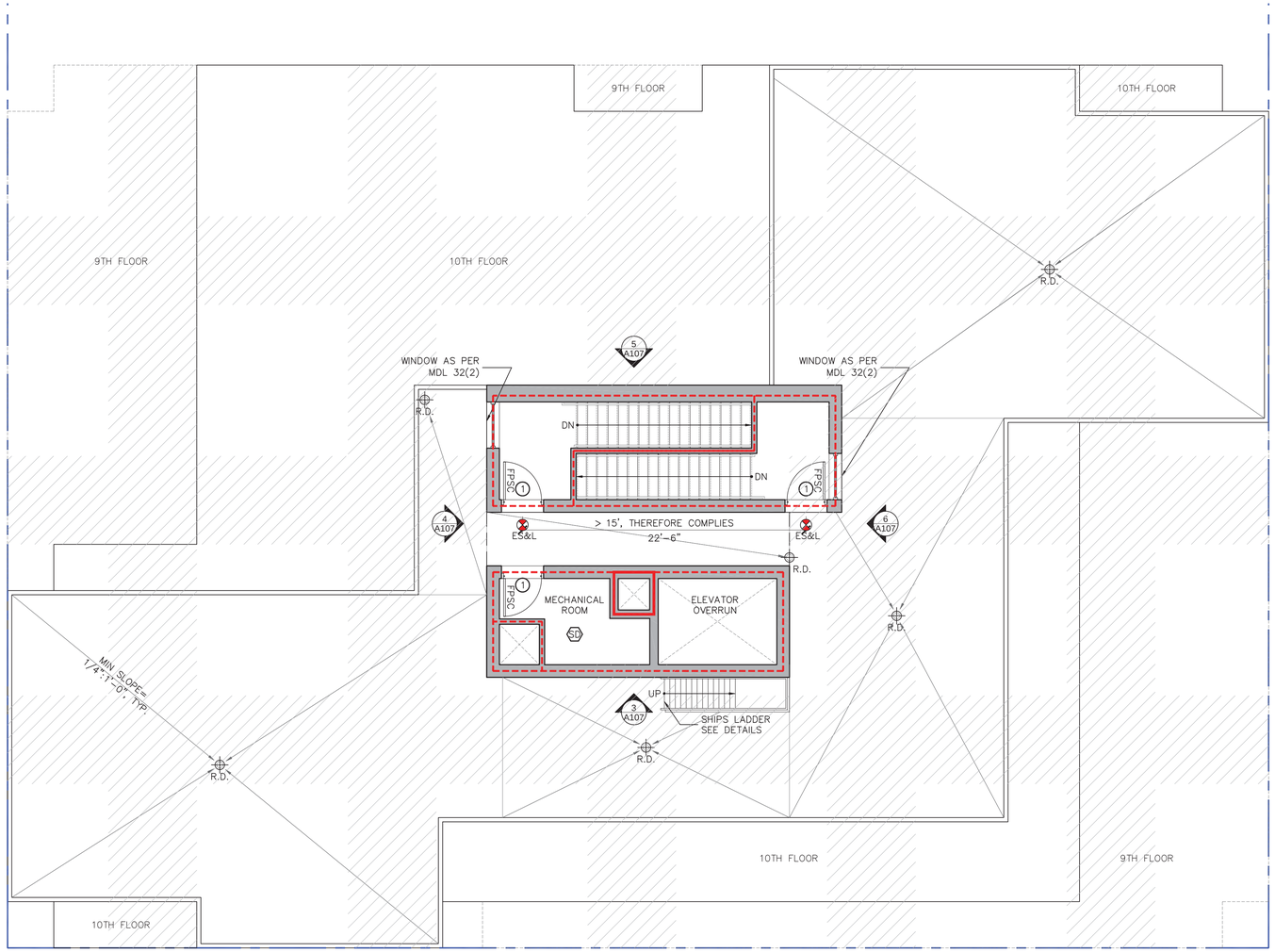

1 CONSTRUCTION PLAN - ROOF

[EL = 113.5' PER NAVD88]

SCALE: 3/16" = 1'-0"

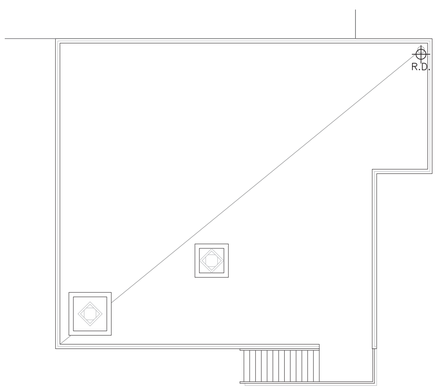

2 BULKHEAD ROOF PLAN

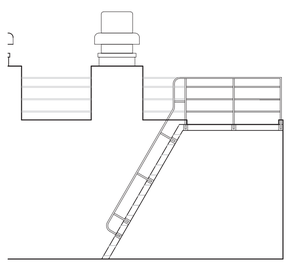

3 BH ELEVATION

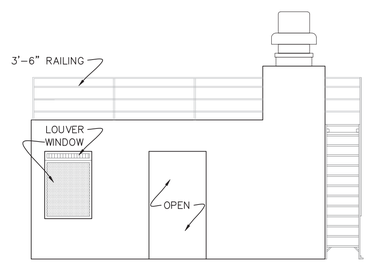

4 BH ELEVATION

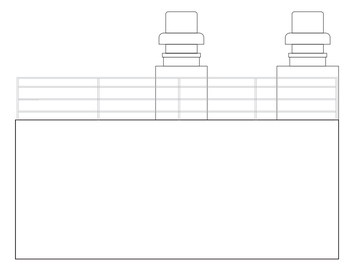

5 BH ELEVATION

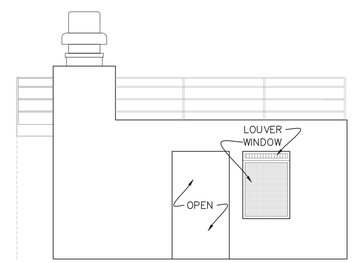

6 BH ELEVATION

GRAPHICS LEGEND:

REFER TO A-100

FIRE DEPARTMENT ACCESS

FDNY ROOF ACCESS NOTES:

504.4 ROOFTOP ACCESS AND OBSTRUCTIONS.
THE ROOFTOPS OF BUILDINGS 100 FEET (30 480 MM) OR LESS IN HEIGHT, SHALL BE MAINTAINED IN A MANNER THAT AVOIDS OR MINIMIZES OBSTRUCTIONS TO ACCESS FOR FIREFIGHTING OPERATIONS. FOR PURPOSES OF THIS SECTION ONLY, "ROOFTOP" SHALL INCLUDE ROOFTOPS OF BUILDING SETBACKS, AND "OBSTRUCTION" SHALL MEAN ANY FIXTURE OR OTHER ITEM THAT IS NOT READILY MOVABLE BY A PERSON WITHOUT THE USE OF TOOLS OR EQUIPMENT.

504.4.1 ROOFTOP ACCESS.
ACCESS TO BUILDING ROOFTOPS SHALL BE PROVIDED AS FOLLOWS:
1. FOR EACH 12 LINEAR FEET (3658 MM) OF BUILDING PERIMETER ACCESSIBLE FROM THE FRONTAGE SPACE OF THE BUILDING AND FROM ANY OTHER EXPOSURE ACCESSIBLE TO FIRE APPARATUS, A MINIMUM CLEARANCE OF 6 FEET (1829 MM) IN WIDTH AND 6 FEET (1829 MM) IN DEPTH FROM ANY OBSTRUCTION SHALL BE PROVIDED AT THE PARAPET WALL OR OTHER PERIMETER OF THE ROOFTOP.

2. A MINIMUM CLEARANCE OF 6 FEET (1829 MM) IN ALL DIRECTIONS SHALL BE PROVIDED FROM EACH DOOR OPENING ONTO A ROOFTOP FROM A DWELLING UNIT, STAIRWAY, BULKHEAD, OR OTHER OCCUPIED SPACE OR MEANS OF EGRESS, AS MEASURED FROM THE DOOR HINGE.

3. A MINIMUM CLEARANCE OF 3 FEET (914 MM) IN ALL DIRECTIONS SHALL BE PROVIDED FROM ANY FIRE ESCAPE OR ROOFTOP ACCESS LADDER, AS MEASURED FROM EACH SIDE OF THE LADDER OR LANDING.

504.4.2 ROOFTOP OBSTRUCTIONS.
UNOBSTRUCTED SPACE SHALL BE PROVIDED ON ROOFTOPS SUFFICIENT TO ALLOW FIREFIGHTING OPERATIONS, AS FOLLOWS:
1. A CLEAR PATH OF NOT LESS THAN 6 FEET (1829 MM) HORIZONTAL WIDTH AND 9 FEET (2743 MM) IN HEIGHT SHALL BE PROVIDED FROM THE FRONT OF THE BUILDING TO THE REAR OF THE BUILDING AND FROM ONE SIDE OF THE BUILDING TO THE OTHER, EXCEPT THAT A CONDUIT OR PIPE IN COMPLIANCE WITH THE REQUIREMENTS OF THIS SECTION MAY CROSS SUCH PATH. SUCH CLEAR PATH SHALL BE ACCESSIBLE FROM EACH POINT OF THE ROOFTOP ACCESS FROM WHICH CLEARANCE IS REQUIRED PURSUANT TO SECTION 504.4.1.

MDL38(2) NOTES:

WINDOWS AND SKYLIGHTS FOR PUBLIC HALLS AND STAIRS:

MINIMUM GLAZING = 20 SF
MINIMUM VENTILATION = 144 SI

IN LIEU OF A SKYLIGHT A WINDOW OF THE SAME AREA AS PRECRIBED IN SUBDIVISION ONE MAY BE PROVIDED. IF SUCH A WINDOW IS USED IN LIEU OF A SKYLIGHT, FIXED LOUVERS HAVING A MINIMUM OPENING OF FORTY SQUARE INCHES SHALL ALSO BE INSTALLED ON OR DIRECTLY ADJACENT TO SUCH WINDOW.

PROPOSED WINDOW AREA = 20 SF
PROPOSED WINDOW LOUVERS = 40 SI

SHIPS LADDER DETAILS:

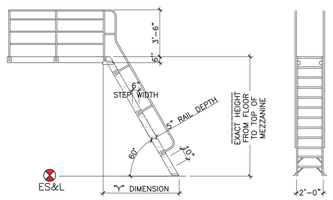

REVISIONS		
NO.	DESCRIPTIONS	DATE
1	DOB	5-29-15

NO.	TO WHOM ISSUED	DATE
	ISSUES	

Tahoe Development Group LLC
8217 153rd Avenue
Howard Beach, NY 11414
Owner
Anthony Gurino
718 835 4700

Michael Muroff Architect, LLC
333 Hudson Street, Suite 501
New York, NY 10013
Architect
Michael Muroff
646 230 7111

Structural Engineering Systems, PLLC
214-41 42nd Avenue, Suite 2B
Bayside, NY 11361
Structural Engineer
Joseph Gulino
718 224 7161

S. Schwartz Engineering, PLLC
15 West 39th Street, Suite PH
New York, NY 10018
MEP Engineer
Simon Schwartz
212 695 3509

THIS DRAWING IS AN INSTRUMENT OF SERVICE AND SHALL REMAIN THE PROPERTY OF MICHAEL MUROFF ARCHITECT,L.L.C. WHETHER THE PROJECT FOR WHICH IT IS PREPARED IS EXECUTED OR NOT. THE REUSE OF THIS DRAWING ON ANY OTHER PROJECT, FOR EXTENSIONS TO OTHER PROJECTS, FOR ADDITIONS TO THIS PROJECT OR FOR COMPLETION OF THIS PROJECT BY OTHERS EXCEPT BY AGREEMENT IN WRITING WITH MICHAEL MUROFF ARCHITECT,L.L.C., SUBMISSION OR DISTRIBUTION TO MEET OFFICIAL REGULATORY REQUIREMENTS OR FOR OTHER PURPOSES IN CONNECTION WITH THE PROJECT IS NOT TO BE CONSTRUED AS PUBLICATION IN DEROGATION OF THE RIGHTS OF MICHAEL MUROFF ARCHITECT,L.L.C. REPRODUCTION OR PUBLICATION BY ANY METHOD IN WHOLE OR IN PART IS PROHIBITED. TITLE TO THIS DRAWING BELONGS TO MICHAEL MUROFF ARCHITECT,L.L.C. WITHOUT PREJUDICE.

THE FIRM OF MICHAEL MUROFF ARCHITECT,L.L.C. HAS NOT BEEN RETAINED TO DO FIELD SUPERVISION OR INSPECTION. THE FIRM OF MICHAEL MUROFF ARCHITECT,L.L.C. DOES NOT SUPERVISE DOCUMENT OR PROCEDURE FOR SAFETY PRECAUTIONS AND PROGRAMS OR ANY SERVICES RELATED TO ASBESTOS, TOXIC WASTE OR HAZARDOUS MATERIALS, THEIR REMOVAL, ABATEMENTS, OR ENCAPSULATING. MICHAEL MUROFF ARCHITECT,L.L.C., ET AL. DO NOT SPECIFY OR MAKE RECOMMENDATIONS RELATED TO ASBESTOS IN ANY FORM. ASBESTOS EXPOSURE ASSESSMENTS, APPRAISALS ASBESTOS HEALTH HAZARDS OR EXPOSURE, CORRECTIVE ACTION PROGRAMS, OR ASBESTOS CONTAINMENT OR REMOVAL PROGRAMS. THE OWNER OF THIS BUILDING HAS RETAINED AN INDEPENDENT ASBESTOS CONSULTANT TO DO ASBESTOS SURVEY AND ASSESSMENT. THE ALTERING ARCHITECT SHALL AFFIX HIS SEAL AND THE NOTATION "ALTERED BY" FOLLOWED BY HIS PROFESSIONAL LICENSE LAW FOR ANY PERSON TO ALTER THIS DRAWING IN ANY WAY, UNLESS ACTING UNDER THE DIRECTION OF A REGISTERED ARCHITECT. THE ALTERING ARCHITECT SHALL AFFIX HIS SEAL AND THE NOTATION "ALTERED BY" FOLLOWED BY HIS SIGNATURE AND DATE OF ALTERATION AND A SPECIFIC DESCRIPTION OF THE ALTERATION.

Michael Muroff Architect, LLC
333 Hudson Street
Suite 501
New York, NY 10013
Tel: 646. 230. 7111
Fax: 646. 230. 7277
NY Licence #015011

225 EAST 138th STREET

NYC DOB BIN: 2000973, 2000974
Block: 2340 Lots: 56, 58

CONSTRUCTION PLAN
ROOF AND BULKHEAD

Date: 5-29-15
Scale: As Noted
Project No.: 14-165
Drawing By: RF
Checked By: MM

A-107.00

SHEET #22 OF 31

©

1 BUILDING ELEVATION – CANAL PLACE

SCALE: 1/8" = 1'-0"

2 BUILDING ELEVATION – 138th STREET

SCALE: 1/8" = 1'-0"

ENERGY CODE NOTES:

2. (AS PER C405.6) EXTERIOR LIGHTING (MANDATORY)
WHEN THE POWER FOR EXTERIOR LIGHTING IS SUPPLIED THROUGH THE ENERGY SERVICE TO THE BUILDING, ALL EXTERIOR LIGHTING, OTHER THAN LOW-VOLTAGE LANDSCAPE LIGHTING, SHALL COMPLY WITH SECTION C405.6.2

3. (AS PER C405.6.2) EXTERIOR BUILDING LIGHTING POWER.
THE TOTAL EXTERIOR LIGHTING POWER ALLOWANCE FOR ALL EXTERIOR BUILDING APPLICATIONS IS THE SUM OF THE BASE SITE ALLOWANCE PLUS THE INDIVIDUAL ALLOWANCES FOR AREAS THAT ARE TO BE ILLUMINATED AND ARE PERMITTED IN TABLE C405.6.2(2) FOR THE APPLICABLE LIGHTING ZONE. THE LIGHTING ZONES FOR THE BUILDING EXTERIOR IS DETERMINED BY FROM TABLE TABLE C405.6.2(1). EXTERIOR LIGHTING FOR ALL APPLICATIONS SHALL COMPLY WITH THE REQUIREMENTS OF SECTION C405.6.

EXTERIOR LIGHTING POWER ALLOWANCES

TABLES C405.6.2 (1)

BUILDING AREA TYPE	DESCRIPTION
2	AREAS PREDOMINANTLY CONSISTING OF RESIDENTIAL ZONING, NEIGHBORHOOD BUISNESS DISTRICTS, LIGHT INDUSTRIAL WITH LIMITED NIGHT-TIME USE AND RESIDENTIAL MIXED-USE AREAS.

INDIVIDUAL LIGHTING POWER ALLOWANCE FOR BUILDING EXTERIORS

TABLES C405.6.2 (2)

BASE SITE ALLOWANCE	ZONE 2	
	600 W	
TRADEABLE SURFACES	UNCOVERED PARKING AREA	0.06 W/FT²
	PARKING AREAS AND DRIVES	
	BUILDING ENTRANCES & EXITS	
	MAIN ENTRIES	20 W / LINEAR FT OF DOOR WIDTH
	OTHER DOORS	
	ENTRY CANOPIES	.25 W / SQUARE FOOT

REVISIONS

NO.	DESCRIPTIONS	DATE

1 BUILDING ELEVATION – RIDER AVENUE

SCALE: 1/8" = 1'-0"

2 BUILDING ELEVATION – REAR

SCALE: 1/8" = 1'-0"

REVISIONS		
NO.	DESCRIPTIONS	DATE
1	DOB	5-29-15

NO.	TO WHOM ISSUED	DATE
ISSUES		

Tahoe Development Group LLC
8217 153rd Avenue
Howard Beach, NY 11414
Owner
Anthony Gurino
718 835 4700

Michael Muroff Architect, LLC
333 Hudson Street, Suite 501
New York, NY 10013
Architect
Michael Muroff
646 230 7111

Structural Engineering Systems, PLLC
214-41 42nd Avenue, Suite 2B
Bayside, NY 11361
Structural Engineer
Joseph Gulino
718 224 7161

S. Schwartz Engineering, PLLC
15 West 39th Street, Suite PH
New York, NY 10018
MEP Engineer
Simon Schwartz
212 695 3509

THIS DRAWING IS AN INSTRUMENT OF SERVICE AND SHALL REMAIN THE PROPERTY OF MICHAEL MUROFF ARCHITECT,L.L.C., WHETHER THE PROJECT FOR WHICH IT IS MADE, IS EXECUTED OR NOT. THIS DRAWING SHALL NOT BE USED BY THE OWNER OR OTHERS ON OTHER PROJECTS, FOR ADDITIONS TO THIS PROJECT OR FOR COMPLETION OF THIS PROJECT BY OTHERS EXCEPT BY AGREEMENT IN WRITING AND WITH APPROPRIATE COMPENSATION TO MICHAEL MUROFF ARCHITECT,L.L.C., THE ARCHITECT. THIS DRAWING SHALL NOT BE USED FOR OTHER PURPOSES IN CONNECTION WITH THE PROJECT IS NOT TO BE CONSTRUED AS PUBLICATION IN DEROGATION OF THE RIGHTS OF MICHAEL MUROFF ARCHITECT,L.L.C.. REPRODUCTION OR PUBLICATION BY ANY METHOD IN WHOLE OR IN PART IS PROHIBITED. TITLE TO THIS DRAWING BELONGS TO MICHAEL MUROFF ARCHITECT,L.L.C.. WITHOUT PREJUDICE.

THE FIRM OF MICHAEL MUROFF ARCHITECT,L.L.C., HAS NOT BEEN RETAINED TO DO FIELD SUPERVISION OR INSPECTION. THE FIRM OF MICHAEL MUROFF ARCHITECT,L.L.C., ITS PRINCIPALS, EMPLOYEES, AND CONSULTANTS HAVE NOT BEEN RETAINED TO PROVIDE ANY SERVICES RELATED TO ASBESTOS, TOXIC WASTE, OR HAZARDOUS MATERIALS, THEIR REMOVAL, ABATEMENTS, OR ENCAPSULATING. THE OWNER HAS RETAINED AN INDEPENDENT ASBESTOS CONSULTANT TO PLAN, SUPERVISE, AND CONTROL ASBESTOS IN COMPLIANCE WITH MICHAEL MUROFF ARCHITECT,L.L.C. AND ALL APPLICABLE ASBESTOS HEALTH HAZARDS AND EXPOSURE CONTROL, ASBESTOS ABATEMENT, ASBESTOS CONTAINMENT OR REMOVAL PROGRAMS. THE OWNER OF THIS BUILDING HAS RETAINED AN INDEPENDENT ASBESTOS CONSULTANT. ALL INQUIRIES SHOULD BE DIRECTED TO THE OWNER OR HIS ASBESTOS CONSULTANT. IT IS A VIOLATION OF THE PROFESSIONAL LICENSE LAW FOR ANY PERSON TO ALTER THIS DRAWING IN ANY WAY, UNLESS ACTING UNDER THE DIRECTION OF A REGISTERED ARCHITECT. THE ACTING ARCHITECT SHALL AFFIX HIS SEAL AND THE NOTATION "ALTERED BY" FOLLOWED BY HIS SIGNATURE AND DATE OF ALTERATION AND A SPECIFIC DESCRIPTION OF THE ALTERATION.

Michael Muroff Architect, LLC
333 Hudson Street
Suite 501
New York, NY 10013
Tel: 646. 230. 7111
Fax: 646. 230. 7277
NY Licence #015011

225 EAST 138th STREET

NYC DOB BIN: 2000973, 2000974
Block: 2340 Lots: 56, 58

BUILDING ELEVATIONS
RIDER AND REAR

Date: 5-29-15
Scale: As Noted
Project No. : 14-165
Drawing By: RF
Checked By: MM

A-201.00

SHEET #24 OF 31

©

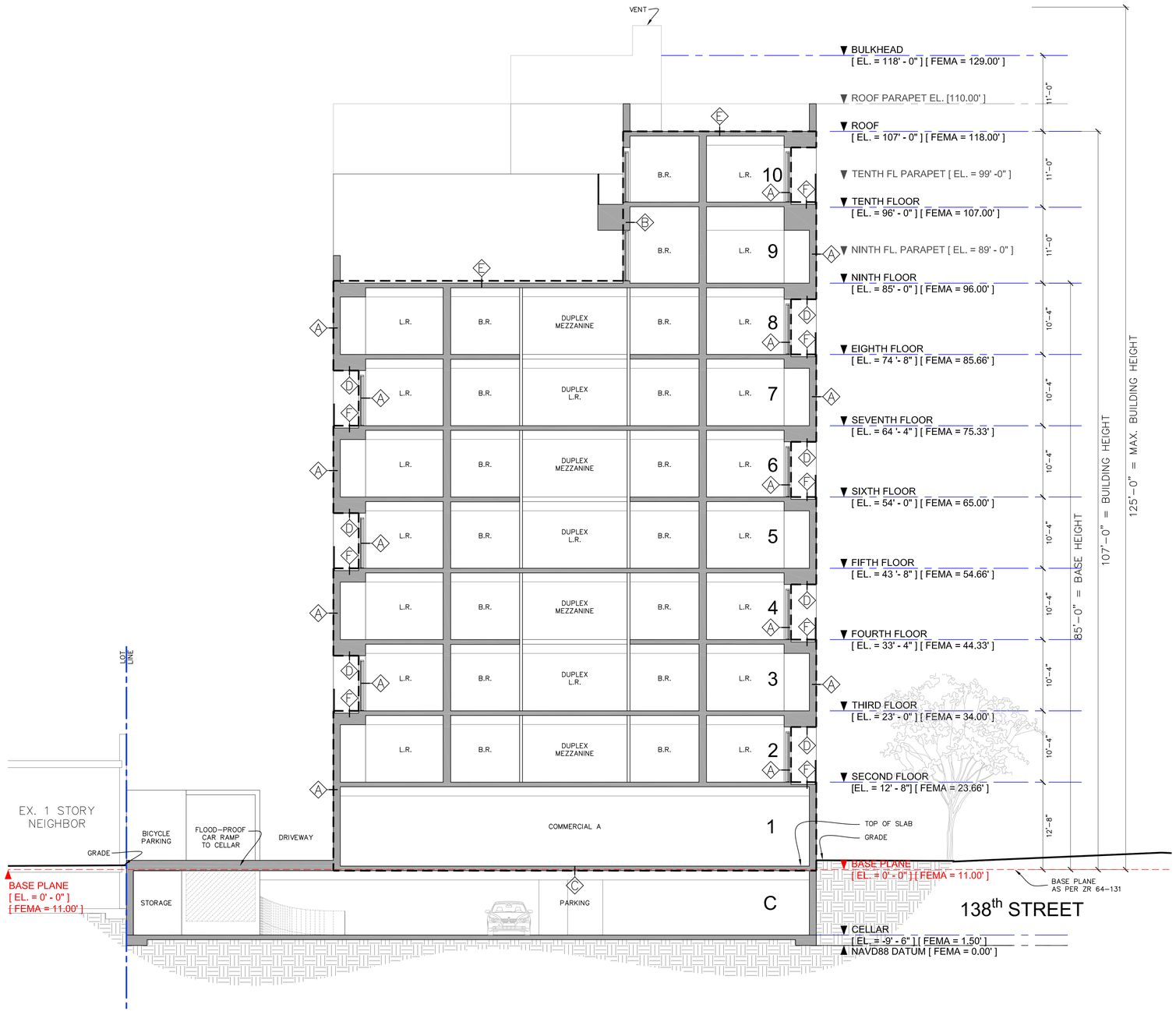

1 BUILDING SECTION – TRANSVERSE

SCALE: 1/8" = 1'-0"

ENVELOPE LEGEND:

REFER TO DRAWING A-600 FOR DETAILS

LINE OF EXTERIOR ENVELOPE

(A) **EXTERIOR WALLS 1** (COMMERICIAL) **AND 2** (RESIDENTIAL):
STEEL FRAME 16" O.C.
CAVITY INSULATION R = 32
CONTINUOUS INSULATION R = 12.5

(B) **EXTERIOR WALL 3:** METAL BUILDING WALL SINGLE LAYER MINERAL FIBER (RESIDENTIAL) @ BALCONIES ONLY:
CAVITY INSULATION R = 13
CONTINUOUS INSULATION R = –

(C) **FLOOR 2** STEEL JOIST (COMMERCIAL):
CAVITY INSULATION R = 32
CONTINUOUS INSULATION R = –

(D) **FLOOR 3** STEEL JOIST (RESIDENTIAL):
CAVITY INSULATION R = 32
CONTINUOUS INSULATION R = 12.5

(E) **ROOF 1** INSULATION ENTIRELY ABOVE DECK (RESIDENTIAL) @ MAIN ROOF:
CAVITY INSULATION R = –
CONTINUOUS INSULATION R = 25

(F) **ROOF 2** INSULATION ENTIRELY ABOVE DECK (RESIDENTIAL) @ TERRACES ONLY:
CAVITY INSULATION R = –
CONTINUOUS INSULATION R = 15

ENERGY CODE NOTES - BUILDING ENVELOPE:

CELLAR SHALL BE USED SOLELY FOR PARKING, STORAGE, AND MECHANICAL PURPOSED.

THE BUILDING ENVELOPE SHALL CONTAIN A CONTINUOUS AIR BARRIER THAT IS SEALED IN AN APPROVED MANNER AND EITHER CONSTRUCTED OR TESTED IN AN APPROVED MANNER. AIR BARRIER PENETRATIONS SHALL BE SEALED IN AN APPROVED MANNER.

ALL SOURCES OF AIR LEAKAGE IN THE BUILDING THERMAL EVELOPE SHALL BE SEALED, CAULKED, GASKETED, WEATHER STRIPPED, OR WRAPPED WITH MOISTURE VAPOR-PERMEABLE WRAPPING MATERIAL TO MINIMIZE AIR LEAKAGE.

ALL EXTERIOR INSULATION SHALL BE PROTECTED FROM DAMAGE WITH A PROTECTIVE MATERIAL. VERIFICATION FOR EXPOSED FOUNDATION INSULATION MAY NEED TO OCCUR DURING FINAL INSPECTION.

ALL INSULATION SHALL BE INSTALLED PER MANUFACTURER'S INSTRUCTIONS INCLUDING ROOF, FLOOR, ABOVE-GRADE WALL, BELOW-GRADE WALL, AND SLAB EDGE.

BLOWN OR POURED LOOSE-FILL INSULATION IS INSTALLED ONLY WHERE THE ROOF SLOPE IS <= 3 IN 12.

BUILDING ENVELOPE INSULATION SHALL BE LABELED WITH R-VALUE OR INSULATION CERTIFICATE PROVIDING R-VALUE AND OTHER RELEVANT DATA.

RECESSED LUMINAIRES IN THERMAL ENVELOPE SHALL LIMIT INFILTRATION AND BE IC RATED AND LABELED. SEAL BETWEEN INTERIOR FINISH AND LUMINAIRE HOUSING.

REVISIONS		
NO.	DESCRIPTIONS	DATE
1	DOB	5-29-15

NO.	TO WHOM ISSUED	DATE
	ISSUES	

Tahoe Development Group LLC
8217 153rd Avenue
Howard Beach, NY 11414
Owner
Anthony Gurino
718 835 4700

Michael Muroff Architect, LLC
333 Hudson Street, Suite 501
New York, NY 10013
Architect
Michael Muroff
646 230 7111

Structural Engineering Systems, PLLC
214-41 42nd Avenue, Suite 2B
Bayside, NY 11361
Structural Engineer
Joseph Gulino
718 224 7161

S. Schwartz Engineering, PLLC
15 West 39th Street, Suite PH
New York, NY 10018
MEP Engineer
Simon Schwartz
212 695 3509

THIS DRAWING IS AN INSTRUMENT OF SERVICE AND SHALL REMAIN THE PROPERTY OF MICHAEL MUROFF ARCHITECT,L.L.C., WHETHER THE PROJECT FOR WHICH IT IS MADE IS EXECUTED OR NOT. THIS DRAWING SHALL NOT BE USED BY THE OWNER OR OTHERS ON OTHER PROJECTS, FOR ADDITIONS TO THIS PROJECT OR FOR COMPLETION OF THIS PROJECT BY OTHERS EXCEPT BY AGREEMENT IN WRITING WITH MICHAEL MUROFF ARCHITECT,L.L.C.. SUBMISSION OR DISTRIBUTION TO MEET OFFICIAL REGULATORY REQUIREMENTS OR FOR OTHER PURPOSES IN CONNECTION WITH THE PROJECT IS NOT TO BE CONSTRUED AS PUBLICATION IN DEROGATION OF THE RIGHTS OF MICHAEL MUROFF ARCHITECT,L.L.C.. REPRODUCTION OR PUBLICATION BY ANY METHOD IN WHOLE OR IN PART IS PROHIBITED. TITLE TO THIS DRAWING BELONGS TO MICHAEL MUROFF ARCHITECT,L.L.C. WITHOUT PREJUDICE.

THE FIRM OF MICHAEL MUROFF ARCHITECT,L.L.C. HAS NOT BEEN RETAINED TO DO FIELD SUPERVISION OR INSPECTION. THE FIRM OF MICHAEL MUROFF ARCHITECT,L.L.C. IT'S PRINCIPLES, EMPLOYEES, AND CONSULTANTS HAVE NOT BEEN RETAINED TO PROVIDE ANY SERVICES RELATED TO ASBESTOS, TOXIC WASTE, OR HAZARDOUS MATERIALS, THEIR REMOVAL, ABATEMENTS, OR ENCAPSULATING. MICHAEL MUROFF ARCHITECT,L.L.C. ET AL. DO NOT SPECIFY OR MAKE RECOMMENDATIONS RELATED TO ASBESTOS IN ANY FORM. MICHAEL MUROFF ARCHITECT,L.L.C. ET AL. DO NOT ENTER INTO ANY ASBESTOS CONTAMINATED AREAS. IF ASBESTOS IS FOUND ASBESTOS CONTAMINANT OR REMOVAL PROGRAMS, THE OWNER OF THIS BUILDING HAS RETAINED AN INDEPENDENT ASBESTOS CONSULTANT. ALL INQUIRIES SHOULD BE DIRECTED TO THE OWNER OR HIS ASBESTOS CONSULTANT. IT IS A VIOLATION OF THE PROFESSIONAL LICENSE LAW FOR ANY PERSON TO ALTER THIS DRAWING IN ANY WAY, UNLESS ACTING UNDER THE DIRECTION OF A REGISTERED ARCHITECT. THE ALTERING ARCHITECT SHALL AFFIX HIS SEAL AND THE NOTATION "ALTERED BY" FOLLOWED BY HIS SIGNATURE AND DATE OF ALTERATION AND A SPECIFIC DESCRIPTION OF THE ALTERATION.

Michael Muroff Architect, LLC
333 Hudson Street
Suite 501
New York, NY 10013
Tel: 646. 230. 7111
Fax: 646. 230. 7277
NY Licence #015011

225 EAST 138th STREET

NYC DOB BIN: 2000973, 2000974
Block: 2340 Lots: 56, 58

BUILDING SECTION
TRANSVERSE

Date: 5-29-15
Scale: As Noted
Project No. : 14-165
Drawing By: RF
Checked By: MM

A-300.00

SHEET # 25 OF 31

©

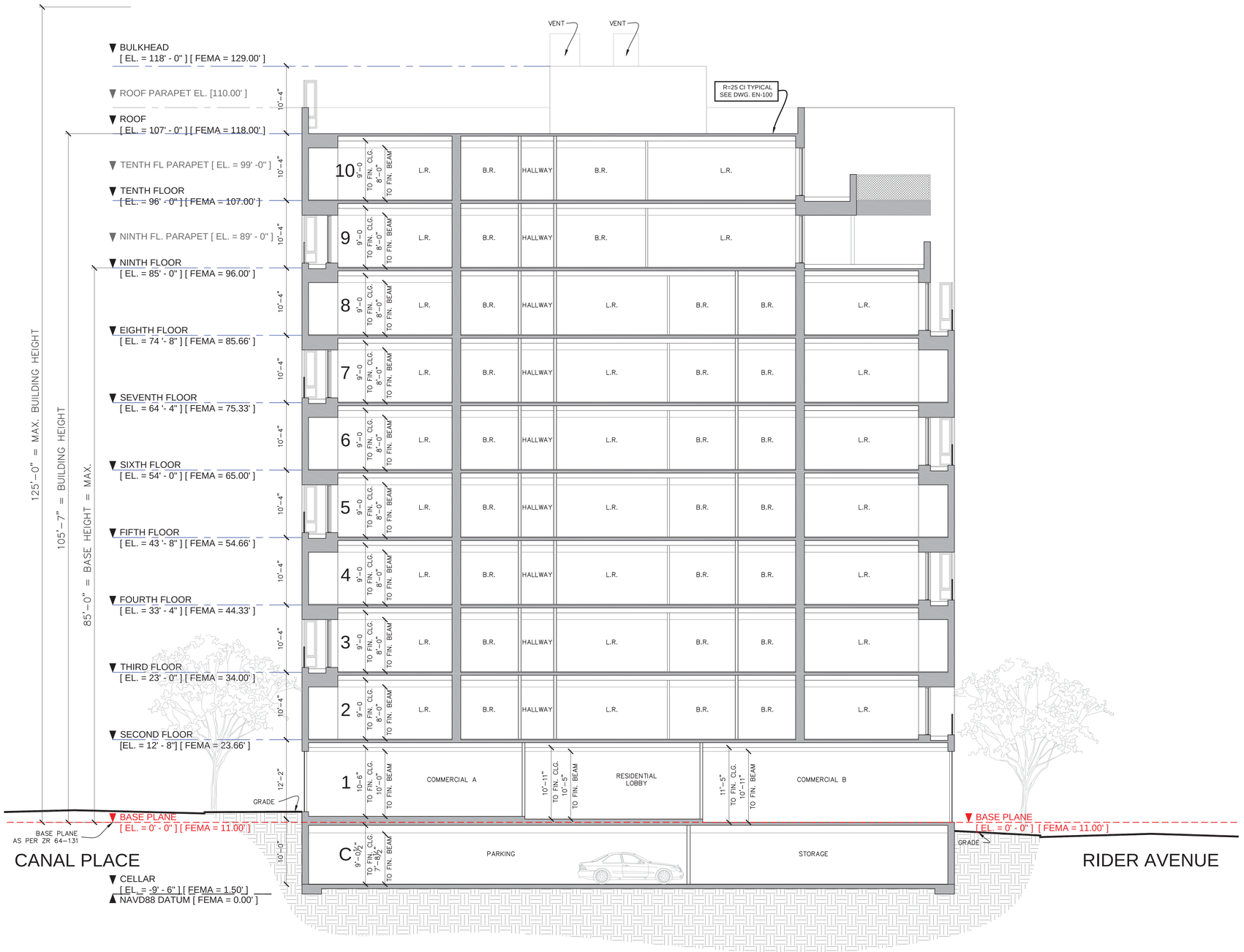

1 BUILDING SECTION – LONGITUDINAL

SCALE: 1/8" = 1'-0"

REVISIONS		
NO.	DESCRIPTIONS	DATE
1	DOB	5-29-15
NO.	TO WHOM ISSUED	DATE
ISSUES		

Tahoe Development Group LLC
8217 153rd Avenue
Howard Beach, NY 11414
Owner
Anthony Gurino
718 835 4700

Michael Muroff Architect, LLC
333 Hudson Street, Suite 501
New York, NY 10013
Architect
Michael Muroff
646 230 7111

Structural Engineering Systems, PLLC
214-41 42nd Avenue, Suite 2B
Bayside, NY 11361
Structural Engineer
Joseph Gulino
718 224 7161

S. Schwartz Engineering, PLLC
15 West 39th Street, Suite PH
New York, NY 10018
MEP Engineer
Simon Schwartz
212 695 3509

THIS DRAWING IS AN INSTRUMENT OF SERVICE AND SHALL REMAIN THE PROPERTY OF MICHAEL MUROFF ARCHITECT,L.L.C. WHETHER THE OBJECT FOR WHICH IT IS MADE IS EXECUTED OR NOT. THIS DRAWING SHALL NOT BE USED BY THE OWNER OR OTHERS ON OTHER PROJECTS, FOR ADDITIONS TO THIS PROJECT OR FOR COMPLETION OF THIS PROJECT BY OTHERS EXCEPT BY AGREEMENT IN WRITING WITH MICHAEL MUROFF ARCHITECT,L.L.C. SUBMISSION OR DISTRIBUTION TO MEET OFFICIAL REGULATORY REQUIREMENTS OR FOR OTHER PURPOSES IN CONNECTION WITH THE PROJECT IS NOT TO BE CONSTRUED AS PUBLICATION IN DEROGATION OF THE ARCHITECT'S RIGHTS. THIS DRAWING MAY NOT BE REPRODUCED IN WHOLE OR IN PART OR USED IN WHOLE OR IN PART IS PROHIBITED. TITLE TO THIS DRAWING BELONGS TO MICHAEL MUROFF ARCHITECT,L.L.C. WITHOUT PREJUDICE.

THE FIRM OF MICHAEL MUROFF ARCHITECT,L.L.C. HAS NOT BEEN RETAINED TO DO FIELD SUPERVISION OR INSPECTION. THE FIRM OF MICHAEL MUROFF ARCHITECT,L.L.C. IT'S PRINCIPALS, EMPLOYEES, AND CONSULTANTS HAVE NOT BEEN RETAINED TO PROVIDE ANY SERVICES RELATED TO ASBESTOS, TOXIC WASTE, OR HAZARDOUS MATERIALS, THEIR REMOVAL, AMENDMENTS, OR ENCAPSULATING. MICHAEL MUROFF ARCHITECT,L.L.C. IT AL, DO NOT SPECIFY OR MAKE RECOMMENDATIONS RELATED TO ASBESTOS IN ANY FORM. ASBESTOS EXPOSURE ASSESSMENTS, APPRAISALS ASBESTOS HEALTH HAZARDS OR EXPOSURE, CORRECTIVE ACTION PROGRAMS, OR ASBESTOS MANAGEMENT PLANS ARE NOT PART OF THIS PROJECT. ANY ASBESTOS ISSUES OR QUESTIONS SHOULD BE DIRECTED TO THE CONSULTANT. ALL INQUIRIES SHOULD BE DIRECTED TO THE OWNER OR HIS ASBESTOS CONSULTANT. IT IS A VIOLATION OF THE PROFESSIONAL LICENSE LAW FOR ANY PERSON TO ALTER THIS DRAWING IN ANY WAY, UNLESS ACTING UNDER THE DIRECTION OF A REGISTERED ARCHITECT. THE ALTERING ARCHITECT SHALL AFFIX HIS SEAL AND THE NOTATION "ALTERED BY" FOLLOWED BY HIS SIGNATURE AND DATE OF ALTERATION AND A SPECIFIC DESCRIPTION OF THE ALTERATION.

Michael Muroff Architect, LLC
333 Hudson Street
Suite 501
New York, NY 10013
Tel: 646. 230. 7111
Fax: 646. 230. 7277
NY Licence #015011

225 EAST 138th STREET

NYC DOB BIN: 2000973, 2000974
Block: 2340 Lots: 56, 58

BUILDING SECTION
LONGITUDINAL

Date: 5-29-15
Scale: As Noted
Project No.: 14-165
Drawing By: RF
Checked By: MM

A-301.00

SHEET #26 OF 31

©

APPENDIX 2

CITIZEN PARTICIPATION PLAN

The NYC Office of Environmental Remediation and Tahoe Development have established this Citizen Participation Plan because the opportunity for citizen participation is an important component of the NYC Voluntary Cleanup Program. This Citizen Participation Plan describes how information about the project will be disseminated to the Community during the remedial process. As part of its obligations under the NYC VCP, Tahoe Development will maintain a repository for project documents and provide public notice at specified times throughout the remedial program. This Plan also takes into account potential environmental justice concerns in the community that surrounds the project Site. Under this Citizen Participation Plan, project documents and work plans are made available to the public in a timely manner. Public comment on work plans is strongly encouraged during public comment periods. Work plans are not approved by the NYC Office of Environmental Remediation (OER) until public comment periods have expired and all comments are formally reviewed. An explanation of cleanup plans in the form of a public meeting or informational session is available upon request to OER's project manager assigned to this Site, William Wong, who can be contacted about these issues or any others questions, comments or concerns that arise during the remedial process at (212) 788-8841.

Project Contact List: OER has established a Site Contact List for this project to provide public notices in the form of fact sheets to interested members of the Community. Communications will include updates on important information relating to the progress of the cleanup program at the Site as well as to request public comments on the cleanup plan. The Project Contact List includes owners and occupants of adjacent buildings and homes, principal administrators of nearby schools, hospitals and day care centers, the public water supplier that serves the area, established document repositories, the representative Community Board, City Council members, other elected representatives and any local Brownfield Opportunity Area (BOA) grantee organizations. Any member of the public or organization will be added to the

Site Contact List on request. A copy of the Site Contact List is maintained by OER's project manager. If you would like to be added to the Project Contact List, contact NYC OER at (212) 788-8841 or by email at brownfields@cityhall.nyc.gov.

Repositories: A document repository is maintained online. Internet access to view OER's document repositories is available at public libraries. This document repository is intended to house, for community review, all principal documents generated during the cleanup program including Remedial Investigation plans and reports, Remedial Action work plans and reports, and all public notices and fact sheets produced during the lifetime of the remedial project. The library nearest the Site is:

Mott Haven Library
321 East 140th Street, Bronx, NY 10454
(718) 665-4878
Monday and Thursday: 10:00 AM – 6:00 PM
Tuesday and Wednesday: 10:00 AM – 7:00 PM
Friday and Saturday: 10:00 AM – 5:00 PM

Digital Documentation: NYC OER requires the use of digital documents in our repository as a means of minimizing paper use while also increasing convenience in access and ease of use.

Issues of Public Concern: There are no known issues of public concern.

Public Notice and Public Comment: Public notice to all members of the Project Contact List is required at three major steps during the performance of the cleanup program (listed below) and at other points that may be required by OER. Notices will include Fact Sheets with descriptive project summaries, updates on recent and upcoming project activities, repository information, and important phone and email contact information. All notices will be reviewed and approved by OER prior to distribution and mailed by the Enrollee. Public comment is solicited in public notices for all work plans developed under the NYC Voluntary Cleanup

Program. Final review of all work plans by OER will consider all public comments. Approval will not be granted until the public comment period has been completed.

Citizen Participation Milestones: Public notice and public comment activities occur at several steps during a typical NYC VCP project. These steps include:

- **Public Notice of the availability of the Remedial Investigation Report and Remedial Action Work Plan and a 30-day public comment period on the Remedial Action Work Plan:** Public notice in the form of a Fact Sheet is sent to all parties listed on the Site Contact List announcing the availability of the Remedial Investigation Report and Remedial Action Work Plan and the initiation of a 30-day public comment period on the Remedial Action Work Plan. The Fact Sheet summarizes the findings of the RIR and provides details of the RAWP. The public comment period will be extended an additional 15 days upon public request. A public meeting or informational session will be conducted by OER upon request.
- **Public Notice announcing the approval of the RAWP and the start of remediation:** Public notice in the form of a Fact Sheet is sent to all parties listed on the Site Contact List announcing the approval of the RAWP and the start of remediation.
- **Public Notice announcing the completion of remediation, designation of Institutional and Engineering Controls and issuance of the Notice of Completion:** Public notice in the form of a Fact Sheet is sent to all parties listed on the Site Contact List announcing the completion of remediation, providing a list of all Institutional and Engineering Controls implemented for to the Site and announcing the issuance of the Notice of Completion.

APPENDIX 3

SUSTAINABILITY STATEMENT

This Sustainability Statement documents sustainable activities and green remediation efforts planned under this remedial action.

Reuse of Clean, Recyclable Materials and Reduced Consumption of Non-Renewable Resources: Reuse of clean, locally-derived recyclable materials reduces consumption of non-renewable virgin resources and can provide energy savings and greenhouse gas reduction.

An estimate of the quantity (in tons) of clean, non-virgin materials (reported by type of material) reused under this plan will be quantified and reported in the RAR.

Reduced Energy Consumption and Promotion of Greater Energy Efficiency: Reduced energy consumption lowers greenhouse gas emissions, improves local air quality, lessens in-city power generation requirements, can lower traffic congestion, and provides substantial cost savings.

Best efforts will be made to quantify energy efficiencies achieved during the remediation and will be reported in the Remedial Action Report (RAR). Where energy savings cannot be easily quantified, a gross indicator of the amount of energy saved or the means by which energy savings was achieved will be reported.

Conversion to Clean Fuels: Use of clean fuel improves NYC's air quality by reducing harmful emissions.

Natural gas will be utilized for fuel in the new building.

An estimate of the volume of clean fuels used during remedial activities will be quantified and reported in the RAR.

Recontamination Control: Recontamination after cleanup and redevelopment is completed undermines the value of work performed, may result in a property that is less protective of public health or the environment, and may necessitate additional cleanup work later or impede future redevelopment. Recontamination can arise from future releases that occur within the property or by influx of contamination from off-Site.
An estimate of the area of the Site that utilizes recontamination controls under this plan will be reported in the RAR in square feet.

Storm water Retention: Storm water retention improves water quality by lowering the rate of combined storm water and sewer discharges to NYC's sewage treatment plants during periods of precipitation, and reduces the volume of untreated influent to local surface waters.
An estimate of the enhanced storm water retention capability of the redevelopment project will be included in the RAR.

Linkage with Green Building: Green buildings provide a multitude of benefits to the city across a broad range of areas, such as reduction of energy consumption, conservation of resources, and reduction in toxic materials use.
The number of Green Buildings that are associated with this brownfield redevelopment property will be reported in the RAR. The total square footage of green building space created as a function of this brownfield redevelopment will be quantified for residential, commercial and industrial/manufacturing uses.

Paperless Voluntary Cleanup Program: Tahoe Development is participating in OER's Paperless Voluntary Cleanup Program. Under this program, submission of electronic documents will replace submission of hard copies for the review of project documents, communications and milestone reports.

Low-Energy Project Management Program: Tahoe Development is participating in OER's low-energy project management program. Under this program, whenever possible, meetings are held using remote communication technologies, such as videoconferencing and

teleconferencing to reduce energy consumption and traffic congestion associated with personal transportation.

Trees and Plantings: Trees and other plantings provide habitat and add to NYC's environmental quality in a wide variety of ways. Native plant species and native habitat provide optimal support to local fauna, promote local biodiversity, and require less maintenance.
An estimate of the land area that will be vegetated, including the number of trees planted or preserved, will be reported in square feet in the RAR.

APPENDIX 4

SOIL/MATERIALS MANAGEMENT PLAN

1.1 Soil Screening Methods

Visual, olfactory and PID soil screening and assessment will be performed under the supervision of a Qualified Environmental Professional and will be reported in the final remedial report. Soil screening will be performed during invasive work performed during the remedy and development phases prior to issuance of final signoff by OER.

1.2 Stockpile Methods

Excavated soil from suspected areas of contamination (e.g., hot spots, USTs, drains, etc.) will be stockpiled separately and will be segregated from clean soil and construction materials. Stockpiles will be used only when necessary and will be removed as soon as practicable. While stockpiles are in place, they will be inspected daily, and before and after every storm event. Results of inspections will be recorded in a logbook and maintained at the Site and available for inspection by OER. Excavated soils will be stockpiled on, at minimum, double layers of 8-mil minimum sheeting, will be kept covered at all times with appropriately anchored plastic tarps, and will be routinely inspected. Broken or ripped tarps will be promptly replaced.
All stockpile activities will be compliant with applicable laws and regulations. Soil stockpile areas will be appropriately graded to control run-off in accordance with applicable laws and regulations. Stockpiles of excavated soils and other materials shall be located at least of 50 feet from the property boundaries, where possible. Hay bales or equivalent will surround soil stockpiles except for areas where access by equipment is required. Silt fencing and hay bales will be used as needed near catch basins, surface waters and other discharge points.

1.3 Characterization of Excavated Materials

Soil/fill or other excavated media that is transported off-Site for disposal will be sampled in a manner required by the receiving facility, and in compliance with applicable laws and regulations. Soils proposed for reuse on-Site will be managed as defined in this plan.

1.4 Materials Excavation, Load-Out, and Departure

The PE/QEP overseeing the remedial action will:

- oversee remedial work and the excavation and load-out of excavated material;
- ensure that there is a party responsible for the safe execution of invasive and other work performed under this work plan;
- ensure that Site development activities and development-related grading cuts will not interfere with, or otherwise impair or compromise the remedial activities proposed in this RAWP;
- ensure that the presence of utilities and easements on the Site has been investigated and that any identified risks from work proposed under this plan are properly addressed by appropriate parties;
- ensure that all loaded outbound trucks are inspected and cleaned if necessary before leaving the Site;
- ensure that all egress points for truck and equipment transport from the Site will be kept clean of Site-derived materials during Site remediation.

Locations where vehicles exit the Site shall be inspected daily for evidence of soil tracking off premises. Cleaning of the adjacent streets will be performed as needed to maintain a clean condition with respect to Site-derived materials.

Open and uncontrolled mechanical processing of historical fill and contaminated soil on-Site will not be performed without prior OER approval.

1.5 Off-Site Materials Transport

Loaded vehicles leaving the Site will comply with all applicable materials transportation requirements (including appropriate covering, manifests, and placards) in accordance with applicable laws and regulations, including use of licensed haulers in accordance with 6 NYCRR Part 364. If loads contain wet material capable of causing leakage from trucks, truck liners will be used. Queuing of trucks will be performed on-Site, when possible in order to minimize off Site disturbance. Off-Site queuing will be minimized.

Outbound truck transport routes are described in the remedial report. This routing takes into account the following factors: (a) limiting transport through residential areas and past sensitive sites; (b) use of mapped truck routes; (c) minimizing off-Site queuing of trucks entering the facility; (d) limiting total distance to major highways; (e) promoting safety in access to highways; and (f) overall safety in transport. To the extent possible, all trucks loaded with Site materials will travel from the Site using these truck routes. Trucks will not stop or idle in the neighborhood after leaving the project Site.

1.6 Materials Disposal Off-Site

The following documentation will be established and reported by the PE/QEP for each disposal destination used in this project to document that the disposal of regulated material exported from the Site conforms with applicable laws and regulations: (1) a letter from the PE/QEP or Enrollee to each disposal facility describing the material to be disposed and requesting written acceptance of the material. This letter will state that material to be disposed is regulated material generated at an environmental remediation Site in New York City under a governmental remediation program. The letter will provide the project identity and the name and phone number of the PE/QEP or Enrollee. The letter will include as an attachment a summary of all chemical data for the material being transported; and (2) a letter from each disposal facility stating it is in receipt of the correspondence (1, above) and is approved to accept the material. These documents will be included in the final remedial report.

The Remedial Action Report will include an itemized account of the destination of all material removed from the Site during this remedial action. Documentation associated with disposal of all material will include records and approvals for receipt of the material. This information will be presented in the final remedial report.

All impacted soil/fill or other waste excavated and removed from the Site will be managed as regulated material and will be disposed in accordance with applicable laws and regulations. Historic fill and contaminated soils taken off-Site will be handled as solid waste and will not be disposed at a Part 360-16 Registration Facility (also known as a Soil Recycling Facility). Waste characterization will be performed for off-Site disposal in a manner required by the receiving facility and in conformance with its applicable permits. Waste characterization sampling and analytical methods, sampling frequency, analytical results and QA/QC will be

reported in the final remedial report. A manifest system for off-Site transportation of exported materials will be employed. Manifest information will be reported in the final remedial report. Hazardous wastes derived from on-Site will be stored, transported, and disposed of in compliance with applicable laws and regulations.

If disposal of soil/fill from this Site is proposed for unregulated disposal (i.e., clean soil removed for development purposes), including transport to a Part 360-16 Registration Facility, a formal request will be made for approval by OER with an associated plan compliant with 6NYCRR Part 360-16. This request and plan will include the location, volume and a description of the material to be recycled, including verification that the material is not impacted by site uses and that the material complies with receipt requirements for recycling under 6NYCRR Part 360. This material will be appropriately handled on-Site to prevent mixing with impacted material.

1.7 Materials Reuse On-Site

Soil and fill that is derived from the property that meets the Soil Cleanup Objectives (SCOs) established in this plan may be reused on-Site. The SCOs for on-Site reuse are listed in Section 4.2 of this cleanup plan. 'Reuse on-Site' means material that is excavated during the remedy or development, does not leave the property, and is relocated within the same property and on land with comparable levels of contaminants in soil/fill material, compliant with applicable laws and regulations, and addressed pursuant to the NYC VCP agreement subject to Engineering and Institutional Controls. The PE/QEP will ensure that reused materials are segregated from other materials to be exported from the Site and that procedures defined for material reuse in this remedial plan are followed. The expected location for placement of reused material is shown in Section 4.2.

Organic matter (wood, roots, stumps, etc.) or other waste derived from clearing and grubbing of the Site will not be buried on-Site. Soil or fill excavated from the site for grading or other purposes will not be reused within a cover soil layer or within landscaping berms.

1.8 Demarcation

After completion of hotspot removal and any other invasive remedial activities, and prior to backfilling, the top of the residual soil/fill will be defined by one of three methods: (1) placement of a demarcation layer. The demarcation layer will consist of geosynthetic fencing or equivalent

material to be placed on the surface of residual soil/fill to provide an observable reference layer. A description or map of the approximate depth of the demarcation layer will be provided in the SMP; or (2) a land survey of the top elevation of residual soil/fill before the placement of cover soils, pavement and associated sub-soils, or other materials or structures or, (3) all materials beneath the approved cover will be considered impacted and subject to site management after the remedy is complete. Demarcation may be established by one or any combination of these three methods. As appropriate, a map showing the method of demarcation for the Site and all associated documentation will be presented in the RAR.

This demarcation will constitute the top of the site management horizon. Materials within this horizon require adherence to special conditions during future invasive activities as defined in the Site Management Plan.

1.9 Import of Backfill Soil From Off-Site Sources

This Section presents the requirements for imported fill materials to be used below the cover layer and within the clean soil cover layer. All imported soils will meet OER-approved backfill and cover soil quality objectives for this Site. Imported soils will not exceed groundwater protection standards established in Part 375. Imported soils for Track 1 remedial action projects will not exceed Track 1 SCO's.

A process will be established to evaluate sources of backfill and cover soil to be imported to the Site, and will include an examination of source location, current and historical use(s), and any applicable documentation. Material from industrial sites, spill sites, environmental remediation sites or other potentially contaminated sites will not be imported to the Site.

The following potential sources may be used pending attainment of backfill and cover soil quality objectives:

- Clean soil from construction projects at non-industrial sites in compliance with applicable laws and regulations;
- Clean soil from roadway or other transportation-related projects in compliance with applicable laws and regulations;
- Clean recycled concrete aggregate (RCA) from facilities permitted or registered by the regulations of NYS DEC.

- All materials received for import to the Site will be approved by a PE/QEP and will be in compliance with provisions in this remedial plan. The final remedial report will report the source of the fill, evidence that an inspection was performed on the source, chemical sampling results, frequency of testing, and a Site map indicating the locations where backfill or soil cover was placed.
- All material will be subject to source screening and chemical testing.
- Inspection of imported fill material will include visual, olfactory and PID screening for evidence of contamination. Materials imported to the Site will be subject to inspection, as follows:
- Trucks with imported fill material will be in compliance with applicable laws and regulations and will enter the Site at designated locations;
- The PE/QEP is responsible to ensure that every truck load of imported material is inspected for evidence of contamination; and
- Fill material will be free of solid waste including pavement materials, debris, stumps, roots, and other organic matter, as well as ashes, oil, perishables or foreign matter.

Composite samples of imported material will be taken at a minimum frequency of one sample for every 500 cubic yards of material. Once it is determined that the fill material meets imported backfill or cover soil chemical requirements and is non-hazardous, and lacks petroleum contamination, the material will be loaded onto trucks for delivery to the Site.
Recycled concrete aggregate (RCA) will be imported from facilities permitted or registered by NYSDEC. Facilities will be identified in the final remedial report. A PE/QEP is responsible to ensure that the facility is compliant with 6NYCRR Part 360 registration and permitting requirements for the period of acquisition of RCA. RCA imported from compliant facilities will not require additional testing, unless required by NYSDEC under its terms for operation of the facility. RCA imported to the Site must be derived from recognizable and uncontaminated concrete. RCA material is not acceptable for, and will not be used as cover material.

1.10 Fluids Management

All liquids to be removed from the Site, including dewatering fluids, will be handled, transported and disposed in accordance with applicable laws and regulations. Liquids discharged into the

New York City sewer system will receive prior approval by New York City Department of Environmental Protection (NYC DEP). The NYC DEP regulates discharges to the New York City sewers under Title 15, Rules of the City of New York Chapter 19. Discharge to the New York City sewer system will require an authorization and sampling data demonstrating that the groundwater meets the City's discharge criteria. The dewatering fluid will be pretreated as necessary to meet the NYC DEP discharge criteria. If discharge to the City sewer system is not appropriate, the dewatering fluids will be managed by transportation and disposal at an off-Site treatment facility.

Discharge of water generated during remedial construction to surface waters (i.e. a stream or river) is prohibited without a SPDES permit issued by New York State Department of Environmental Conservation.

1.11 Storm water Pollution Prevention

Applicable laws and regulations pertaining to storm water pollution prevention will be addressed during the remedial program. Erosion and sediment control measures identified in this remedial plan (silt fences and barriers, and hay bale checks) will be installed around the entire perimeter of the remedial construction area and inspected once a week and after every storm event to ensure that they are operating appropriately. Discharge locations will be inspected to determine whether erosion control measures are effective in preventing significant impacts to receptors. Results of inspections will be recorded in a logbook and maintained at the Site and available for inspection by OER. All necessary repairs shall be made immediately. Accumulated sediments will be removed as required to keep the barrier and hay bale check functional. Undercutting or erosion of the silt fence toe anchor will be repaired immediately with appropriate backfill materials. Manufacturer's recommendations will be followed for replacing silt fencing damaged due to weathering.

1.12 Contingency Plan for Unknown Contamination Sources

This contingency plan is developed for the remedial construction to address the discovery of unknown structures or contaminated media during excavation. Identification of unknown contamination source areas during invasive Site work will be promptly communicated to OER's Project Manager. Petroleum spills will be reported to the NYS DEC Spill Hotline. These findings

will be included in the daily report. If previously unidentified contaminant sources are found during on-Site remedial excavation or development-related excavation, sampling will be performed on contaminated source material and surrounding soils and reported to OER. Chemical analytical testing will be performed for TAL metals, TCL volatiles and semi-volatiles, TCL pesticides and PCBs, as appropriate.

1.13 Odor, Dust, and Nuisance Control

Odor Control

All necessary means will be employed to prevent on- and off-Site odor nuisances. At a minimum, procedures will include: (a) limiting the area of open excavations; (b) shrouding open excavations with tarps and other covers; and (c) use of foams to cover exposed odorous soils. If odors develop and cannot otherwise be controlled, additional means to eliminate odor nuisances will include: (d) direct load-out of soils to trucks for off-Site disposal; and (e) use of chemical odorants in spray or misting systems.

This odor control plan is capable of controlling emissions of nuisance odors. If nuisance odors are identified, work will be halted and the source of odors will be identified and corrected. Work will not resume until all nuisance odors have been abated. OER will be notified of all odor complaint events. Implementation of all odor controls, including halt of work, will be the responsibility of the PE/QEP's certifying this remedial plan.

Dust Control

Dust management during invasive on-Site work will include, at a minimum:

- Use of a dedicated water spray methodology for roads, excavation areas and stockpiles.
- Use of properly anchored tarps to cover stockpiles.
- Exercise extra care during dry and high-wind periods.
- Use of gravel or recycled concrete aggregate on egress and other roadways to provide a clean and dust-free road surface.

This dust control plan is capable of controlling emissions of dust. If nuisance dust emissions are identified, work will be halted and the source of dusts will be identified and corrected. Work will not resume until all nuisance dust emissions have been abated. OER will be notified of all

dust complaint events. Implementation of all dust controls, including halt of work, will be the responsibility of the PE/QEP's responsible for certifying this remedial plan.

Other Nuisances

Noise control will be exercised during the remedial program. All remedial work will conform, at a minimum, to NYC noise control standards.

Rodent control will be provided during Site clearing and grubbing and during the remedial program, as necessary, to prevent nuisances.

APPENDIX 5

CONSTRUCTION HEALTH AND SAFETY PLAN

HEALTH & SAFETY PLAN

221 East 138th Street
Bronx, New York
Block 2340, Lots 56 and 58
E-227, CEQR #08DCP071X

Table of Contents

1.0 Introduction 2
2.0 Health and Safety Staff 3
3.0 Chemical & Waste Description/Characterization 4
4.0 Hazard Assessment 5
5.0 Training 13
6.0 Medical Surveillance 15
7.0 Site Control, PPE & Communications 16
8.0 Air Monitoring Plan 19
9.0 Safety Considerations 22
10.0 Decontamination and Disposal Procedures 25
11.0 Emergency Plan 27
12.0 Logs, Reports and Record Keeping 30
13.0 Sanitation 31

Figures

1. Directions to Hospital

Attachments

A. Health and Safety Fact Sheets

1.0 Introduction

The HASP has been prepared in conformance with applicable regulations, safe work practices and the project's requirements. It addresses those activities associated with the installation and sampling of soil probes, monitoring wells and sub-slab vapor sampling points. The Project Manager (PM), Site Safety Officer (SSO) and Hydro Tech field staff will implement the Plan during site work. Compliance with this HASP is required of all persons and third parties who perform fieldwork for this project. Assistance in implementing this HASP can be obtained from the Hydro Tech's SSO. The content of this HASP may change or undergo revision based upon additional information that is made available to health and safety personnel, monitoring results or changes in the technical scope of work. Any changes proposed must be reviewed by the SSO.

SCOPE OF WORK

The Scope of Work activities will include the following:

- Installation of soil probes and soil vapor sampling points
- Characterization and collection of soil and soil vapor samples

EMERGENCY NUMBERS

Contact	Phone Number
Lincoln Medical Center	(718) 579-5016
New York City EMS	911
NYPD	911
FDNY	911
National Response Center	800-424-8802
Poison Information Center	800-562-8816
Chemtree	800-424-9555

PROJECT MANAGEMENT/HEALTH AND SAFETY PERSONNEL

Title	Contact	Phone Number	Cell Phone
Geologist	Morgan Violette	(718) 636-0800	(631) 406-3711
Site Safety Officer	Morgan Violette	(718) 636-0800	(631) 406-3711
Project Manager	Morgan Violette	(718) 636-0800	(631) 406-3711

Directions to Lincoln Medical Center, located at 234 East 149th Street (see attached **Figure 1***)*

Head northwest on East 138th Street toward Canal Place. Turn right onto Park Avenue. Turn right onto East 149th Street. Destination will be on the right in 328 feet.

2.0 Health and Safety Staff

This section briefly describes the personnel and their health and safety responsibilities for the:

PROJECT Geologist– Morgan Violette

- Has the overall responsibility for the health and safety of site personnel
- Ensures that adequate resources are provided to the field health and safety staff to carry out their responsibilities as outlined below.
- Ensures that fieldwork is scheduled with adequate personnel and equipment resources to complete the job safely.
- Ensures that adequate telephone communication between field crews and emergency response personnel is maintained.
- Ensures that field site personnel are adequately trained and qualified to work at the Site.

SITE SAFETY OFFICER – Morgan Violette

- Directs and coordinates health and safety monitoring activities.
- Ensures that field teams utilize proper personal protective equipment (PPE).
- Conducts initial onsite, specific training prior to personnel and/or subcontractors proceeding to work.
- Conducts and documents periodic safety briefings; ensures that field team members comply with this HASP.
- Completes and maintains Accident/Incident Report Forms.
- Notifies Hydro Tech corporate administration of all accidents/incidents.
- Determines upgrade or downgrade of PPE based on site conditions and/or downgrade of PPE based on site conditions and/or real-time monitoring results.
- Ensures that monitoring instruments are calibrated daily or as determined by manufactured suggested instructions.
- Maintains health and safety field log books.
- Develops and ensures implementation of the HASP.
- Approves revised or new safety protocols for field operations.
- Coordinates revisions of this HASP with field personnel and the SSO Division Contracting Officer.
- Responsible for the development of new company safety protocols and procedures and resolution of any outstanding safety issues which may arise during the conduction of site work.
- Reviews personnel and subcontractors current and up-to-date medical examination and acceptability of health and safety training.

FIELD PERSONNEL AND SUBCONTRACTORS (IF ANY)

- Reports any unsafe or potentially hazardous conditions to the SSO.
- Maintains knowledge of the information, instructions and emergency response actions contained in this HASP.
- Comply with rules, regulations and procedures as set forth in this HASP and any revisions that are instituted.
- Prevents admittance to work sites by unauthorized personnel.

3.0 Chemical & Waste Description/Characterization

The following suspect chemicals are likely to be identified during the soil vapor sampling at the Site:

- Volatile Organic Compounds

Attachment A contains information regarding assessing health risks from chemicals of concern, which are suspected to be identified at the Site.

The following information references are presented in order to identify the properties and hazards of the materials that may/will be encountered at the Site.

- Dangerous Properties of Industrial Materials - Sax
- Chemical Hazards of the Workplace - Proctor/Hughes
- Condensed Chemical Dictionary – Hawley
- Rapid Guide to Hazardous Chemical in the Workplace - Lewis 1990.
- NIOSH Guide to Chemical Hazards - 1990
- ACGIH TLV Values and Biological Exposure Indices - 1991-1992

4.0 Hazard Assessment

The potential hazards associated with planned site activities include chemical, physical and biological hazards. This section discusses those hazards that are anticipated to be encountered during the activities listed in the scope of work.

The potential to encounter chemical hazards is dependent upon the work activity performed (invasive or non-invasive), the duration and location of the work activity. Such hazards could include inhalation or skin contact with chemicals that could cause: dermatitis, skin burn, being overcome by vapors or asphyxiation. In addition, the handling of contaminated materials and chemicals could result in fire and/or explosion.

The potential to encounter physical hazards during site work includes: heat stress, exposure to excessive noise, loss of limbs, being crushed, head injuries, cuts and bruises and other physical hazards due to motor vehicle operation, heavy equipment and power tools.

CHEMICAL HAZARDS

The potential for personnel and subcontractors to come in contact with chemical hazards may occur during the following tasks:

- Installation of soil vapor sampling points

Exposure Pathways
Exposure to these compounds during ongoing activities may occur through inhalation of contaminated dust particles, inhalation of volatile (VOC) vapor fume compounds, by way of dermal absorption, and accidental ingestion of the contaminant by either direct or indirect cross contamination activities (eating, smoking, poor hygiene). Indirectly, inhalation of contaminated dust particles (metals, silica, VOCs) can occur during adverse weather conditions (high or changing wind directions) or during operations that may generate airborne dust such as excavation, and sampling activities. Dust control measures such as applying water to roadways and work sites will be implemented, where visible dust is generated from non-contaminated and contaminated soils. Where dust control measures are not feasible or effective, respiratory protection will be used.

Additional Precautions
Dermal absorption or skin contact with chemical compounds is possible during invasive activities at the Site, including removal of product, excavation of tanks, and handling of contaminated soils. The use of PPE in accordance with Section 7.0 and strict adherence to proper decontamination procedures should significantly reduce the risk of skin contact.

The potential for accidental ingestion of potentially hazardous chemicals is expected to be remote, when good hygiene practices are used.

PHYSICAL HAZARDS

A variety of physical hazards may be present during Site activities. These hazards are similar to those associated with any construction type project. These physical hazards are due to motor vehicles, and heavy equipment operation, the use of improper use of power and hand tools, misuse of pressurized cylinders, walking on objects, tripping over objects, working on surfaces which have the potential to promote falling, mishandling and improper storage of solid and hazardous materials, skin burns, crushing of fingers, toes, limbs, hit on the head by falling objects or hit one's head due to not seeing the object of concern, temporary loss of one's hearing and/or eyesight. Theses hazards are not unique and are generally familiarly to most hazardous waste site workers at construction sites. Additional task specific safety requirements will be covered during safety briefings.

Noise

Noise is a potential hazard associated with operation of heavy equipment, power tools, pumps and generators. High noise operators will be evaluated at the discretion of the SSO. Employees with an 8-hour time weighted average exposure exceeding 85 decibels (db) will be included in the hearing conservation program in accordance with 29 CFR 1910.85.

It is mandated that employees working around heavy equipment or using power tools that dispense noise levels exceeding 95 db are to wear hearing protection that shall consist of earplugs and earphones. This is particularly relevant as the jet engines of modern airplanes can give sound level readings of greater than 110 db.

Heat/Cold Stress

Extremes in temperature and the effects of hard work in impervious clothing can result in heat stress and/or hypothermia. The human body is designed to function at a certain internal temperature. When metabolism or external sources (fire, hot summer day, winter weather, etc.) cause the body temperature to rise or fall excessively, the body seeks to protect itself by triggering cooling/warming mechanisms. Profuse sweating is an example of a cooling mechanism, while uncontrollable shivering is an example of a warming mechanism. The SSO monitor the temperature to determine potential adverse effects the weather can cause on site personnel.

Protective clothing worn to guard against chemical contact effectively stops the evaporation of perspiration. Thus the use of protective clothing increases heat stress problems. Cold stress can easily occur in winter with sub-freezing ambient temperatures. Workers in protective garments may heat-up and sweat, only to rapidly cool once out of the tank and the PPE. The major disorders due to heat stress are heat cramps, heat exhaustion and heat stroke.

HEAT CRAMPS are painful spasms that occur in the skeletal muscles of workers who sweat profusely in the heat and drink large quantities of water, but fail to replace the body's lost salts or electrolytes. Drinking water while continuing to lose salt tends to dilute the body's extra cellular fluids. Soon water seeps by osmosis into active muscles and causes pain. Muscles fatigued from work as usually most susceptible to cramps.

HEAT EXHAUSTION is characterized by extreme weakness or fatigue, dizziness, nausea, and headache. In serious cases, a person may vomit or lose consciousness. The skin is clammy and moist, complexion pale or flushed, and body temperature normal or slightly higher than normal. Treatment is rest in a cool place and replacement of body water lost by perspiration. Mild cases may recover spontaneously with this treatment; severe cases may require care for several days. There are no permanent effects.

HEAT STROKE is a very serious condition caused by the breakdown of the body's heat regulating mechanisms. The skin is very dry and hot with red mottled or bluish appearance. Unconsciousness, mental confusion or convulsions may occur. Without quick and adequate treatment, the result can be death or permanent brain damage. Get medical assistance quickly! As first aid treatment, the person should be moved to a cool place. Soaking the person's clothes with water and fanning them should reduce body heat artificially, but not too rapidly.

Steps that can be taken to reduce heat stress are:

- Acclimatize the body. Allow a period of adjustment to make further heat exposure endurable.
- Drink more liquids to replace body water lost during sweating.
- Rest is necessary and should be conducted under the monitoring condition from the SSO and the effect personnel physiological state.
- Wearing personal cooling devices. There are two basic designs; units with pockets for holding frozen packets and units that circulate a cooling fluid from a reservoir through tubes to different parts of the

body. Both designs can be in the form of a vest, jacket or coverall. Some circulating units also have a copy for cooling the head.

Cold temperatures can cause problems. The severe effects are FROSTBITE and HYPOTHERMIA.

FROSTBITE is the most common injury resulting from exposure to cold. The extremities of the body are often affected. The signs of frostbite are:

- The skin turns white or grayish-yellow
- Pain is sometimes felt early but subsides later. Often there is no pain
- The affected part feels intensely cold and numb

Shivering, numbness, drowsiness, muscular weakness and a low internal body temperature characterize the condition known as HYPOTHERMIA. This can lead to unconsciousness and death. With both frostbite and hypothermia, the affected areas need to be warmed quickly. Immersing in warm, not hot, water best does this. In such cases medical assistance will be sought.

To prevent these effects from occurring, persons working in the cold should wear adequate clothing and reduce the time spent in the cold area. The field SSO, to determine appropriate time personnel may spend in adverse weather conditions, will monitor this.

Lockout/Tagout

PURPOSE -- This program establishes procedures for de-energizing, isolating and ensuring the energy isolation of equipment and machinery. The program will be used to ensure that equipment and machinery is de-energizing and isolated from unexpected energization by physically locking (Lockout) energy isolation devices or, in the absence of locking capabilities, tagout (Tagout) the device to warn against energization. These procedures will provide the means of achieving the purpose of this program, prevention of injury to Hydro Tech employees from the unexpected energization or start-up of equipment and machinery, or from the release of stored energy.

APPLICATION -- This program applies to the control of energy during the servicing and/or maintenance of equipment and machinery. This program covers normal operations only if a guard or other safety device is removed or bypassed, or any part of the body is placed into an area of the equipment or machinery where work is performed on the material, or a danger zone exists during the operating cycle. Minor tool changes, adjustments, and other minor servicing activities which take place during normal production operations do not require isolation and lockout/tagout if they are routine and integral to the use of the equipment.

SCOPE -- This program will include all employees whose duties require them to service, install, repair, adjust, lubricate, inspect or perform work on powered equipment or machinery that may also have the potential for stored energy.

PROGRAM RESPONSIBILITIES -- The SSO will have the overall responsibility of the program to ensure that; authorized and affected employees receive adequate training and information, the program is evaluated annually, and the lockout/tagout equipment is properly used and the procedures of this program are followed.

The program evaluation will be conducted to ensure that the procedures and requirements of the program are being followed and will be utilized to correct any deviations or inadequacies that may be discovered. The evaluation will consist of one or more inspections or audits of actual lockout/tagout procedures being used to isolate equipment. A review of the authorized and affected employee's responsibilities will be conducted at the time of the inspection /audit. Any authorized employee, except the one(s) utilizing the energy isolation procedure being inspected, may perform the inspection/audit.

A record will be maintained of program evaluation inspections and will include:

1. The identity of the equipment or machine on which energy control procedures were being utilized.
2. The date(s) of the inspection(s).
3. The employee(s) included in the inspection(s).
4. The person performing the inspection.

Authorized employees (persons who implement lockout/tagout procedures) will be responsible for following the procedures established by this program.

Affected employees are responsible for understanding the significance of a lockout/tagout device and the prohibition relating to attempts to restart or re-energize equipment or machinery that is locked out or tagged out.

TRAINING – Where applicable, Hydro Tech employees will be provided instruction in the purpose and functions of the energy control program to ensure that they understand the significance of locked or tagged out equipment and also have the knowledge and skill to correctly apply and remove energy controls. Training will include:

The recognition of applicable hazardous energy source(s), the type and magnitude of energy available, and the policies and procedures of the Hydro Tech energy control program.

1. Affected employees will be made aware of the purpose and use of energy control procedures and the prohibition relating to attempts to remove lockout or tagout devices.
2. Instruction in the limitations of tagout as a sole means of energy control.
   a. Tags are warning devices and <u>do not</u> provide the physical restraint that a lock would.
   b. Tags may provide a false sense of security.
   c. Tags may become detached during use.

Initial training will be provided during to energy control program implementation, when new employees are hired or when job responsibilities change to include utilization of energy control procedures.

Retraining will be conducted whenever there is a change in job assignments that require the employee to utilize energy control procedures, a change in equipment that presents a new hazard, a change in the energy control procedures or when the program evaluation identifies inadequacies in the energy control program procedures.

Records of employee training will be maintained and will include the employee's name and date(s) of training.

STANDARD OPERATING PROCEDURES –where necessary, Hydro Tech will provide the necessary devices to effectively lockout or tagout energy isolating devices. Lockout/tagout devices will be the only devices used for controlling energy and shall not be used for other purposes. Any device used for lockout/tagout will be capable of withstanding the environment to which they are exposed for the maximum period they are to be exposed. The devices will be substantial enough to prevent removal without excessive force. Excessive force for a locking device would be bolt cutters or other metal cuttings tools. Tagout devices will be attached by a non-reusable method, attachable by hand, and very difficult to remove by hand. A nylon cable tie or equivalent will be used.

Lockout/tagout devices will indicate the identity of the employee who applied the device, and the tagout device will warn against the hazards if the equipment is energized.

Lockout is the preferred method of energy isolation. When physical lockout is not possible, the energy isolation will be tagged out of service with a warning tag attached at the power source. In the case of plug-in power source, the tag will be attached at the male plug. To ensure full employee protection using tagout

instead of lockout, additional steps should be taken to guard against accidental or inadvertent energization. These steps may include, where applicable: removal of fuses, blocking switches, removal of a valve handle.

STANDARD OPERATING PROCEDURES

I. APPLICATION OF CONTROLS

A. Preparing to Shut Down Equipment

1. Prior to equipment shutdown, the authorized employee(s) must have knowledge of:
    a. The type(s) and magnitude of power.
    b. The hazards of the energy to be controlled.
    c. The method(s) to control the energy.
    d. The location and identity of all isolating devices that control or feed the equipment to be locked/tagged out.
2. Notify all affected employees that the lockout/tagout system will be in effect.
3. Assemble applicable lockout/tagout devices, i.e., padlocks, tags, multiple lock hasps, etc.

B. Equipment Shutdown and Isolation

1. If equipment is in operation, shut it down by the normal stopping procedure (stop button, switch).
2. Operate disconnects, switches, valves, or other energy isolating devices so that the equipment is de-energizing and isolated from its energy source(s).
3. Verify that equipment is shut down by operating equipment from the normal operating location and any remote locations.

C. Installation of Lockout/Tagout Device, Release of Stored Energy, and Verification

1. Attach individually assigned lock(s) or tag(s) to energy isolating device(s). Where it is not possible to lock a switch, valve or other isolating device, electrical fuses must be removed, blank flanges installed in piping, lines disconnected, or other suitable methods used to ensure that equipment is isolated from energy sources. A tag must be installed at the point of power interruption to warn against energizing.
    a. Each lock or tag must positively identify the person who applied it and locks must be individually keyed.
    b. If more than one person is involved in the task, employees will place their own lock and tag. Multiple lock hasps are available for this.
2. Release, restrain, or dissipate stored energy such spring tension, elevated machine members, rotating flywheels, hydraulic pressure, pistons and air, gas, steam, water pressure, etc. by repositioning, blocking bleeding, or other suitable means.
3. Prior to starting work on equipment and after ensuring that no personnel are exposed, the authorized employee will verify that isolation and de-energization have been accomplished by:
    a. Attempting, through normal effort, to operate energy isolating devices such as switches, valves, or circuit breaker with locks or tags installed.
    b. Attempting to operate the equipment or machinery that is locked or tagged out. This includes all sources of energy, i.e. electrical, hydraulic, gravity, air, water, stream pressure, etc.
    c. Verifying the presence and effectiveness of restraint (blocking) and energy dissipation or release (bleeding).
4. If there is a possibility of the re-accumulation of stored energy to a hazardous level, verification of isolation will be contained until the servicing or maintenance is completed, or until the possibility of such accumulation no longer exists.

D. Group Lockout/Tagout

1. When more than one individual is involved in locking or tagging equipment out of operation, each individual will attach their individual lock or tag, or the equivalent, to the energy isolating device(s).

a. An equivalent lockout device may be in the form of a group lockout device such as a multiple lock hasp or lock box.
b. Primary responsibility for a group of authorized employees working under a group lockout device will be vested in a designated authorized employee.
c. Group lockout methods will provide a level of protection equal to that afforded by a personal lockout/tagout device.

II. RETURNING EQUIPMENT TO SERVICE

A. Restore Equipment to Normal Operating Status

1. Re-install all parts or subassemblies removed for servicing or maintenance.
2. Re-install all tools, rests, or other operating devices
3. Re-install all guards and protective devices (i.e. limit switches).
4. Remove all blocks, wedges, or other restraints from the operating area of the equipment (ways, slides, etc.).
5. Remove all tools, equipment, and shop towels from the operating area of the equipment.

B. Verify Equipment Ready for Operation

1. Inspect area for non-essential items
2. Ensure that all employees are safely positioned clear of the operating areas of the equipment. Post a watch if energy isolation devices are not in line of sight of the equipment.

C. Notify Affected Employees of Impending Start-up

1. The sudden noise of start-up may startle nearby employees.
2. Equipment may need to be tested to determine operational safety by a qualified operator.

D. Remove Energy Isolation Devices - Only by authorized employee(s) who installed it/them.

1. Remove line blanks, reconnect piping (if applicable), and remove warning tag.
2. Close bleeder valves, remove warning tag.
3. Replace fuse(s), close circuit breaker(s) and remove warning tag.
4. Remove lock and tag from control panel, valve, etc.

Employee(s) who installed them may make an exception for removal of lockout/tagout devices. If it is necessary to operate a piece of equipment that is locked/tagged out, <u>every</u> effort must be made to locate the employee whose lock or tag is on the equipment. If he or she cannot be located and only after positive assurance is made that no one is working on the locked out equipment, the <u>supervisor</u> may personally remove the lock. The supervisor must assure that the equipment is once again locked out, or the employee notified that the equipment has been re-energized, before the employee resumes work. Employees will recheck locked out equipment if they have left the equipment (breaks, lunch, and end of shift) to make sure it is still de-energized and locked out.

III. TEMPORARY REMOVAL OF LOCKOUT/TAGOUT PROTECTION

A. In situations when the equipment must be temporarily energized to test or position the equipment or its components, the following steps will be followed:

1. Clear the equipment of tools and materials that are non-essential to the operation.
2. Ensure the equipment components are operationally intact.
3. Remove employees from the equipment area.
4. Remove the lockout/tagout devices by the employee who installed in/them.
5. Energize and proceed with testing or positioning.

6. De-energize all systems and re-install all energy control measures.
7. Verify re-installed energy control measures are effective.

IV. SHIFT OR PERSONNEL CHANGES

A. The following steps will be followed to ensure continuity of employee protection during personnel changes.

1. All personnel involved in the maintenance or servicing activity will be notified that a transfer of personal locks/tags is about to occur.
2. Clear all personnel from hazardous area(s) of equipment.
3. Under the supervision of the shift supervisor or group designee, the off-going employee will immediately install theirs.
    a. If an entire group or more than one employee will be transferring work responsibility, locks/tags will be removed and replaced one at a time in order of installation.
4. When the transfer of lockout/tagout devices is complete, the effectiveness of all energy isolation devices will be verified to the satisfaction of all personnel involved.
5. Once the effectiveness of energy isolation protection is confirmed, the service/maintenance operation may continue.

V. CONTRACTOR NOTIFICATION

A. Whenever outside personnel may be engaged in activities covered by this program, they will inform the contractor of applicable lockout/tagout procedures used to protect Hydro Tech employees from the hazards of working near energized equipment.

1. The contractor will be expected to ensure that his/her employees understand and comply with the restrictions and prohibitions of this program.
2. Hydro Tech requires, under these circumstances, the contractor to inform us of their lockout/tagout procedures so that HTE employees can comply with the restrictions and prohibitions of the contractor's program.
3. Hydro Tech also requires the contractor to notify the program administrator, the area supervisor, and affected Hydro Tech employees prior to de-energizing, isolating and locking out Hydro Tech equipment. Conversely, notification is also required when this equipment will be returned to service.

DEFINITIONS

Affected employee - An employee whose job requires him/her to operate or use a machine or equipment on which servicing or maintenance is being performed under lockout or tagout, or whose job requires him/her to work in an area in which such servicing or maintenance is being performed.

Authorized employee(s) - A person or persons who locks or implements a tagout system procedure to perform servicing or maintenance on a machine or equipment. An authorized employee and an affected employee may be the same person when the affected employee's duties also include performing maintenance or service on a machine or equipment that must be locked or tagged out.

"Capable of being locked out" - An energy isolating device will be considered to be capable of being locked out either if it is designed with a hasp or other attachment or integral part to which, or through which, a lock can be affixed, or if it has a locking mechanism built into it. Other energy isolating devices will also be considered to be capable of being locked out, if lockout can be achieved without the need to dismantle, rebuild, or replace the energy-isolating device or permanently alter its energy control capability.

Energized - Connected to an energy source or containing residual or stored energy.

Energy isolating device - A mechanical device that physically prevents the transmission or release of energy, including but not limited to the following: a manually operated electrical circuit breaker; a disconnect switch; a manually operated switch by which the conductors of a circuit can be disconnected from all ungrounded supply conductors and, in addition, no pole can be operated independently; a slide gate; a slip blind; a line valve; a block; and any similar device used to block or isolate energy. The term does not include a push button, selector switch, and other control circuit type devices.

Energy source - any source of electrical, mechanical, hydraulic, pneumatic, chemical, thermal or other type of energy.

Lockout - The placement of lockout device on an energy-isolating device, in accordance with an established procedure, is ensuring that the energy isolating device and the equipment being controlled cannot be operated until the lockout device is removed.

Lockout device - A device that utilizes positive means such as a lock, either key or combination type, to hold an energy isolating device in the safety position and prevent the energizing of a machine or equipment.

Normal production operations - The utilization of a machine or equipment to perform its intended production function.

Servicing and/or maintenance - Workplace activities such as constructing, installing, setting up, adjusting, inspecting, modifying, and maintaining and/or servicing machines or equipment. These activities include lubrication, cleaning or unjamming of machines or equipment and making adjustments or tool changes, where the employee may be exposed to the unexpected energization or startup of the equipment or release of hazardous energy.

Setting up - Any work performed to prepare a machine or equipment to perform its normal production operation.

Stored energy - Energy that is available and may cause movement even after energy sources have been isolated. Stored energy may be in the form of compressed springs, elevated equipment components, hydraulic oil pressure, pressurized water, air, steam, or gas, or rotating flywheels, shafts or cams.

Tagout - The placement of a tagout device on an energy-isolating device, in accordance with an established procedure, to indicate that the energy isolating device and the equipment being controlled may not be operated until the tagout device is removed.

Tagout device - A prominent warning device, such as a tag and a means of attachment, which can be securely fastened to an energy isolating device in accordance with an established procedure, to indicate that the energy isolating device and the equipment being controlled may not be operated until the tagout device is removed.

GENERAL MACHINERY AND EQUIPMENT LIST

EQUIPMENT/LOCATION	ENERGY SOURCES/LOCATION
A. Backhoe Machine	Diesel Engine

5.0 Training

GENERAL HEALTH AND SAFETY TRAINING

In accordance with Hydro Tech corporate policy, and pursuant to 29 CFR 1910.120, hazardous waste site workers shall, at the time of job assignment, have received a minimum of 40 hours of initial health and safety training for hazardous waste site operations. As a minimum, the training shall have consisted of instruction in the topics outlined in the above reference. Personnel who have not met the requirements for initial training will not be allowed to work in any site activities in which they may be exposed to hazards (chemical or physical).

Completion of the Hydro Tech Health and Safety Training Course for Hazardous Waste Operations or an approved equivalent will fulfill the requirements of this section. In addition to the required initial training, each employee shall have received 3 days of directly supervised on-the-job training. This training will address the duties the employees are expected to perform.

The Hydro Tech SSO the responsibility of ensuring that personnel assigned to this project complies with these requirements. Written certification of completion of the required training will be provided to the SSO.

MANAGER/SUPERVISOR TRAINING

In accordance with 29 CFR 1910.120, onsite management and supervisors who will be directly responsible for, or who supervise employees engaged in hazardous waste operation shall receive training as required in this HASP and at least eight (8) additional hours of specialized training on managing such operations at the time of job assignment.

ANNUAL 8-HOUR REFRESHER TRAINING

Annual 8-hour refresher training will be required of all hazardous waste site field personnel in order to maintain their qualification for fieldwork. The following topics will be reviewed: toxicology, respiratory protection, including air purifying devices and self-contained breathing apparatus (SCBA), medical surveillance, decontamination procedures and personnel protective clothing. In addition, topics deemed necessary by the SSO may be added to the above list.

SITE SPECIFIC TRAINING

Prior to commencement of field activities, all personnel assigned to the project will be provided training that will specifically address the activities, procedures, monitoring and equipment for the site operations. It will include Site and facility layout, hazards, and emergency services at the Site, and will highlight all provisions contained within this HASP. This training will also allow field workers to clarify anything they do not understand and to reinforce their responsibilities regarding safety and operations for their particular activity.

ONSITE SAFETY BRIEFINGS

Project personnel and visitors will be given periodic onsite health and safety briefings by the SSO, or their designee, to assist site personnel in safely conducting their work activities. The briefings will include information on new operations to be conducted, changes in work practices or changes in the Site's environmental conditions. The briefings will also provide a forum to facilitate conformance with safety requirements and to identify performance deficiencies related to safety during daily activities or as a result of safety audits.

ADDITIONAL TRAINING

Additional training may be required by the SSO for participation in certain field tasks during the course of the project. Such additional training could be in the safe operation of heavy or power tool equipment or hazard communication training.

SUBCONTRACTOR TRAINING

Subcontractor personnel who work onsite only occasionally, for a specific limited task and who are unlikely to be exposed over permissible exposure limits, may be exempted from the initial 40-hour training requirement. The SSO will determine if this exemption is allowed. In any case, the subcontractor personnel who are exposed to hazards are not exempted from the 40-hours training requirement nor medical surveillance requirements found in Section 8.1.

6.0 Medical Surveillance

GENERAL

All contractor and subcontractor personnel performing field work at the Site are required to have passed a complete medical surveillance examination in accordance with 29 CFR 1910.120 (f). A physician's medical release for work will be confirmed by the SSO before an employee can begin site activities. Such examinations shall include a statement as to the worker's present health status, the ability to work in a hazardous environment (including any required PPE which may be used during temperature extremes), and the worker's ability to wear respiratory protection.

A medical data sheet will be completed by all onsite personnel and kept at the Site. Where possible, this medical data sheet will accompany the personnel needing medical assistance or transport to hospital facilities.

MEDICAL SURVEILLANCE PROTOCOL

The medical surveillance protocol to be implemented is the occupational physicians' responsibility, but shall meet the requirements of CFR 1910.120 and ANSI Z88.2 (1980). The medical surveillance protocol shall, as a minimum, cover the following:

a. Medical and Occupational History
b. General physical examination (including evaluation of major organ system)
c. Serum lead and ZPP
d. Chest X-ray (performed no more frequently that every four years, except when otherwise indicated).
e. Pulmonary Function Testing (FVC and FEV1.0).
f. Ability to wear respirator
g. Audiometric testing.

Additional clinical tests may be included at the discretion of the occupational physician.

7.0 Site Control, PPE & Communications

SITE CONTROL

A Support Zone (SZ) is an uncontaminated area that will be the field support area for most operations. The SZ provides for field team communications and staging for emergency response. Appropriate sanitary facilities and safety equipment will be located in this zone. Potentially contaminated personnel or materials are not allowed in this zone. The only exception will be appropriately packaged/decontaminated and labeled samples. A contamination reduction corridor will be established. This is the route of entry and egress to the Site, and it provides an area for decontamination of personnel and portable equipment as well.

The area where contamination exists is considered to be the Exclusion Zone (EZ). All areas where excavation and handling of contaminated materials take place are considered the EZ. This zone will be clearly delineated by cones, tape or other means. The SSO may establish more than one EZ where different levels of protection may be employed or where different hazards exist. Personnel are not allowed in the EZ without:

- A buddy
- Appropriate personal protective equipment
- Medical authorization
- Training certification

PERSONAL PROTECTIVE EQUIPMENT

GENERAL

The level of protection worn by field personnel will be enforced by the SSO. Levels of protection for general operations are provided below and are defined in this section. Levels of protection may be upgraded or downgraded at the discretion of the SSO. The decision shall be based on real-time air monitoring, site history data, and prior site experience. Any changes in the level of protection shall be recorded in the health and safety field logbook.

PERSONAL PROTECTIVE EQUIPMENT SPECIFICATIONS

For tasks requiring Level B PPE, the following equipment shall be used:

- Cotton or disposable coveralls
- Chemical protective suit (e.g. Saran-coated Tyvek®)
- Gloves, inner (latex)
- Gloves, outer (Nitrile®)
- Boots (PVC), steel toe/shank
- Boot Covers (as needed)
- Hard Hat
- Hearing protection (as needed)

For tasks requiring Level C PPE, the following equipment shall be used:

- Cotton or disposable coveralls
- Disposable outer coveralls (Poly-coated Tyvek)
- Gloves, inner (latex)
- Gloves, outer (Nitrile®)
- Boots (PVC), steel toe/shank
- Boot covers (as needed)
- Hard Hat
- Hearing protection (as needed)
- Splash suit and face shield for decontamination operations (as needed)

For tasks requiring Level D PPE, the following equipment shall be used:

- Cotton or disposable coveralls
- Gloves, inner (latex)
- Gloves, outer (Nitrile®)
- Boots (PVC) steel toe/shank
- Boot covers (as needed)
- Hard hat
- Hearing protection (as needed)
- Safety glasses

For tasks requiring respiratory protection, the following equipment shall be used:

Level D - No respiratory protective equipment necessary except for a dust mask
Level C - A full-face air-purifying respirator equipped with organic vapor/pesticide-HEPA cartridges
Level B - An air line respirator or a self-contained breathing apparatus (SCBA)

INITIAL LEVELS OF PROTECTION
Levels of protection for the activities may be upgraded or downgraded depending on direct-reading instruments or personnel monitoring. The following are the initial levels of protection that shall be used for each planned field activity.

LEVEL OF PERSONAL PROTECTIVE EQUIPMENT REQUIRED

Activity	**Level of Protection Respiratory/PPE**
Drilling/Coring	C/D
Sampling	C/D
Ground-Penetrating Radar/Magnetometer	C/D

COMMUNICATIONS
Communications is the ability to talk with others. While working in Level C/B Protection, personnel may find that communication becomes a more difficult task and process to accomplish. This is further complicated by distance and space. In order to address this problem, electronic instruments, mechanical devices or hand signals will be used as follows:

- Walkie-Talkies - Hand held radios would be utilized as much as possible by field teams for communication between downrange operations and the Command Post base station.

- Telephones - A mobile telephone will be located in the Command Post vehicle in the Support Zone for communication with emergency support services/facilities. If a telephone is demobilized, the nearest public phones will be identified.

- Air Horns - A member of the downrange field team will carry an air horn and another will be evident in the Support Zone to alert field personnel to an emergency situation.

- Hand Signals - Members of the field team long with use of the buddy system will employ this communication method. Signals become especially important when in the vicinity of heavy moving equipment and when using Level B respiratory equipment. The signals shall become familiar to the entire field team before site operations commence and they will be reinforced and reviewed during site-specific training.

HAND SIGNALS FOR ONSITE COMMUNICATION

Signal	**Meaning**
Hand gripping throat	Out of air, can't breathe
Grip partners' wrist	Leave area immediately; no debate
Hands on top of head	Need assistance
Thumbs up	OK, I'm all right; I understand
Thumbs down	No; negative, unable to understand you. I'm not all right

8.0 Air Monitoring Plan

GENERAL

Continuous air monitoring in the EZ during invasive tasks will accompany site operations, as indicated in this HASP or as required by the SSO. Monitoring will be performed to verify the adequacy of respiratory protection, to aid in site layout and to document work exposure. All monitoring instruments shall be operated by qualified personnel only and will be calibrated daily prior to use, or more often as necessary.

REAL-TIME MONITORING

INSTRUMENTATION

At least one (1) of the following monitoring instruments will be available for use during field operations as necessary:

- Photoionization Detector (PID), Rae Instruments with 10.2 EV probe or equivalent
- Flame Ionization Detector (FID), Foxboro Model 128 or equivalent
- Combustible Gas Indicator (CGI)/Oxygen (O_2) Meter, MSA or equivalent.

A FID or PID shall be used to monitor the organic vapor concentrations in active work areas. Organic vapor concentrations shall be measured upwind of the work areas to determine background concentrations. The SSO will interpret monitoring results using professional judgment. The PPE utilized shall always be the most protective, thus the action level criteria are flexible guidelines.

A CGI/O_2 meter shall be used to monitor for combustible gases and oxygen content in the boreholes during drilling activities.

Calibration records shall be documented, and included in the health and safety logbook or instrument calibration logbook. All instruments shall be calibrated before and after each daily use in accordance with the manufacturers' procedures.

ACTION LEVELS

Action levels for upgrading of PPE in this HASP will apply to all site work during the duration of field activities at the Site. Action levels are for unknown contaminants using direct reading in the Breathing Zone (BZ) for organic vapors and dusts, and at the source for combustible gases.

MONITORING DURING FIELD ACTIVITIES

Hydro Tech shall perform real time air monitoring prior to the commencement of work to establish baseline conditions. Baseline conditions will be established at the approximate center of the Site and at the perimeter of the Site both upwind and downwind.

During all work activities real time monitoring will occur. As necessary, Hydro Tech shall have at each applicable workstation a PID, explosimeter and oxygen deficiency meter. The real time monitoring for remedial activities will be conducted approximating the Breathing Zone of the workers. The monitoring will be continuous during working operations.

The air-monitoring instrument may indicate that personnel working in the exclusion zone increase their level of protection. All personnel will be trained in the action levels. When conditions warrant an increase in protection, all personnel will stop working and immediately leave the exclusion zone. They will then don the appropriate safety equipment necessary and return to their current workstation. All of this activity will be monitored by the SSO. The SSO will keep the Hydro Tech Project Manager aware of any extraordinary situations and conditions that may occur. Working conditions and monitoring levels will be noted in the

Field Notebook along with the time, date and page number. Verbal reports will be given to the Project Manager when there is a change in the PPE level.

The previous day's results shall be reviewed each morning to determine what actions are necessary and the general conditions resulting from and around the Site.

The record keeping will include:

- Date & Time of Monitoring
- Air Monitoring Location
- Instrument, Model #, Serial #
- Calibration/Background Levels
- Results of Monitoring
- SSO Signature
- Comments

Excavation Operations - Monitoring will be performed continuously during all excavation and demolition operations. A PID and/or FID shall be utilized to monitor the breathing zone, the excavated area and any material taken from the excavation. A CGI/O_2 meter shall be used to monitor the excavation for the presence of combustible gases.

ACTION LEVELS OF AIRBORNE CONTAMINANTS

Instrument	Action Level	Action to be Taken
FID/PID	< 100 ppm, for a 15-minute average	Stop work & initiate vapor control
	>100 ppm, for a 15-minute average	Stop work & initiate evacuation procedure
CGI	10% LEL	Stop work, initiate ventilating
	50% LEL	Stop work, initiate evacuation procedure and contact fire dept.

PERSONNEL MONITORING PROCEDURE

The Site SSO, concurrent with activities that may generate the contaminants in excess of OSHA PEL's, may perform assessment and evaluation of field personnel exposures to airborne contaminants.

Procedures to be followed include:

The SSO may select high-risk individuals who may be subject to contaminant exposure based on job assignment.
The Personal Sampling is being conducted to determine the proper levels of respiratory protection required, to document potential exposures to compounds, and to assure compliance with OSHA standards. Therefore, it is important that the data collected be from "worst case" locations and personnel.

For example: when work is being conducted to excavate at an underground tank location, those persons closest to the excavation and most intimately involved with the work should be sampled. If a backhoe operator solely conducted the excavation, then that employee should be monitored. However, if there are additional workers who must enter the excavation and work with the freshly excavated soil, these persons would be closer to the potential contaminants and they should be sampled.

To meet the intent of the sampling will require sampling at periods of the most disturbances. To be accurate in determining potential exposures, as many tasks/trades shall be sampled as possible during the course of this project. At completion of the project, a goal of 20% of all workers who must perform their duties in or around the contaminated soil, tanks and excavations is sought.

All sampling data must be provided in writing to the employees within three (3) days of receipt of results by Hydro Tech.

Air sampling pumps used to collect employee exposure samples shall be calibrated before and after use each day. Calibration shall be accomplished using a primary standard calibration system, e.g. the bubble tube method. Results of the calibrations shall be included in the health and safety field logbook and with the exposure report.

Chemical analysis of samples collected for assessment of employee exposures shall be performed in accordance with NIOSH or OSHA analytical methods only by laboratories accredited by the American Industrial Hygiene Association.

Results of the personal exposure assessment shall be provided to the individual, in writing within fifteen (15) working days after receipt of laboratory reports. Reports to field personnel shall provide calculated time-weighted average exposures and shall provide comparative information relative to established permissible exposure limits. The air sampling data sheet and laboratory report is considered a part of the employee exposure report. A copy of the employee personal exposure assessment report shall also be included in the project file and the employees' medical record for Hydro Tech employees. Reports for subcontractor employees will be sent directly to the subcontractors' employer.

AIR MONITORING REPORTS

Air Monitoring Reports will be completed by the SSO and/or authorized personnel and submitted to the Project Manager in the daily safety logs and will include the following:

- Date of monitoring
- Equipment utilized for air monitoring
- Real-time air monitoring results from each work location
- Calibration method of equipment and results

9.0 Safety Considerations

GENERAL

In addition to the specific requirements of this HASP, common sense should be used at all times. The general safety rules and practices below will be in effect at the Site at the discretion of the Project Manager, SSO or other authorized personnel.

- The site will be suitably marked or barricaded as necessary to prevent unauthorized visitors but not hinder emergency services if needed.

- As needed, all open holes, trenches and obstacles will be properly barricaded in accordance with local site requirements. These requirements will be determined by proximity to traffic ways, both pedestrian and vehicular, and site of the hole, trench or obstacle. If holes are required to be left open during non-working hours, they will be adequately decked over or barricaded and sufficiently lighted.

- Before any digging or boring operations are conducted, underground utility locations will be identified. All boring, excavation and other site work will be planned and performed with consideration for underground lines. Any excavation work will be performed in accordance with Hydro Tech's Standard Operating Procedures for Excavations.

- Either workers or other people will enact dust-mitigating procedures when there exists the potential for the inhalation of dust particles.

- The act of smoking and ignition sources in the vicinity of potentially flammable or contaminated material is strictly prohibited.

- Drilling, boring, and use of cranes and drilling rigs, erection of towers, movement of vehicles and equipment and other activities will be planned and performed with consideration for the location, height, and relative position of aboveground utilities and fixtures, including signs; canopies; building and other structures and construction; and natural features such as trees, boulders, bodies of water, and terrain.

- When working in areas where flammable vapors may be present, particular care shall be exercised with tools and equipment that may be sources of ignition. All tools and equipment provided must be properly bonded and/or grounded. Metal buttons and zippers are prohibited on safety clothing for areas that may contain a flammable or explosive atmosphere.

- Approved and appropriate safety equipment (as specified in this HASP), such as eye protection, hard hats, foot protection, and respirators, must be worn in areas where required. In addition, eye protection must be worn when sampling soil or water that may be contaminated.

- Beards interfere with respirator fit and are not allowed within the site boundaries because all site personnel may be called upon to use respirator protection is some situations.

- No smoking, eating, chewing tobacco, gum chewing or drinking will be allowed in the contaminated areas.

- Contaminated tools and hands must be kept away from the face.

- Personnel must use personal hygiene safe guards (washing up) at the end of the shift or as soon as possible after leaving the Site.

- Each sample must be treated and handled as though it were contaminated.
- Persons with long hair and/or loose fitting clothing that could become entangled in power equipment must take adequate precautions.
- Horseplay is prohibited in the work area.
- Work while under the influence of intoxicants, narcotics or controlled substances is prohibited.

POSTED SIGNS

Posted danger signs will be used where an immediate hazard exists. Caution signs will be posted to warn against potential hazards and to caution against unsafe practices. Traffic control methods and barricades will be used as needed. Wooden stakes and flagging tape, or equally effective material will be used to demarcate all restricted areas.

Other postings may include the OSHA poster, emergency hospital route and telephone numbers of contact personnel.

INVASIVE OPERATIONS

The SSO will be present onsite during all invasive work (e.g. demolition, excavations). The SSO will ensure that appropriate levels of protection and safety procedures are followed. No personnel will enter any excavations for any reasons. All personnel will stay at least 10 feet back from the edge of the excavation and out of the swing radius of the backhoe. No drums or other potential sources will be sampled or removed during this phase without further additions to the HASP.

The proximity of water, sewer and electrical lines will be identified prior to invasive operations. The possibility of the presence of underground conduits or vessels containing materials under pressure will also be investigated prior to invasive operations. Properly-sized containment systems will be utilized and consideration of the potential volume of liquid or waste released during operations will be discussed with members of the field team to minimize the potential for spills and provide a method for collection of waste materials. Emergency evacuation procedures and the location of safety equipment will be established prior to start up operations. The use of protective clothing, especially hard hats, boots, and gloves will be required during drilling and other heavy equipment work.

SOIL AND GROUNDWATER SAMPLING

Personnel must wear prescribed protective clothing and equipment including eye protection, chemical resistant gloves and splash aprons (where appropriate) when sampling solids and liquids. Sample bottles are to be bagged prior to sampling to ease decontamination. Personnel must be aware of the location of emergency equipment, including spill containment materials prior to sampling. Personnel are to practice contamination avoidance at all times, as well as to utilize the buddy system and maintain communications with the Command Post.

SAMPLE HANDLING

Personnel responsible for the handling of samples will wear the prescribed level of protection. Samples are to be identified as to their hazard and packaged as to prevent spillage or breakage. Any unusual sample conditions shall be noted. Laboratory personnel and all field personnel shall be advised of sample hazard levels and the potential contaminants present. This can be accomplished by a phone call to the lab coordinator and/or including a written statement with the samples reviewing lab safety procedures in handling in order to assure that the practices are appropriate for the suspected contaminants in the sample.

HEAVY EQUIPMENT DECONTAMINATION

Personnel steam cleaning heavy equipment shall use the prescribed level of protection and adhere to the buddy system. Initially this task usually employs level C. The heavy equipment decontamination shall be restricted to authorized personnel only. Special consideration will be given to wind speed and direction. Downwind areas are to be kept free of personnel to avoid unnecessary exposure to potential airborne contamination.

ADDITIONAL SAFETY CONSIDERATIONS

No other additional safety considerations at this time.

10.0 Decontamination and Disposal Procedures

CONTAMINATION PREVENTION

One of the most important aspects of decontamination is the prevention of contamination. Good contamination prevention should minimize worker exposure and help ensure valid sample results by precluding cross-contamination. Procedures for contamination avoidance include:

Personnel:
Do not walk through areas of obvious or known contamination
Do not directly handle or touch contaminated materials
Make sure that there are no cuts or tears on PPE
Fasten all closures in suits; cover with tape if necessary
Particular care should be taken to prevent any skin injuries
Stay upwind of airborne contaminants
Do not carry cigarettes, cosmetics, gum, etc. into contaminated areas

Sampling and Monitoring:
When required by the SSO, cover instruments with clear plastic, leaving openings for sampling ports and bag sample containers prior to emplacement of sample material.

Heavy Equipment:
Care should be taken to limit the amount of contamination that comes in contact with heavy equipment (tires, contaminated augers). Dust control measures may be needed on roads inside the site boundaries.

PERSONNEL DECONTAMINATION

All personnel shall pass through an outlined decontamination procedure when exiting the hot zone at each location. Field washes for equipment and PPE shall be set up at each drilling location. The system will include a gross wash and rinse for all disposable clothing and boots worn in the EZ. Upon exiting the EZ, all personnel will wash their hands, arms, neck, and face before entering the Support Zone.

EQUIPMENT DECONTAMINATION

Equipment used at the Site that is potentially contaminated shall be decontaminated to prevent hazardous materials from leaving the Site. All heavy equipment will be decontaminated at the decontamination pad and inspected by the SSO and Project Manager before it leaves the Site. The decontamination area will provide for the containment of all wastewater from the decontamination process. Respirators, airline and any other personnel equipment that comes in contact with contaminated soils shall pass through a field wash.

DECONTAMINATION DURING MEDICAL EMERGENCIES

If emergency life-saving first aid and/or medical treatment are required, normal decontamination procedures may need to be abbreviated or omitted. The Site SSO or designee will accompany contaminated victims to the medical facility to advice on matters involving decontamination, when necessary. The outer garments can be removed if they do not cause delays, interfere with treatment or aggravate the problem. Respiratory equipment must always be removed. Protective clothing can be cut away. If the outer contaminated garments cannot be safely removed, a plastic barrier between the individual and clean surfaces should be used to help prevent contaminating the inside of ambulances and /or medical personnel. Outer garments are then removed at the medical facility.

No attempt will be made to wash or rinse the victim, unless it is known that the individual has been contaminated with an extremely toxic or corrosive material that could also cause severe injury or loss of life to emergency response personnel. For minor medical problems or injuries, the normal decontamination procedures will be followed. Note that heat stroke requires prompt treatment to prevent irreversible damage or death. Protective clothing must be promptly removed. Less serious forms of heat stress also require prompt attention and removal of protective clothing immediately; unless the victim is obviously contaminated, decontamination should be omitted or minimized and treatment begun immediately.

DISPOSAL PROCEDURES

A segregating system of non-hazardous waste and hazardous waste will be developed by the SSO and PM. All discarded material, waste materials or other objects shall be handled in such a way as to preclude the potential for spreading contamination, creating sanitary hazards, or causing litter to be left on site. All potentially contaminated materials, e.g. clothing, gloves, etc., will be bagged or drummed as necessary, labeled and segregated for disposal. All non-contaminated materials shall be collected and bagged for appropriate disposal as normal domestic waste.

11.0 Emergency Plan

The potential for the development of an emergency situation is low considering the low concentrations of hazardous substances at the work site. Nevertheless, an emergency situation could occur. All Hydro Tech and subcontractor field team members prior to the start of work will know the emergency plan outlined in this section. The emergency plan will be available for use at all times during site work.

Various individual site characteristics will determine preliminary actions taken to assure that this emergency plan is successfully implemented in the event of a site emergency. Careful consideration must be given to the proximity of neighborhood housing or places of employment, and to the relative possibility of site fire, explosion or release of vapors or gases that could affect the surrounding community.

The Project Manager shall make contact with local fire, police and other emergency units prior to beginning work on site. In these contacts, the Project Manager will inform the emergency units about the nature and duration of work expected to the Site and the type of contaminants and the possible health or safety effects of emergencies involving these contaminants. At this time, the Project Manager and the emergency response units shall make the necessary arrangements to be prepared for any emergencies that could occur.

The Project Manager shall implement the contingency plan whenever conditions at the Site warrant such action. The Project Manager will be responsible for coordination of the evacuation emergency treatment, and transportation of site personnel as necessary, and notification of emergency response units and the appropriate management staff.

The cases where the PM is not available, the SSO shall serve as the alternate emergency coordinator.

EVACUATION

In the event of an emergency situation, such as fire, explosion, or significant release of toxic gases, an air horn or other appropriate device will be sounded for approximately 10 second intervals indicating the initiation of evacuation procedures. All personnel will evacuate and assemble near the entrance to the site. The location shall be upwind of the Site where possible.
For efficient and safe site evacuation and assessment of the emergency situation, the Project Manager will have authority to initiate action if outside services are required. Under no circumstances will incoming personnel or visitors be allowed to proceed into the area once the emergency signal has been given. The SSO or designated SSO must ensure that access for emergency equipment is provided and that all combustion apparatuses have been shut down once the alarm has been sounded. Once the safety of all personnel is established, the Fire Department and other emergency response groups as necessary will be notified by telephone of the emergency.

POTENTIAL OR ACTUAL FIRE OR EXPLOSION

Immediately evacuate the Site (air horn will sound for 10-second intervals), notify the local fire and police departments, and other appropriate emergency response groups if an actual fire or explosion has taken place.

PERSONNEL INJURY

Emergency first aid shall be applied on site as deemed necessary. If necessary, the individual shall be decontaminated and transported to the nearest medical facility.

The ambulance/rescue squad shall be contacted for transport as necessary in an emergency. However, since some situations may require transport of an injured party by other means, the hospital route is identified below. A map to this facility provided with this HASP in Section 2.2.3.

ACCIDENT/INCIDENT REPORTING

As soon as first aid and/or emergency response needs have been met, the following parties are to be contacted by telephone:

1. Rachel Ataman - Cell phone (631) 457-0032
2. The employer of any injured worker if not an Hydro Tech employee

Written confirmation of verbal reports is to be submitted within 24 hours. The report form entitled "Accident Data Report" is to be used for this purpose. All Hydro Tech representatives contacted by telephone are to receive a copy of this report. If the employee involved is not a Hydro Tech employee, his employer shall receive a copy of this report.

For reporting purposes, the term accident refers to fatalities, lost time injuries, spill or exposure to hazardous materials (toxic materials, explosive or flammable materials).
Any information released from the health care provider, which is not deemed confidential patient information, is to be attached to the appropriate form. Any medical information that is released by patient consent is to be filed in the individuals' medical records and treated as confidential.

OVERT PERSONNEL EXPOSURE

SKIN CONTACT:	Use copious amounts of soap and water. Wash/rinse affected area thoroughly, and then provide appropriate medical attention. Eyes should be rinsed for 15 minutes upon chemical contamination.
INHALATION:	Move personnel to fresh air and if necessary, decontaminate and transport to hospital.
INGESTION:	Decontamination and transport to emergency medical facility.
PUNCTURE WOUND OR LACERATION:	Decontaminate and transport to emergency medical facility.

ADVERSE WEATHER CONDITIONS

In the event of adverse weather conditions, the SSO or designee will determine if work can continue without sacrificing the health and safety of all field workers. Some of the items to be considered prior to determining if work should continue are:

- Potential for heat stress and heat-related injuries
- Potential for cold stress and cold-related injuries
- Treacherous weather-related conditions
- Limited visibility
- Potential for electrical storms

Site activities will be limited to daylight hours and acceptable weather conditions. Inclement working conditions include heavy rain, fog, high winds, and lighting. Observe daily weather reports and evacuate if necessary in case of inclement weather conditions.

EMERGENCY RESPONSE EQUIPMENT LIST

Some or all of the following will either be available onsite or be able to be brought to the Site within a 2-hour period:

- 55 Gallon Drums
- 85 Gallon Drums
- Absorbent Pads
- Absorbent Booms
- Speedy-Dry
- Plastic Sheeting
- Hay Bales
- Pneumatic Nibbler
- Back Hoe
- Pressure Washer
- Air Compressor
- Wilden Pumps
- Equipment Storage Trailer
- Submersible Pumps
- Miscellaneous Hand Tools
- Portable Lighting

LARGE EQUIPMENT

If necessary, Hydro Tech can have the following large equipment brought to the Site within 2-hours:

- Large Vacuum Truck
- Super Sucker
- Dump Trucks
- Drill Rig
- Utility Vehicle

12.0 Logs, Reports and Record Keeping

MEDICAL AND TRAINING RECORDS

The employer keeps medical and training records. All subcontractors must provide verification of training and medical qualifications to the SSO. The SSO will keep a log of personnel meeting appropriate training and medical qualifications for site work. The log will be kept in the project file. Medical records will be maintained in accordance with 29 CFR 1910.20.

ONSITE LOG

A log of personnel onsite each day will be kept by the SSO or designee. A copy of these logs will be sent to the Hydro Tech records coordinator for data entry. Originals will be kept in the project file.

EXPOSURE RECORDS

Any personal monitoring results, laboratory reports, calculations and air sampling data sheets are part of an employee exposure record. These records will be kept in accordance with 29 CFR 1910.20. For Hydro Tech employees, the originals will be sent to the Hydro Tech records coordinator. For subcontractor employees, the original will be sent to the subcontractor employer and a copy kept in the project file.

ACCIDENT/INCIDENT REPORTS

An accident/incident report must be completed for all accidents and incidents. The originals will be sent to the appropriate Hydro Tech records coordinator for maintenance by Hydro Tech. Copies will be distributed as stated. A copy of the forms will be kept in the project file.

OSHA FORM 200

An OSHA Form 200 (Log of Occupational Injuries and Illnesses) will be kept at the Site. All recordable injuries or illnesses will be recorded on this form. At the end of the project, the original will be sent to the Hydro Tech corporate records administrator for maintenance. Subcontractor employers must also meet the requirements of maintaining an OSHA 200 form.

The Hydro Tech accident/incident report meets the requirements of the OSHA Form 101 (Supplemental Record) and must be maintained with the OSHA Form 200 for all recordable injuries or illnesses.

HEALTH AND SAFETY FIELD LOG BOOK

The SSO or designee will maintain the logbook in accordance with standard Hydro Tech procedures. Daily site conditions, activities, personnel, calibration records, monitoring results and significant events will be recorded. The original logbooks will become part of the exposure records file.

13.0 Sanitation

If sanitary sewers are not provided at the Site, provisions shall be made for access to sanitary systems by using nearby public facilities consistent with provisions of governing local ordinance codes. In the latter case, provisions are required for the removal of accumulated waste products within those units.

If a commercial/industrial laundry is used to clean or launder clothing that is potentially contaminated, they shall be informed of the potential harmful effects of exposure to hazardous substances related to the affected clothing.

Personnel and subcontractors sites shall follow decontamination procedures described in the HASP, or as directed by the SSO. This will generally include at a minimum site-specific training in shower usage and cleanup, personal hygiene requirements and the donning of protective equipment/clothing.

FIGURE 1
DIRECTIONS TO HOSPITAL

221 E 138th St
Bronx, NY 10451

Head northwest on E 138th St toward Canal Pl
335 ft

Turn right onto Park Ave
0.4 mi

Turn right onto E 149th St

Destination will be on the right
328 ft
Lincoln Medical and Mental Health Center
234 East 149th Street, Bronx, NY 10451

ATTACHMENT A
HEALTH AND SAFETY FACT SHEETS

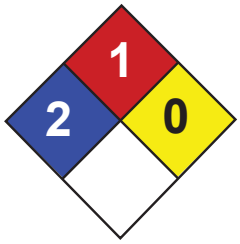

Health	2
Fire	1
Reactivity	0
Personal Protection	H

Material Safety Data Sheet
Trichloroethylene MSDS

Section 1: Chemical Product and Company Identification

Product Name: Trichloroethylene

Catalog Codes: SLT3310, SLT2590

CAS#: 79-01-6

RTECS: KX4560000

TSCA: TSCA 8(b) inventory: Trichloroethylene

CI#: Not available.

Synonym:

Chemical Formula: C2HCl3

Contact Information:

Sciencelab.com, Inc.
14025 Smith Rd.
Houston, Texas 77396

US Sales: **1-800-901-7247**
International Sales: **1-281-441-4400**

Order Online: ScienceLab.com

CHEMTREC (24HR Emergency Telephone), call: 1-800-424-9300

International CHEMTREC, call: 1-703-527-3887

For non-emergency assistance, call: 1-281-441-4400

Section 2: Composition and Information on Ingredients

Composition:

Name	CAS #	% by Weight
Trichloroethylene	79-01-6	100

Toxicological Data on Ingredients: Trichloroethylene: ORAL (LD50): Acute: 5650 mg/kg [Rat]. 2402 mg/kg [Mouse]. DERMAL (LD50): Acute: 20001 mg/kg [Rabbit].

Section 3: Hazards Identification

Potential Acute Health Effects: Hazardous in case of skin contact (irritant, permeator), of eye contact (irritant), of ingestion, of inhalation.

Potential Chronic Health Effects:
CARCINOGENIC EFFECTS: Classified + (PROVEN) by OSHA. Classified A5 (Not suspected for human.) by ACGIH. MUTAGENIC EFFECTS: Not available. TERATOGENIC EFFECTS: Not available. DEVELOPMENTAL TOXICITY: Not available. The substance is toxic to kidneys, the nervous system, liver, heart, upper respiratory tract. Repeated or prolonged exposure to the substance can produce target organs damage.

Section 4: First Aid Measures

Eye Contact:

Check for and remove any contact lenses. Immediately flush eyes with running water for at least 15 minutes, keeping eyelids open. Cold water may be used. Do not use an eye ointment. Seek medical attention.

Skin Contact:
After contact with skin, wash immediately with plenty of water. Gently and thoroughly wash the contaminated skin with running water and non-abrasive soap. Be particularly careful to clean folds, crevices, creases and groin. Cover the irritated skin with an emollient. If irritation persists, seek medical attention. Wash contaminated clothing before reusing.

Serious Skin Contact:
Wash with a disinfectant soap and cover the contaminated skin with an anti-bacterial cream. Seek medical attention.

Inhalation: Allow the victim to rest in a well ventilated area. Seek immediate medical attention.

Serious Inhalation:
Evacuate the victim to a safe area as soon as possible. Loosen tight clothing such as a collar, tie, belt or waistband. If breathing is difficult, administer oxygen. If the victim is not breathing, perform mouth-to-mouth resuscitation. Seek medical attention.

Ingestion:
Do not induce vomiting. Loosen tight clothing such as a collar, tie, belt or waistband. If the victim is not breathing, perform mouth-to-mouth resuscitation. Seek immediate medical attention.

Serious Ingestion: Not available.

Section 5: Fire and Explosion Data

Flammability of the Product: May be combustible at high temperature.

Auto-Ignition Temperature: 420°C (788°F)

Flash Points: Not available.

Flammable Limits: LOWER: 8% UPPER: 10.5%

Products of Combustion: These products are carbon oxides (CO, CO2), halogenated compounds.

Fire Hazards in Presence of Various Substances: Not available.

Explosion Hazards in Presence of Various Substances:
Risks of explosion of the product in presence of mechanical impact: Not available. Risks of explosion of the product in presence of static discharge: Not available.

Fire Fighting Media and Instructions:
SMALL FIRE: Use DRY chemical powder. LARGE FIRE: Use water spray, fog or foam. Do not use water jet.

Special Remarks on Fire Hazards: Not available.

Special Remarks on Explosion Hazards: Not available.

Section 6: Accidental Release Measures

Small Spill: Absorb with an inert material and put the spilled material in an appropriate waste disposal.

Large Spill:
Absorb with an inert material and put the spilled material in an appropriate waste disposal. Be careful that the product is not present at a concentration level above TLV. Check TLV on the MSDS and with local authorities.

Section 7: Handling and Storage

Precautions:
Keep locked up Keep away from heat. Keep away from sources of ignition. Empty containers pose a fire risk, evaporate the residue under a fume hood. Ground all equipment containing material. Do not ingest. Do not breathe gas/fumes/ vapour/

spray. Wear suitable protective clothing In case of insufficient ventilation, wear suitable respiratory equipment If ingested, seek medical advice immediately and show the container or the label. Avoid contact with skin and eyes

Storage:
Keep container dry. Keep in a cool place. Ground all equipment containing material. Carcinogenic, teratogenic or mutagenic materials should be stored in a separate locked safety storage cabinet or room.

Section 8: Exposure Controls/Personal Protection

Engineering Controls:
Provide exhaust ventilation or other engineering controls to keep the airborne concentrations of vapors below their respective threshold limit value. Ensure that eyewash stations and safety showers are proximal to the work-station location.

Personal Protection:
Splash goggles. Lab coat. Vapor respirator. Be sure to use an approved/certified respirator or equivalent. Gloves.

Personal Protection in Case of a Large Spill:
Splash goggles. Full suit. Vapor respirator. Boots. Gloves. A self contained breathing apparatus should be used to avoid inhalation of the product. Suggested protective clothing might not be sufficient; consult a specialist BEFORE handling this product.

Exposure Limits:
TWA: 50 STEL: 200 (ppm) from ACGIH (TLV) TWA: 269 STEL: 1070 (mg/m3) from ACGIH Consult local authorities for acceptable exposure limits.

Section 9: Physical and Chemical Properties

Physical state and appearance: Liquid.

Odor: Not available.

Taste: Not available.

Molecular Weight: 131.39 g/mole

Color: Clear Colorless.

pH (1% soln/water): Not available.

Boiling Point: 86.7°C (188.1°F)

Melting Point: -87.1°C (-124.8°F)

Critical Temperature: Not available.

Specific Gravity: 1.4649 (Water = 1)

Vapor Pressure: 58 mm of Hg (@ 20°C)

Vapor Density: 4.53 (Air = 1)

Volatility: Not available.

Odor Threshold: 20 ppm

Water/Oil Dist. Coeff.: The product is equally soluble in oil and water; log(oil/water) = 0

Ionicity (in Water): Not available.

Dispersion Properties: See solubility in water, methanol, diethyl ether, acetone.

Solubility:
Easily soluble in methanol, diethyl ether, acetone. Very slightly soluble in cold water.

Section 10: Stability and Reactivity Data

Stability: The product is stable.

Instability Temperature: Not available.

Conditions of Instability: Not available.

Incompatibility with various substances: Not available.

Corrosivity:
Extremely corrosive in presence of aluminum. Non-corrosive in presence of glass.

Special Remarks on Reactivity: Not available.

Special Remarks on Corrosivity: Not available.

Polymerization: No.

Section 11: Toxicological Information

Routes of Entry: Dermal contact. Eye contact. Inhalation. Ingestion.

Toxicity to Animals:
Acute oral toxicity (LD50): 2402 mg/kg [Mouse]. Acute dermal toxicity (LD50): 20001 mg/kg [Rabbit].

Chronic Effects on Humans:
CARCINOGENIC EFFECTS: Classified + (PROVEN) by OSHA. Classified A5 (Not suspected for human.) by ACGIH. The substance is toxic to kidneys, the nervous system, liver, heart, upper respiratory tract.

Other Toxic Effects on Humans: Hazardous in case of skin contact (irritant, permeator), of ingestion, of inhalation.

Special Remarks on Toxicity to Animals: Not available.

Special Remarks on Chronic Effects on Humans: Passes through the placental barrier in human. Detected in maternal milk in human.

Special Remarks on other Toxic Effects on Humans: Not available.

Section 12: Ecological Information

Ecotoxicity: Not available.

BOD5 and COD: Not available.

Products of Biodegradation:
Possibly hazardous short term degradation products are not likely. However, long term degradation products may arise.

Toxicity of the Products of Biodegradation: The products of degradation are more toxic.

Special Remarks on the Products of Biodegradation: Not available.

Section 13: Disposal Considerations

Waste Disposal:

Section 14: Transport Information

DOT Classification: CLASS 6.1: Poisonous material.

Identification: : Trichloroethylene : UN1710 PG: III

Special Provisions for Transport: Not available.

Section 15: Other Regulatory Information

Federal and State Regulations:
California prop. 65: This product contains the following ingredients for which the State of California has found to cause cancer, birth defects or other reproductive harm, which would require a warning under the statute: Trichloroethylene California prop. 65: This product contains the following ingredients for which the State of California has found to cause cancer which would require a warning under the statute: Trichloroethylene Pennsylvania RTK: Trichloroethylene Florida: Trichloroethylene Minnesota: Trichloroethylene Massachusetts RTK: Trichloroethylene New Jersey: Trichloroethylene TSCA 8(b) inventory: Trichloroethylene CERCLA: Hazardous substances.: Trichloroethylene

Other Regulations: OSHA: Hazardous by definition of Hazard Communication Standard (29 CFR 1910.1200).

Other Classifications:

WHMIS (Canada):
CLASS D-1B: Material causing immediate and serious toxic effects (TOXIC). CLASS D-2B: Material causing other toxic effects (TOXIC).

DSCL (EEC):
R36/38- Irritating to eyes and skin. R45- May cause cancer.

HMIS (U.S.A.):

Health Hazard: 2

Fire Hazard: 1

Reactivity: 0

Personal Protection: h

National Fire Protection Association (U.S.A.):

Health: 2

Flammability: 1

Reactivity: 0

Specific hazard:

Protective Equipment:
Gloves. Lab coat. Vapor respirator. Be sure to use an approved/certified respirator or equivalent. Wear appropriate respirator when ventilation is inadequate. Splash goggles.

Section 16: Other Information

References: Not available.

Other Special Considerations: Not available.

Created: 10/10/2005 08:54 PM

Last Updated: 11/01/2010 12:00 PM

The information above is believed to be accurate and represents the best information currently available to us. However, we make no warranty of merchantability or any other warranty, express or implied, with respect to such information, and we assume no liability resulting from its use. Users should make their own investigations to determine the suitability of the information for their particular purposes. In no event shall ScienceLab.com be liable for any claims, losses, or damages of any third party or for lost profits or any special, indirect, incidental, consequential or exemplary damages, howsoever arising, even if ScienceLab.com has been advised of the possibility of such damages.

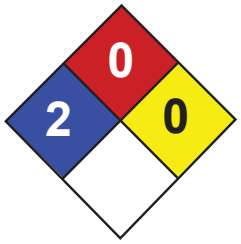

Health	2
Fire	0
Reactivity	0
Personal Protection	G

Material Safety Data Sheet
Tetrachloroethylene MSDS

Section 1: Chemical Product and Company Identification

Product Name: Tetrachloroethylene

Catalog Codes: SLT3220

CAS#: 127-18-4

RTECS: KX3850000

TSCA: TSCA 8(b) inventory: Tetrachloroethylene

CI#: Not available.

Synonym: Perchloroethylene; 1,1,2,2-Tetrachloroethylene; Carbon bichloride; Carbon dichloride; Ankilostin; Didakene; Dilatin PT; Ethene, tetrachloro-; Ethylene tetrachloride; Perawin; Perchlor; Perclene; Perclene D; Percosolvel; Tetrachloroethene; Tetraleno; Tetralex; Tetravec; Tetroguer; Tetropil

Chemical Name: Ethylene, tetrachloro-

Chemical Formula: C2-Cl4

Contact Information:

Sciencelab.com, Inc.
14025 Smith Rd.
Houston, Texas 77396

US Sales: **1-800-901-7247**
International Sales: **1-281-441-4400**

Order Online: ScienceLab.com

CHEMTREC (24HR Emergency Telephone), call: 1-800-424-9300

International CHEMTREC, call: 1-703-527-3887

For non-emergency assistance, call: 1-281-441-4400

Section 2: Composition and Information on Ingredients

Composition:

Name	CAS #	% by Weight
Tetrachloroethylene	127-18-4	100

Toxicological Data on Ingredients: Tetrachloroethylene: ORAL (LD50): Acute: 2629 mg/kg [Rat]. DERMAL (LD): Acute: >3228 mg/kg [Rabbit]. MIST(LC50): Acute: 34200 mg/m 8 hours [Rat]. VAPOR (LC50): Acute: 5200 ppm 4 hours [Mouse].

Section 3: Hazards Identification

Potential Acute Health Effects:
Hazardous in case of skin contact (irritant), of inhalation. Slightly hazardous in case of skin contact (permeator), of eye contact (irritant), of ingestion.

Potential Chronic Health Effects:
CARCINOGENIC EFFECTS: Classified A3 (Proven for animal.) by ACGIH. Classified 2A (Probable for human.) by IARC, 2 (anticipated carcinogen) by NTP. MUTAGENIC EFFECTS: Mutagenic for bacteria and/or yeast. TERATOGENIC EFFECTS: Not available. DEVELOPMENTAL TOXICITY: Not available. The substance may be toxic to kidneys, liver, peripheral nervous system, respiratory tract, skin, central nervous system (CNS). Repeated or prolonged exposure to the substance can produce target organs damage.

Section 4: First Aid Measures

Eye Contact:
Check for and remove any contact lenses. In case of contact, immediately flush eyes with plenty of water for at least 15 minutes. Get medical attention if irritation occurs.

Skin Contact:
In case of contact, immediately flush skin with plenty of water. Cover the irritated skin with an emollient. Remove contaminated clothing and shoes. Wash clothing before reuse. Thoroughly clean shoes before reuse. Get medical attention.

Serious Skin Contact:
Wash with a disinfectant soap and cover the contaminated skin with an anti-bacterial cream. Seek medical attention.

Inhalation:
If inhaled, remove to fresh air. If not breathing, give artificial respiration. If breathing is difficult, give oxygen. Get medical attention if symptoms appear.

Serious Inhalation:
Evacuate the victim to a safe area as soon as possible. Loosen tight clothing such as a collar, tie, belt or waistband. If breathing is difficult, administer oxygen. If the victim is not breathing, perform mouth-to-mouth resuscitation. Seek medical attention.

Ingestion:
Do NOT induce vomiting unless directed to do so by medical personnel. Never give anything by mouth to an unconscious person. Loosen tight clothing such as a collar, tie, belt or waistband. Get medical attention if symptoms appear.

Serious Ingestion: Not available.

Section 5: Fire and Explosion Data

Flammability of the Product: Non-flammable.

Auto-Ignition Temperature: Not applicable.

Flash Points: Not applicable.

Flammable Limits: Not applicable.

Products of Combustion: Not available.

Fire Hazards in Presence of Various Substances: Not applicable.

Explosion Hazards in Presence of Various Substances:
Risks of explosion of the product in presence of mechanical impact: Not available. Risks of explosion of the product in presence of static discharge: Not available.

Fire Fighting Media and Instructions: Not applicable.

Special Remarks on Fire Hazards: Not available.

Special Remarks on Explosion Hazards: Not available.

Section 6: Accidental Release Measures

Small Spill: Absorb with an inert material and put the spilled material in an appropriate waste disposal.

Large Spill:
Absorb with an inert material and put the spilled material in an appropriate waste disposal. Be careful that the product is not present at a concentration level above TLV. Check TLV on the MSDS and with local authorities.

Section 7: Handling and Storage

Precautions:
Do not ingest. Do not breathe gas/fumes/ vapor/spray. Avoid contact with skin. Wear suitable protective clothing. In case of insufficient ventilation, wear suitable respiratory equipment. If ingested, seek medical advice immediately and show the container or the label. Keep away from incompatibles such as oxidizing agents, metals, acids, alkalis.

Storage: Keep container tightly closed. Keep container in a cool, well-ventilated area.

Section 8: Exposure Controls/Personal Protection

Engineering Controls:
Provide exhaust ventilation or other engineering controls to keep the airborne concentrations of vapors below their respective threshold limit value.

Personal Protection:
Safety glasses. Lab coat. Vapor respirator. Be sure to use an approved/certified respirator or equivalent. Gloves.

Personal Protection in Case of a Large Spill:
Splash goggles. Full suit. Vapor respirator. Boots. Gloves. A self contained breathing apparatus should be used to avoid inhalation of the product. Suggested protective clothing might not be sufficient; consult a specialist BEFORE handling this product.

Exposure Limits:
TWA: 25 (ppm) from OSHA (PEL) [United States] TWA: 25 STEL: 100 (ppm) from ACGIH (TLV) [United States] TWA: 170 (mg/m3) from OSHA (PEL) [United States] Consult local authorities for acceptable exposure limits.

Section 9: Physical and Chemical Properties

Physical state and appearance: Liquid.

Odor: Ethereal.

Taste: Not available.

Molecular Weight: 165.83 g/mole

Color: Clear Colorless.

pH (1% soln/water): Not available.

Boiling Point: 121.3°C (250.3°F)

Melting Point: -22.3°C (-8.1°F)

Critical Temperature: 347.1°C (656.8°F)

Specific Gravity: 1.6227 (Water = 1)

Vapor Pressure: 1.7 kPa (@ 20°C)

Vapor Density: 5.7 (Air = 1)

Volatility: Not available.

Odor Threshold: 5 - 50 ppm

Water/Oil Dist. Coeff.: The product is more soluble in oil; log(oil/water) = 3.4

Ionicity (in Water): Not available.

Dispersion Properties: Not available.

Solubility:
Miscible with alcohol, ether, chloroform, benzene, hexane. It dissolves in most of the fixed and volatile oils. Solubility in water: 0.015 g/100 ml @ 25 deg. C It slowly decomposes in water to yield Trichloroacetic and Hydrochloric acids.

Section 10: Stability and Reactivity Data

Stability: The product is stable.

Instability Temperature: Not available.

Conditions of Instability: Incompatible materials

Incompatibility with various substances: Reactive with oxidizing agents, metals, acids, alkalis.

Corrosivity: Non-corrosive in presence of glass.

Special Remarks on Reactivity:
Oxidized by strong oxidizing agents. Incompatible with sodium hydroxide, finely divided or powdered metals such as zinc, aluminum, magnesium, potassium, chemically active metals such as lithium, beryllium , barium. Protect from light.

Special Remarks on Corrosivity: Slowly corrodes aluminum, iron, and zinc.

Polymerization: Will not occur.

Section 11: Toxicological Information

Routes of Entry: Absorbed through skin. Eye contact. Inhalation. Ingestion.

Toxicity to Animals:
WARNING: THE LC50 VALUES HEREUNDER ARE ESTIMATED ON THE BASIS OF A 4-HOUR EXPOSURE. Acute oral toxicity (LD50): 2629 mg/kg [Rat]. Acute dermal toxicity (LD50): >3228 mg/kg [Rabbit]. Acute toxicity of the vapor (LC50): 5200 4 hours [Mouse].

Chronic Effects on Humans:
CARCINOGENIC EFFECTS: Classified A3 (Proven for animal.) by ACGIH. Classified 2A (Probable for human.) by IARC, 2 (Some evidence.) by NTP. MUTAGENIC EFFECTS: Mutagenic for bacteria and/or yeast. May cause damage to the following organs: kidneys, liver, peripheral nervous system, upper respiratory tract, skin, central nervous system (CNS).

Other Toxic Effects on Humans:
Hazardous in case of skin contact (irritant), of inhalation. Slightly hazardous in case of skin contact (permeator), of ingestion.

Special Remarks on Toxicity to Animals:
Lowest Publishe Lethal Dose/Conc: LDL [Rabbit] - Route: Oral; Dose: 5000 mg/kg LDL [Dog] - Route: Oral; Dose: 4000 mg/kg LDL [Cat] - Route: Oral; Dose: 4000 mg/kg

Special Remarks on Chronic Effects on Humans:
May cause adverse reproductive effects and birth defects(teratogenic). May affect genetic material (mutagenic). May cause cancer.

Special Remarks on other Toxic Effects on Humans:
Acute Potential Health Effects: Skin: Causes skin irritation with possible dermal blistering or burns. Symtoms may include redness, itching, pain, and possible dermal blistering or burns. It may be absorbed through the skin with possible systemic effects. A single prolonged skin exposure is not likely to result in the material being absorbed in harmful amounts. Eyes: Contact causes transient eye irritation, lacrimation. Vapors cause eye/conjunctival irritation. Symptoms may include redness and pain. Inhalation: The main route to occupational exposure is by inhalation since it is readily absorbed through the lungs. It causes respiratory tract irritation, . It can affect behavior/central nervous system (CNS depressant and anesthesia ranging from slight inebriation to death, vertigo, somnolence, anxiety, headache, excitement, hallucinations, muscle incoordination, dizziness, lightheadness, disorentiation, seizures, enotional instability, stupor, coma). It may cause pulmonary edema Ingestion: It can cause nausea, vomiting, anorexia, diarrhea, bloody stool. It may affect the liver, urinary system (proteinuria, hematuria, renal failure, renal tubular disorder), heart (arrhythmias). It may affect behavior/central nervous system with symptoms similar to that of inhalation. Chronic Potential Health Effects: Skin: Prolonged or repeated skin contact may result in excessive drying of the skin, and irritation. Ingestion/Inhalation: Chronic exposure can affect the liver(hepatitis,fatty liver degeneration), kidneys, spleen, and heart (irregular heartbeat/arrhythmias, cardiomyopathy, abnormal EEG), brain, behavior/central nervous system/peripheral nervous system (impaired memory, numbness of extremeties, peripheral neuropathy and other

Section 12: Ecological Information

Ecotoxicity:
Ecotoxicity in water (LC50): 18.4 mg/l 96 hours [Fish (Fatthead Minnow)]. 18 mg/l 48 hours [Daphnia (daphnia)]. 5 mg/l 96 hours [Fish (Rainbow Trout)]. 13 mg/l 96 hours [Fish (Bluegill sunfish)].

BOD5 and COD: Not available.

Products of Biodegradation:
Possibly hazardous short term degradation products are not likely. However, long term degradation products may arise.

Toxicity of the Products of Biodegradation: The product itself and its products of degradation are not toxic.

Special Remarks on the Products of Biodegradation: Not available.

Section 13: Disposal Considerations

Waste Disposal:
Waste must be disposed of in accordance with federal, state and local environmental control regulations.

Section 14: Transport Information

DOT Classification: CLASS 6.1: Poisonous material.

Identification: : Tetrachloroethylene UNNA: 1897 PG: III

Special Provisions for Transport: Marine Pollutant

Section 15: Other Regulatory Information

Federal and State Regulations:
California prop. 65: This product contains the following ingredients for which the State of California has found to cause cancer, birth defects or other reproductive harm, which would require a warning under the statute: Tetrachloroethylene California prop. 65: This product contains the following ingredients for which the State of California has found to cause cancer which would require a warning under the statute: Tetrachloroethylene Connecticut hazardous material survey.: Tetrachloroethylene Illinois toxic substances disclosure to employee act: Tetrachloroethylene Illinois chemical safety act: Tetrachloroethylene New York release reporting list: Tetrachloroethylene Rhode Island RTK hazardous substances: Tetrachloroethylene Pennsylvania RTK: Tetrachloroethylene Minnesota: Tetrachloroethylene Michigan critical material: Tetrachloroethylene Massachusetts RTK: Tetrachloroethylene Massachusetts spill list: Tetrachloroethylene New Jersey: Tetrachloroethylene New Jersey spill list: Tetrachloroethylene Louisiana spill reporting: Tetrachloroethylene California Director's List of Hazardous Substances: Tetrachloroethylene TSCA 8(b) inventory: Tetrachloroethylene TSCA 8(d) H and S data reporting: Tetrachloroethylene: Effective date: 6/1/87; Sunset date: 6/1/97 SARA 313 toxic chemical notification and release reporting: Tetrachloroethylene CERCLA: Hazardous substances.: Tetrachloroethylene: 100 lbs. (45.36 kg)

Other Regulations:
OSHA: Hazardous by definition of Hazard Communication Standard (29 CFR 1910.1200). EINECS: This product is on the European Inventory of Existing Commercial Chemical Substances.

Other Classifications:

WHMIS (Canada):
CLASS D-1B: Material causing immediate and serious toxic effects (TOXIC). CLASS D-2A: Material causing other toxic effects (VERY TOXIC).

DSCL (EEC):
R40- Possible risks of irreversible effects. R51/53- Toxic to aquatic organisms, may cause long-term adverse effects in the aquatic environment. S23- Do not breathe gas/fumes/vapour/spray S26- In case of contact with eyes, rinse immediately with plenty of water and seek medical advice. S37- Wear suitable gloves. S61- Avoid release to the environment. Refer to special instructions/Safety data sheets.

HMIS (U.S.A.):

Health Hazard: 2

Fire Hazard: 0

Reactivity: 0

Personal Protection: g

National Fire Protection Association (U.S.A.):

Health: 2

Flammability: 0

Reactivity: 0

Specific hazard:

Protective Equipment:
Gloves. Lab coat. Vapor respirator. Be sure to use an approved/certified respirator or equivalent. Wear appropriate respirator when ventilation is inadequate. Safety glasses.

Section 16: Other Information

References: Not available.

Other Special Considerations: Not available.

Created: 10/10/2005 08:29 PM

Last Updated: 11/01/2010 12:00 PM

The information above is believed to be accurate and represents the best information currently available to us. However, we make no warranty of merchantability or any other warranty, express or implied, with respect to such information, and we assume no liability resulting from its use. Users should make their own investigations to determine the suitability of the information for their particular purposes. In no event shall ScienceLab.com be liable for any claims, losses, or damages of any third party or for lost profits or any special, indirect, incidental, consequential or exemplary damages, howsoever arising, even if ScienceLab.com has been advised of the possibility of such damages.

Health	2
Fire	3
Reactivity	0
Personal Protection	H

Material Safety Data Sheet
p-Xylene MSDS

Section 1: Chemical Product and Company Identification

Product Name: p-Xylene

Catalog Codes: SLX1120

CAS#: 106-42-3

RTECS: ZE2625000

TSCA: TSCA 8(b) inventory: p-Xylene

CI#: Not applicable.

Synonym: p-Methyltoluene

Chemical Name: 1,4-Dimethylbenzene

Chemical Formula: C6H4(CH3)2

Contact Information:

Sciencelab.com, Inc.
14025 Smith Rd.
Houston, Texas 77396

US Sales: **1-800-901-7247**
International Sales: **1-281-441-4400**

Order Online: ScienceLab.com

CHEMTREC (24HR Emergency Telephone), call: 1-800-424-9300

International CHEMTREC, call: 1-703-527-3887

For non-emergency assistance, call: 1-281-441-4400

Section 2: Composition and Information on Ingredients

Composition:

Name	CAS #	% by Weight
{p-}Xylene	106-42-3	100

Toxicological Data on Ingredients: p-Xylene: ORAL (LD50): Acute: 5000 mg/kg [Rat.]. DERMAL (LD50): Acute: 12400 mg/kg [Rabbit.]. VAPOR (LC50): Acute: 4550 ppm 4 hour(s) [Rat].

Section 3: Hazards Identification

Potential Acute Health Effects:
Very hazardous in case of skin contact (irritant), of eye contact (irritant). Slightly hazardous in case of skin contact (permeator), of ingestion, of inhalation. Inflammation of the eye is characterized by redness, watering, and itching. Skin inflammation is characterized by itching, scaling, reddening, or, occasionally, blistering.

Potential Chronic Health Effects:
Hazardous in case of skin contact (irritant), of eye contact (irritant).
Slightly hazardous in case of skin contact (permeator), of ingestion, of inhalation.
CARCINOGENIC EFFECTS: Not available.
MUTAGENIC EFFECTS: Not available.
TERATOGENIC EFFECTS: Not available.
DEVELOPMENTAL TOXICITY: Not available.
The substance is toxic to blood, kidneys, the nervous system, liver.
Repeated or prolonged exposure to the substance can produce target organs damage.

Section 4: First Aid Measures

Eye Contact: Check for and remove any contact lenses. Do not use an eye ointment. Seek medical attention.

Skin Contact:
After contact with skin, wash immediately with plenty of water. Gently and thoroughly wash the contaminated skin with running water and non-abrasive soap. Be particularly careful to clean folds, crevices, creases and groin. Cover the irritated skin with an emollient. If irritation persists, seek medical attention. Wash contaminated clothing before reusing.

Serious Skin Contact:
Wash with a disinfectant soap and cover the contaminated skin with an anti-bacterial cream. Seek immediate medical attention.

Inhalation: Allow the victim to rest in a well ventilated area. Seek immediate medical attention.

Serious Inhalation: Not available.

Ingestion:
Do not induce vomiting. Examine the lips and mouth to ascertain whether the tissues are damaged, a possible indication that the toxic material was ingested; the absence of such signs, however, is not conclusive. Loosen tight clothing such as a collar, tie, belt or waistband. If the victim is not breathing, perform mouth-to-mouth resuscitation. Seek immediate medical attention.

Serious Ingestion: Not available.

Section 5: Fire and Explosion Data

Flammability of the Product: Flammable.

Auto-Ignition Temperature: 527°C (980.6°F)

Flash Points: CLOSED CUP: 25°C (77°F). OPEN CUP: 28.9°C (84°F) (Cleveland).

Flammable Limits: LOWER: 1.1% UPPER: 7%

Products of Combustion: These products are carbon oxides (CO, CO2).

Fire Hazards in Presence of Various Substances: Highly flammable in presence of open flames and sparks, of heat.

Explosion Hazards in Presence of Various Substances:
Risks of explosion of the product in presence of mechanical impact: Not available.
Risks of explosion of the product in presence of static discharge: Not available.

Fire Fighting Media and Instructions:
Flammable liquid, insoluble in water.
SMALL FIRE: Use DRY chemical powder.
LARGE FIRE: Use water spray or fog. Cool containing vessels with water jet in order to prevent pressure build-up, autoignition or explosion.

Special Remarks on Fire Hazards:
Explosive in the form of vapor when exposed to heat or flame. Vapor may travel considerable distance to source of ignition and flash back. When heated to decomposition it emits acrid smoke and irritating fumes.

Special Remarks on Explosion Hazards: Not available.

Section 6: Accidental Release Measures

Small Spill: Absorb with an inert material and put the spilled material in an appropriate waste disposal.

Large Spill:
Toxic flammable liquid, insoluble or very slightly soluble in water.
Keep away from heat. Keep away from sources of ignition. Stop leak if without risk. Absorb with DRY earth, sand or other non-combustible material. Do not get water inside container. Do not touch spilled material. Prevent entry into sewers, basements or confined areas; dike if needed. Eliminate all ignition sources. Call for assistance on disposal. Be careful that the product is not present at a concentration level above TLV. Check TLV on the MSDS and with local authorities.

Section 7: Handling and Storage

Precautions:
Keep away from heat. Keep away from sources of ignition. Ground all equipment containing material. Do not ingest. Do not breathe gas/fumes/ vapour/spray. If ingested, seek medical advice immediately and show the container or the label. Avoid contact with skin and eyes Keep away from incompatibles such as oxidizing agents.

Storage:
Flammable materials should be stored in a separate safety storage cabinet or room. Keep away from heat. Keep away from sources of ignition. Keep container tightly closed. Keep in a cool, well-ventilated place. Ground all equipment containing material. A refrigerated room would be preferable for materials with a flash point lower than 37.8°C (100°F).

Section 8: Exposure Controls/Personal Protection

Engineering Controls:
Provide exhaust ventilation or other engineering controls to keep the airborne concentrations of vapors below their respective threshold limit value. Ensure that eyewash stations and safety showers are proximal to the work-station location.

Personal Protection:
Splash goggles. Lab coat. Vapor respirator. Be sure to use an approved/certified respirator or equivalent. Gloves.

Personal Protection in Case of a Large Spill:
Splash goggles. Full suit. Vapor respirator. Boots. Gloves. A self contained breathing apparatus should be used to avoid inhalation of the product. Suggested protective clothing might not be sufficient; consult a specialist BEFORE handling this product.

Exposure Limits:
TWA: 100 STEL: 150 (ppm) from ACGIH (TLV)
TWA: 434 STEL: 651 (mg/m3) from ACGIHConsult local authorities for acceptable exposure limits.

Section 9: Physical and Chemical Properties

Physical state and appearance: Liquid. (Liquid.)

Odor: Not available.

Taste: Not available.

Molecular Weight: 106.17 g/mole

Color: Colorless.

pH (1% soln/water): Not applicable.

Boiling Point: 138°C (280.4°F)

Melting Point: 12°C (53.6°F)

Critical Temperature: Not available.

Specific Gravity: 0.86 (Water = 1)

Vapor Pressure: 9 mm of Hg (@ 20°C)

Vapor Density: 3.7 (Air = 1)

Volatility: Not available.

Odor Threshold: 0.62 ppm

Water/Oil Dist. Coeff.: Not available.

Ionicity (in Water): Not available.

Dispersion Properties: See solubility in water, methanol, diethyl ether.

Solubility:
Easily soluble in methanol, diethyl ether.
Insoluble in cold water, hot water.

Section 10: Stability and Reactivity Data

Stability: The product is stable.

Instability Temperature: Not available.

Conditions of Instability: Not available.

Incompatibility with various substances: Reactive with oxidizing agents.

Corrosivity: Non-corrosive in presence of glass.

Special Remarks on Reactivity: Not available.

Special Remarks on Corrosivity: Not available.

Polymerization: No.

Section 11: Toxicological Information

Routes of Entry: Eye contact.

Toxicity to Animals:
WARNING: THE LC50 VALUES HEREUNDER ARE ESTIMATED ON THE BASIS OF A 4-HOUR EXPOSURE.
Acute oral toxicity (LD50): 5000 mg/kg [Rat.].
Acute dermal toxicity (LD50): 12400 mg/kg [Rabbit.].
Acute toxicity of the vapor (LC50): 4550 ppm 4 hour(s) [Rat].

Chronic Effects on Humans: The substance is toxic to blood, kidneys, the nervous system, liver.

Other Toxic Effects on Humans:
Very hazardous in case of skin contact (irritant).
Slightly hazardous in case of skin contact (permeator), of ingestion, of inhalation.

Special Remarks on Toxicity to Animals: Not available.

Special Remarks on Chronic Effects on Humans:

0347 Animal: embryotoxic, foetotoxic, passes through the placental barrier.
0900 Detected in maternal milk in human.
Narcotic effect; may cause nervous system disturbances.

Special Remarks on other Toxic Effects on Humans: Material is irritating to mucous membranes and upper respiratory tract.

Section 12: Ecological Information

Ecotoxicity: Not available.

BOD5 and COD: Not available.

Products of Biodegradation:
Possibly hazardous short term degradation products are not likely. However, long term degradation products may arise.

Toxicity of the Products of Biodegradation: The products of degradation are more toxic.

Special Remarks on the Products of Biodegradation: Not available.

Section 13: Disposal Considerations

Waste Disposal:

Section 14: Transport Information

DOT Classification: Class 3: Flammable liquid.

Identification: : Xylene : UN1307 PG: III

Special Provisions for Transport: Not available.

Section 15: Other Regulatory Information

Federal and State Regulations:
Pennsylvania RTK: p-Xylene
Florida: p-Xylene
Massachusetts RTK: p-Xylene
New Jersey: p-Xylene
TSCA 8(b) inventory: p-Xylene
SARA 313 toxic chemical notification and release reporting: p-Xylene
CERCLA: Hazardous substances.: p-Xylene

Other Regulations: OSHA: Hazardous by definition of Hazard Communication Standard (29 CFR 1910.1200).

Other Classifications:

WHMIS (Canada):
CLASS B-2: Flammable liquid with a flash point lower than 37.8°C (100°F).
CLASS D-2B: Material causing other toxic effects (TOXIC).

DSCL (EEC):
R10- Flammable.
R38- Irritating to skin.
R41- Risk of serious damage to eyes.
R48/20- Harmful: danger of serious

damage to health by prolonged exposure through inhalation.

HMIS (U.S.A.):

Health Hazard: 2

Fire Hazard: 3

Reactivity: 0

Personal Protection: h

National Fire Protection Association (U.S.A.):

Health: 2

Flammability: 3

Reactivity: 0

Specific hazard:

Protective Equipment:
Gloves.
Lab coat.
Vapor respirator. Be sure to use an approved/certified respirator or equivalent. Wear appropriate respirator when ventilation is inadequate.
Splash goggles.

Section 16: Other Information

References:
-Hawley, G.G.. The Condensed Chemical Dictionary, 11e ed., New York N.Y., Van Nostrand Reinold, 1987.
-Material safety data sheet emitted by: la Commission de la SantÃ© et de la SÃ©curitÃ© du Travail du QuÃ©bec.
-SAX, N.I. Dangerous Properties of Indutrial Materials. Toronto, Van Nostrand Reinold, 6e ed. 1984.
-The Sigma-Aldrich Library of Chemical Safety Data, Edition II.
-Guide de la loi et du rÃ¨glement sur le transport des marchandises dangeureuses au canada. Centre de conformitÃ© internatinal LtÃ©e. 1986.

Other Special Considerations: Not available.

Created: 10/10/2005 08:33 PM

Last Updated: 10/10/2005 08:33 PM

The information above is believed to be accurate and represents the best information currently available to us. However, we make no warranty of merchantability or any other warranty, express or implied, with respect to such information, and we assume no liability resulting from its use. Users should make their own investigations to determine the suitability of the information for their particular purposes. In no event shall ScienceLab.com be liable for any claims, losses, or damages of any third party or for lost profits or any special, indirect, incidental, consequential or exemplary damages, howsoever arising, even if ScienceLab.com has been advised of the possibility of such damages.

Health	2
Fire	3
Reactivity	0
Personal Protection	J

Material Safety Data Sheet
m-Xylene MSDS

Section 1: Chemical Product and Company Identification

Product Name: m-Xylene

Catalog Codes: SLX1066

CAS#: 108-38-3

RTECS: ZE2275000

TSCA: TSCA 8(b) inventory: m-Xylene

CI#: Not applicable.

Synonym: m-Methyltoluene

Chemical Name: 1,3-Dimethylbenzene

Chemical Formula: C6H4(CH3)2

Contact Information:

Sciencelab.com, Inc.
14025 Smith Rd.
Houston, Texas 77396

US Sales: **1-800-901-7247**
International Sales: **1-281-441-4400**

Order Online: ScienceLab.com

CHEMTREC (24HR Emergency Telephone), call: 1-800-424-9300

International CHEMTREC, call: 1-703-527-3887

For non-emergency assistance, call: 1-281-441-4400

Section 2: Composition and Information on Ingredients

Composition:

Name	CAS #	% by Weight
{m-}Xylene	108-38-3	100

Toxicological Data on Ingredients: m-Xylene: ORAL (LD50): Acute: 5000 mg/kg [Rat.]. DERMAL (LD50): Acute: 14100 mg/kg [Rabbit.].

Section 3: Hazards Identification

Potential Acute Health Effects:
Very hazardous in case of skin contact (irritant), of eye contact (irritant). Slightly hazardous in case of skin contact (permeator), of ingestion, of inhalation. Inflammation of the eye is characterized by redness, watering, and itching. Skin inflammation is characterized by itching, scaling, reddening, or, occasionally, blistering.

Potential Chronic Health Effects:
Hazardous in case of skin contact (irritant), of eye contact (irritant).
Slightly hazardous in case of skin contact (permeator), of ingestion, of inhalation.
CARCINOGENIC EFFECTS: Not available.
MUTAGENIC EFFECTS: Not available.
TERATOGENIC EFFECTS: Not available.
DEVELOPMENTAL TOXICITY: Not available.
The substance is toxic to blood, kidneys, the nervous system, liver.
Repeated or prolonged exposure to the substance can produce target organs damage.

Section 4: First Aid Measures

Eye Contact: Check for and remove any contact lenses. Do not use an eye ointment. Seek medical attention.

Skin Contact:
After contact with skin, wash immediately with plenty of water. Gently and thoroughly wash the contaminated skin with running water and non-abrasive soap. Be particularly careful to clean folds, crevices, creases and groin. Cover the irritated skin with an emollient. If irritation persists, seek medical attention. Wash contaminated clothing before reusing.

Serious Skin Contact:
Wash with a disinfectant soap and cover the contaminated skin with an anti-bacterial cream. Seek medical attention.

Inhalation: Allow the victim to rest in a well ventilated area. Seek immediate medical attention.

Serious Inhalation: Not available.

Ingestion:
Do not induce vomiting. Loosen tight clothing such as a collar, tie, belt or waistband. If the victim is not breathing, perform mouth-to-mouth resuscitation. Seek immediate medical attention.

Serious Ingestion: Not available.

Section 5: Fire and Explosion Data

Flammability of the Product: Flammable.

Auto-Ignition Temperature: 527°C (980.6°F)

Flash Points: CLOSED CUP: 25°C (77°F). OPEN CUP: 28.9°C (84°F) (Cleveland).

Flammable Limits: LOWER: 1.1% UPPER: 7%

Products of Combustion: These products are carbon oxides (CO, CO2).

Fire Hazards in Presence of Various Substances: Highly flammable in presence of open flames and sparks, of heat.

Explosion Hazards in Presence of Various Substances:
Risks of explosion of the product in presence of mechanical impact: Not available.
Risks of explosion of the product in presence of static discharge: Not available.

Fire Fighting Media and Instructions:
Flammable liquid, insoluble in water.
SMALL FIRE: Use DRY chemical powder.
LARGE FIRE: Use water spray or fog. Cool containing vessels with water jet in order to prevent pressure build-up, autoignition or explosion.

Special Remarks on Fire Hazards:
Explosive in the form of vapor when exposed to heat or flame. Vapor may travel considerable distance to source of ignition and flash back. When heated to decomposition it emits acrid smoke and irritating fumes.

Special Remarks on Explosion Hazards: Not available.

Section 6: Accidental Release Measures

Small Spill: Absorb with an inert material and put the spilled material in an appropriate waste disposal.

Large Spill:
Flammable liquid, insoluble in water.

Keep away from heat. Keep away from sources of ignition. Stop leak if without risk. Absorb with DRY earth, sand or other non-combustible material. Do not get water inside container. Do not touch spilled material. Prevent entry into sewers, basements or confined areas; dike if needed. Eliminate all ignition sources. Call for assistance on disposal. Be careful that the product is not present at a concentration level above TLV. Check TLV on the MSDS and with local authorities.

Section 7: Handling and Storage

Precautions:
Keep away from heat. Keep away from sources of ignition. Ground all equipment containing material. Do not ingest. Do not breathe gas/fumes/ vapour/spray. If ingested, seek medical advice immediately and show the container or the label. Avoid contact with skin and eyes Keep away from incompatibles such as oxidizing agents.

Storage:
Flammable materials should be stored in a separate safety storage cabinet or room. Keep away from heat. Keep away from sources of ignition. Keep container tightly closed. Keep in a cool, well-ventilated place. Ground all equipment containing material. A refrigerated room would be preferable for materials with a flash point lower than 37.8°C (100°F).

Section 8: Exposure Controls/Personal Protection

Engineering Controls:
Provide exhaust ventilation or other engineering controls to keep the airborne concentrations of vapors below their respective threshold limit value. Ensure that eyewash stations and safety showers are proximal to the work-station location.

Personal Protection: Splash goggles. Lab coat. Gloves.

Personal Protection in Case of a Large Spill:
Splash goggles. Full suit. Boots. Gloves. Suggested protective clothing might not be sufficient; consult a specialist BEFORE handling this product.

Exposure Limits:
TWA: 100 STEL: 150 (ppm) from ACGIH (TLV)
TWA: 434 STEL: 651 (mg/m3) from ACGIHConsult local authorities for acceptable exposure limits.

Section 9: Physical and Chemical Properties

Physical state and appearance: Liquid. (Liquid.)

Odor: Not available.

Taste: Not available.

Molecular Weight: 106.17 g/mole

Color: Colorless.

pH (1% soln/water): Not applicable.

Boiling Point: 139.3°C (282.7°F)

Melting Point: -47.87°C (-54.2°F)

Critical Temperature: Not available.

Specific Gravity: 0.86 (Water = 1)

Vapor Pressure: 6 mm of Hg (@ 20°C)

Vapor Density: 3.7 (Air = 1)

Volatility: Not available.

Odor Threshold: 0.62 ppm

Water/Oil Dist. Coeff.: Not available.

Ionicity (in Water): Not available.

Dispersion Properties: See solubility in water, methanol, diethyl ether.

Solubility:
Easily soluble in methanol, diethyl ether.
Insoluble in cold water, hot water.

Section 10: Stability and Reactivity Data

Stability: The product is stable.

Instability Temperature: Not available.

Conditions of Instability: Not available.

Incompatibility with various substances: Reactive with oxidizing agents.

Corrosivity: Non-corrosive in presence of glass.

Special Remarks on Reactivity: Not available.

Special Remarks on Corrosivity: Not available.

Polymerization: No.

Section 11: Toxicological Information

Routes of Entry: Eye contact.

Toxicity to Animals:
Acute oral toxicity (LD50): 5000 mg/kg [Rat.].
Acute dermal toxicity (LD50): 14100 mg/kg [Rabbit.].

Chronic Effects on Humans: The substance is toxic to blood, kidneys, the nervous system, liver.

Other Toxic Effects on Humans:
Very hazardous in case of skin contact (irritant).
Slightly hazardous in case of skin contact (permeator), of ingestion, of inhalation.

Special Remarks on Toxicity to Animals: Not available.

Special Remarks on Chronic Effects on Humans:
0347 Animal: embryotoxic, foetotoxic, passes through the placental barrier.
0900 Detected in maternal milk in human.
Narcotic effect; may cause nervous system disturbances.

Special Remarks on other Toxic Effects on Humans: Material is irritating to mucous membranes and upper respiratory tract.

Section 12: Ecological Information

Ecotoxicity: Not available.

BOD5 and COD: Not available.

Products of Biodegradation:
Possibly hazardous short term degradation products are not likely. However, long term degradation products may arise.

Toxicity of the Products of Biodegradation: The products of degradation are more toxic.

Special Remarks on the Products of Biodegradation: Not available.

Section 13: Disposal Considerations

Waste Disposal:

Section 14: Transport Information

DOT Classification: Class 3: Flammable liquid.

Identification: : Xylene : UN1307 PG: III

Special Provisions for Transport: Not available.

Section 15: Other Regulatory Information

Federal and State Regulations:
Pennsylvania RTK: m-Xylene
Massachusetts RTK: m-Xylene
TSCA 8(b) inventory: m-Xylene
SARA 313 toxic chemical notification and release reporting: m-Xylene
CERCLA: Hazardous substances.: m-Xylene

Other Regulations: OSHA: Hazardous by definition of Hazard Communication Standard (29 CFR 1910.1200).

Other Classifications:

WHMIS (Canada):
CLASS B-2: Flammable liquid with a flash point lower than 37.8°C (100°F).
CLASS D-2B: Material causing other toxic effects (TOXIC).

DSCL (EEC):
R10- Flammable.
R38- Irritating to skin.
R41- Risk of serious damage to eyes.

HMIS (U.S.A.):

Health Hazard: 2

Fire Hazard: 3

Reactivity: 0

Personal Protection: j

National Fire Protection Association (U.S.A.):

Health: 2

Flammability: 3

Reactivity: 0

Specific hazard:

Protective Equipment:
Gloves.
Lab coat.
Wear appropriate respirator when
ventilation is inadequate.
Splash goggles.

Section 16: Other Information

References:
-Hawley, G.G.. The Condensed Chemical Dictionary, 11e ed., New York N.Y., Van Nostrand Reinold, 1987.
-Material safety data sheet emitted by: la Commission de la SantÃ© et de la SÃ©curitÃ© du Travail du QuÃ©bec.
-SAX, N.I. Dangerous Properties of Indutrial Materials. Toronto, Van Nostrand Reinold, 6e ed. 1984.
-The Sigma-Aldrich Library of Chemical Safety Data, Edition II.
-Guide de la loi et du rÃ¨glement sur le transport des marchandises dangeureuses au canada. Centre de conformitÃ© internatinal LtÃ©e. 1986.

Other Special Considerations: Not available.

Created: 10/10/2005 08:33 PM

Last Updated: 10/10/2005 08:33 PM

The information above is believed to be accurate and represents the best information currently available to us. However, we make no warranty of merchantability or any other warranty, express or implied, with respect to such information, and we assume no liability resulting from its use. Users should make their own investigations to determine the suitability of the information for their particular purposes. In no event shall ScienceLab.com be liable for any claims, losses, or damages of any third party or for lost profits or any special, indirect, incidental, consequential or exemplary damages, howsoever arising, even if ScienceLab.com has been advised of the possibility of such damages.

Health	0
Fire	2
Reactivity	0
Personal Protection	H

Material Safety Data Sheet
Mesitylene MSDS

Section 1: Chemical Product and Company Identification

Product Name: Mesitylene

Catalog Codes: SLM2410

CAS#: 108-67-8

RTECS: OX6825000

TSCA: TSCA 8(b) inventory: Mesitylene

CI#: Not available.

Synonym: 1,3,5-Trimethylbenzene

Chemical Formula: C9H12

Contact Information:

Sciencelab.com, Inc.
14025 Smith Rd.
Houston, Texas 77396

US Sales: **1-800-901-7247**
International Sales: **1-281-441-4400**

Order Online: ScienceLab.com

CHEMTREC (24HR Emergency Telephone), call:
1-800-424-9300

International CHEMTREC, call: 1-703-527-3887

For non-emergency assistance, call: 1-281-441-4400

Section 2: Composition and Information on Ingredients

Composition:

Name	CAS #	% by Weight
Mesitylene	108-67-8	100

Toxicological Data on Ingredients: Mesitylene: VAPOR (LC50): Acute: 4881.9 ppm 4 hour(s) [Rat].

Section 3: Hazards Identification

Potential Acute Health Effects:
Hazardous in case of eye contact (irritant), of ingestion, of inhalation (lung irritant). Slightly hazardous in case of skin contact (irritant, permeator), .

Potential Chronic Health Effects:
CARCINOGENIC EFFECTS: Not available.
MUTAGENIC EFFECTS: Not available.
TERATOGENIC EFFECTS: Not available.
DEVELOPMENTAL TOXICITY: Not available.
Repeated or prolonged exposure is not known to aggravate medical condition.

Section 4: First Aid Measures

Eye Contact:
Check for and remove any contact lenses. Immediately flush eyes with running water for at least 15 minutes,

keeping eyelids open. Cold water may be used. Do not use an eye ointment. Seek medical attention.

Skin Contact:
After contact with skin, wash immediately with plenty of water. Gently and thoroughly wash the contaminated skin with running water and non-abrasive soap. Be particularly careful to clean folds, crevices, creases and groin. Cover the irritated skin with an emollient. If irritation persists, seek medical attention. Wash contaminated clothing before reusing.

Serious Skin Contact: Not available.

Inhalation: Allow the victim to rest in a well ventilated area. Seek immediate medical attention.

Serious Inhalation:
Evacuate the victim to a safe area as soon as possible. Loosen tight clothing such as a collar, tie, belt or waistband. If breathing is difficult, administer oxygen. If the victim is not breathing, perform mouth-to-mouth resuscitation. Seek medical attention.

Ingestion:
Do not induce vomiting. Loosen tight clothing such as a collar, tie, belt or waistband. If the victim is not breathing, perform mouth-to-mouth resuscitation. Seek immediate medical attention.

Serious Ingestion: Not available.

Section 5: Fire and Explosion Data

Flammability of the Product: Flammable.

Auto-Ignition Temperature: 559°C (1038.2°F)

Flash Points: CLOSED CUP: 43°C (109.4°F).

Flammable Limits: Not available.

Products of Combustion: These products are carbon oxides (CO, CO2).

Fire Hazards in Presence of Various Substances: Not available.

Explosion Hazards in Presence of Various Substances:
Risks of explosion of the product in presence of mechanical impact: Not available.
Risks of explosion of the product in presence of static discharge: Not available.

Fire Fighting Media and Instructions:
Flammable liquid, soluble or dispersed in water.
SMALL FIRE: Use DRY chemical powder.
LARGE FIRE: Use alcohol foam, water spray or fog. Cool containing vessels with water jet in order to prevent pressure build-up, autoignition or explosion.

Special Remarks on Fire Hazards: Not available.

Special Remarks on Explosion Hazards: Not available.

Section 6: Accidental Release Measures

Small Spill: Absorb with an inert material and put the spilled material in an appropriate waste disposal.

Large Spill:
Flammable liquid.
Keep away from heat. Keep away from sources of ignition. Stop leak if without risk. Absorb with DRY earth, sand or other non-combustible material. Do not touch spilled material. Prevent entry into sewers, basements or confined areas; dike if needed. Eliminate all ignition sources. Be careful that the product is not present at a

concentration level above TLV. Check TLV on the MSDS and with local authorities.

Section 7: Handling and Storage

Precautions:
Keep away from heat. Keep away from sources of ignition. Ground all equipment containing material. Do not ingest. Do not breathe gas/fumes/ vapour/spray. Avoid contact with eyes Wear suitable protective clothing If ingested, seek medical advice immediately and show the container or the label.

Storage:
Flammable materials should be stored in a separate safety storage cabinet or room. Keep away from heat. Keep away from sources of ignition. Keep container tightly closed. Keep in a cool, well-ventilated place. Ground all equipment containing material. Keep container dry. Keep in a cool place.

Section 8: Exposure Controls/Personal Protection

Engineering Controls:
Provide exhaust ventilation or other engineering controls to keep the airborne concentrations of vapors below their respective threshold limit value. Ensure that eyewash stations and safety showers are proximal to the work-station location.

Personal Protection:
Splash goggles. Lab coat. Vapor respirator. Be sure to use an approved/certified respirator or equivalent. Gloves.

Personal Protection in Case of a Large Spill:
Splash goggles. Full suit. Vapor respirator. Boots. Gloves. A self contained breathing apparatus should be used to avoid inhalation of the product. Suggested protective clothing might not be sufficient; consult a specialist BEFORE handling this product.

Exposure Limits:
TWA: 25 CEIL: 35 (ppm)
TWA: 125 CEIL: 170 (mg/m3)
Consult local authorities for acceptable exposure limits.

Section 9: Physical and Chemical Properties

Physical state and appearance: Liquid.

Odor: Aromatic.

Taste: Not available.

Molecular Weight: 120.2 g/mole

Color: Not available.

pH (1% soln/water): Not available.

Boiling Point: 164.7°C (328.5°F)

Melting Point: -44.8°C (-48.6°F)

Critical Temperature: Not available.

Specific Gravity: 0.8637 (Water = 1)

Vapor Pressure: 1.86 mm of Hg (@ 20°C)

Vapor Density: 4.14 (Air = 1)

Volatility: Not available.

Odor Threshold: 0.23 ppm

Water/Oil Dist. Coeff.: The product is equally soluble in oil and water; log(oil/water) = 0

Ionicity (in Water): Not available.

Dispersion Properties: Not available.

Solubility: Very slightly soluble in cold water.

Section 10: Stability and Reactivity Data

Stability: The product is stable.

Instability Temperature: Not available.

Conditions of Instability: Not available.

Incompatibility with various substances: Not available.

Corrosivity: Non-corrosive in presence of glass.

Special Remarks on Reactivity: Not available.

Special Remarks on Corrosivity: Not available.

Polymerization: No.

Section 11: Toxicological Information

Routes of Entry: Eye contact. Ingestion.

Toxicity to Animals:
WARNING: THE LC50 VALUES HEREUNDER ARE ESTIMATED ON THE BASIS OF A 4-HOUR EXPOSURE.
Acute toxicity of the vapor (LC50): 4881.9 ppm 4 hour(s) [Rat].

Chronic Effects on Humans: Not available.

Other Toxic Effects on Humans:
Hazardous in case of ingestion, of inhalation (lung irritant).
Slightly hazardous in case of skin contact (irritant, permeator), .

Special Remarks on Toxicity to Animals: Not available.

Special Remarks on Chronic Effects on Humans: Not available.

Special Remarks on other Toxic Effects on Humans: Not available.

Section 12: Ecological Information

Ecotoxicity: Not available.

BOD5 and COD: Not available.

Products of Biodegradation:
Possibly hazardous short term degradation products are not likely. However, long term degradation products may arise.

Toxicity of the Products of Biodegradation: The products of degradation are more toxic.

Special Remarks on the Products of Biodegradation: Not available.

Section 13: Disposal Considerations

Waste Disposal:

Section 14: Transport Information

DOT Classification: Class 3: Flammable liquid.

Identification: : 1,3,5-Trimethylbenzene : UN2325 PG: III

Special Provisions for Transport: Marine Pollutant

Section 15: Other Regulatory Information

Federal and State Regulations:
Florida: Mesitylene
New Jersey: Mesitylene
TSCA 8(b) inventory: Mesitylene

Other Regulations:
OSHA: Hazardous by definition of Hazard Communication Standard (29 CFR 1910.1200).
EINECS: This product is on the European Inventory of Existing Commercial Chemical Substances.

Other Classifications:

WHMIS (Canada):
CLASS B-3: Combustible liquid with a flash point between 37.8°C (100°F) and 93.3°C (200°F).

DSCL (EEC):
R10- Flammable.
R36/37- Irritating to eyes and respiratory system.

HMIS (U.S.A.):

Health Hazard: 0

Fire Hazard: 2

Reactivity: 0

Personal Protection: h

National Fire Protection Association (U.S.A.):

Health: 0

Flammability: 2

Reactivity: 0

Specific hazard:

Protective Equipment:
Gloves.
Lab coat.
Vapor respirator. Be sure to use an approved/certified respirator or equivalent. Wear appropriate respirator when ventilation is inadequate.
Splash goggles.

Section 16: Other Information

References: Not available.

Other Special Considerations: Not available.

Created: 10/09/2005 06:06 PM

Last Updated: 10/09/2005 06:06 PM

The information above is believed to be accurate and represents the best information currently available to us. However, we make no warranty of merchantability or any other warranty, express or implied, with respect to such information, and we assume no liability resulting from its use. Users should make their own investigations to determine the suitability of the information for their particular purposes. In no event shall ScienceLab.com be liable for any claims, losses, or damages of any third party or for lost profits or any special, indirect, incidental, consequential or exemplary damages, howsoever arising, even if ScienceLab.com has been advised of the possibility of such damages.

International Chemical Safety Cards

BENZO(B)FLUORANTHENE

ICSC: 0720

BENZO(B)FLUORANTHENE
Benzo(e)acephenanthrylene
2,3-Benzofluoroanthene
$C_{20}H_{12}$
Molecular mass: 252.3

CAS # 205-99-2
RTECS # CU1400000
ICSC # 0720

TYPES OF HAZARD/ EXPOSURE	ACUTE HAZARDS/ SYMPTOMS	PREVENTION	FIRST AID/ FIRE FIGHTING
FIRE	Combustible.	NO open flames.	Water spray, powder.
EXPLOSION			
EXPOSURE		PREVENT DISPERSION OF DUST! STRICT HYGIENE! AVOID ALL CONTACT!	IN ALL CASES CONSULT A DOCTOR!
• **INHALATION**		Local exhaust or breathing protection.	Fresh air, rest.
• **SKIN**	MAY BE ABSORBED!	Protective gloves. Protective clothing.	Remove contaminated clothes. Rinse and then wash skin with water and soap. Refer for medical attention. Wear protective gloves when administering first aid.
• **EYES**		Safety goggles or eye protection in combination with breathing protection.	First rinse with plenty of water for several minutes (remove contact lenses if easily possible), then take to a doctor.
• **INGESTION**		Do not eat, drink, or smoke during work.	Wear protective gloves when inducing vomiting. Induce vomiting (ONLY IN CONSCIOUS PERSONS!). Refer for medical attention.

SPILLAGE DISPOSAL	STORAGE	PACKAGING & LABELLING
Sweep spilled substance into containers. Carefully collect remainder, then remove to safe place. Do NOT let this chemical enter the environment.	Provision to contain effluent from fire extinguishing. Tightly closed.	Unbreakable packaging; put breakable packaging into closed unbreakable container.

SEE IMPORTANT INFORMATION ON BACK

ICSC: 0720

Prepared in the context of cooperation between the International Programme on Chemical Safety & the Commission of the European Communities © IPCS CEC 1993

International Chemical Safety Cards

BENZO(B)FLUORANTHENE

ICSC: 0720

I M P O R T A N T D A T A	**PHYSICAL STATE; APPEARANCE:** COLOURLESS TO YELLOW CRYSTALS. **PHYSICAL DANGERS:** **CHEMICAL DANGERS:** Upon heating, toxic fumes are formed. **OCCUPATIONAL EXPOSURE LIMITS (OELs):** TLV not established.	**ROUTES OF EXPOSURE:** The substance can be absorbed into the body by inhalation of its aerosol and through the skin. **INHALATION RISK:** Evaporation at 20°C is negligible; a harmful concentration of airborne particles can, however, be reached quickly. **EFFECTS OF SHORT-TERM EXPOSURE:** **EFFECTS OF LONG-TERM OR REPEATED EXPOSURE:** This substance is possibly carcinogenic to humans.
PHYSICAL PROPERTIES	Melting point: 168°C Solubility in water: none	Vapour pressure, Pa at 20°C: <10 Octanol/water partition coefficient as log Pow: 6.04
ENVIRONMENTAL DATA	This substance may be hazardous to the environment; special attention should be given to the total environment. In the food chain important to humans, bioaccumulation takes place, specifically in oils and fats.	

NOTES

Depending on the degree of exposure, periodic medical examination is indicated. Data are insufficiently available on the effect of this substance on human health, therefore utmost care must be taken. Do NOT take working clothes home.

ADDITIONAL INFORMATION

ICSC: 0720 **BENZO(B)FLUORANTHENE**

© IPCS, CEC, 1993

IMPORTANT LEGAL NOTICE:	Neither the CEC or the IPCS nor any person acting on behalf of the CEC or the IPCS is responsible for the use which might be made of this information. This card contains the collective views of the IPCS Peer Review Committee and may not reflect in all cases all the detailed requirements included in national legislation on the subject. The user should verify compliance of the cards with the relevant legislation in the country of use.

International Chemical Safety Cards

BENZO(K)FLUORANTHENE

ICSC: 0721

BENZO(K)FLUOROANTHENE
11,12-Benzofluoroanthene
Dibenzo(b,j,k)fluorene
$C_{20}H_{12}$
Molecular mass: 252.3

CAS # 207-08-9
RTECS # DF6350000
ICSC # 0721

TYPES OF HAZARD/ EXPOSURE	ACUTE HAZARDS/ SYMPTOMS	PREVENTION	FIRST AID/ FIRE FIGHTING
FIRE	Combustible.	NO open flames.	Water spray, powder.
EXPLOSION			
EXPOSURE		PREVENT DISPERSION OF DUST! STRICT HYGIENE! AVOID ALL CONTACT!	IN ALL CASES CONSULT A DOCTOR!
• **INHALATION**		Local exhaust or breathing protection.	Fresh air, rest. Refer for medical attention.
• **SKIN**	MAY BE ABSORBED!	Protective gloves. Protective clothing.	Remove contaminated clothes. Rinse and then wash skin with water and soap. Refer for medical attention. Wear protective gloves when administering first aid.
• **EYES**		Safety goggles or eye protection in combination with breathing protection if powder.	First rinse with plenty of water for several minutes (remove contact lenses if easily possible), then take to a doctor.
• **INGESTION**		Do not eat, drink, or smoke during work.	Wear protective gloves when inducing vomiting. Induce vomiting (ONLY IN CONSCIOUS PERSONS!). Refer for medical attention.

SPILLAGE DISPOSAL	STORAGE	PACKAGING & LABELLING
Sweep spilled substance into containers. Carefully collect remainder, then remove to safe place. Do NOT let this chemical enter the environment.	Provision to contain effluent from fire extinguishing. Separated from strong oxidants. Tightly closed.	

SEE IMPORTANT INFORMATION ON BACK

ICSC: 0721

Prepared in the context of cooperation between the International Programme on Chemical Safety & the Commission of the European Communities © IPCS CEC 1993

International Chemical Safety Cards

BENZO(K)FLUORANTHENE

ICSC: 0721

I M P O R T A N T D A T A	**PHYSICAL STATE; APPEARANCE:** YELLOW CRYSTALS. **PHYSICAL DANGERS:** **CHEMICAL DANGERS:** Upon heating, toxic fumes are formed. Reacts with strong oxidants. **OCCUPATIONAL EXPOSURE LIMITS (OELs):** TLV not established.	**ROUTES OF EXPOSURE:** The substance can be absorbed into the body by inhalation of its aerosol and through the skin. **INHALATION RISK:** Evaporation at 20°C is negligible; a harmful concentration of airborne particles can, however, be reached quickly. **EFFECTS OF SHORT-TERM EXPOSURE:** **EFFECTS OF LONG-TERM OR REPEATED EXPOSURE:** This substance is possibly carcinogenic to humans.
PHYSICAL PROPERTIES	Boiling point: 480°C Melting point: 215.7°C	Solubility in water: none Octanol/water partition coefficient as log Pow: 6.84
ENVIRONMENTAL DATA	This substance may be hazardous to the environment; special attention should be given to the total environment. In the food chain important to humans, bioaccumulation takes place, specifically in oils and fats.	

NOTES

Data are insufficiently available on the effect of this substance on human health, therefore utmost care must be taken. Do NOT take working clothes home.

ADDITIONAL INFORMATION

ICSC: 0721 **BENZO(K)FLUORANTHENE**

© IPCS, CEC, 1993

IMPORTANT LEGAL NOTICE:	Neither the CEC or the IPCS nor any person acting on behalf of the CEC or the IPCS is responsible for the use which might be made of this information. This card contains the collective views of the IPCS Peer Review Committee and may not reflect in all cases all the detailed requirements included in national legislation on the subject. The user should verify compliance of the cards with the relevant legislation in the country of use.

International Chemical Safety Cards

BENZ(a)ANTHRACENE

ICSC: 0385

BENZ(a)ANTHRACENE
1,2-Benzoanthracene
Benzo(a)anthracene
2,3-Benzphenanthrene
Naphthanthracene
$C_{18}H_{12}$
Molecular mass: 228.3

CAS # 56-55-3
RTECS # CV9275000
ICSC # 0385
EC # 601-033-00-9

TYPES OF HAZARD/ EXPOSURE	ACUTE HAZARDS/ SYMPTOMS	PREVENTION	FIRST AID/ FIRE FIGHTING
FIRE	Combustible.		Water spray, powder. In case of fire in the surroundings: all extinguishing agents allowed.
EXPLOSION	Finely dispersed particles form explosive mixtures in air.	Prevent deposition of dust; closed system, dust explosion-proof electrical equipment and lighting.	
EXPOSURE		AVOID ALL CONTACT!	
• **INHALATION**		Local exhaust or breathing protection.	Fresh air, rest.
• **SKIN**		Protective gloves. Protective clothing.	Remove contaminated clothes. Rinse and then wash skin with water and soap.
• **EYES**		Safety goggles, face shield, or eye protection in combination with breathing protection.	First rinse with plenty of water for several minutes (remove contact lenses if easily possible), then take to a doctor.
• **INGESTION**		Do not eat, drink, or smoke during work. Wash hands before eating.	Rinse mouth.

SPILLAGE DISPOSAL	STORAGE	PACKAGING & LABELLING
Sweep spilled substance into sealable containers; if appropriate, moisten first to prevent dusting. Carefully collect remainder, then remove to safe place (extra personal protection: complete protective clothing including self-contained breathing apparatus).	Well closed.	T symbol R: 45 S: 53-45

SEE IMPORTANT INFORMATION ON BACK

ICSC: 0385

Prepared in the context of cooperation between the International Programme on Chemical Safety & the Commission of the European Communities © IPCS CEC 1993

International Chemical Safety Cards

BENZ(a)ANTHRACENE

ICSC: 0385

IMPORTANT DATA

PHYSICAL STATE; APPEARANCE:
COLOURLESS TO YELLOW-BROWN FLUORESCENT FLAKES OR POWDER.

PHYSICAL DANGERS:
Dust explosion possible if in powder or granular form, mixed with air.

CHEMICAL DANGERS:

OCCUPATIONAL EXPOSURE LIMITS (OELs):
TLV not established.

ROUTES OF EXPOSURE:
The substance can be absorbed into the body by inhalation, through the skin and by ingestion.

INHALATION RISK:
Evaporation at 20°C is negligible; a harmful concentration of airborne particles can, however, be reached quickly.

EFFECTS OF SHORT-TERM EXPOSURE:

EFFECTS OF LONG-TERM OR REPEATED EXPOSURE:
This substance is probably carcinogenic to humans.

PHYSICAL PROPERTIES

Sublimation point: 435°C
Melting point: 162°C
Relative density (water = 1): 1.274

Solubility in water: none
Vapour pressure, Pa at 20°C: 292
Octanol/water partition coefficient as log Pow: 5.61

ENVIRONMENTAL DATA

In the food chain important to humans, bioaccumulation takes place, specifically in seafood.

NOTES

This substance is one of many polycyclic aromatic hydrocarbons - standards are usually established for them as mixtures, e.g., coal tar pitch volatiles. However, it may be encountered as a laboratory chemical in its pure form. Insufficient data are available on the effect of this substance on human health, therefore utmost care must be taken. Do NOT take working clothes home. Tetraphene is a common name.

ADDITIONAL INFORMATION

© IPCS, CEC, 1993

IMPORTANT LEGAL NOTICE:	Neither the CEC or the IPCS nor any person acting on behalf of the CEC or the IPCS is responsible for the use which might be made of this information. This card contains the collective views of the IPCS Peer Review Committee and may not reflect in all cases all the detailed requirements included in national legislation on the subject. The user should verify compliance of the cards with the relevant legislation in the country of use.

Material Safety Data Sheet

Benzo[a]pyrene, 98%

ACC# 37175

Section 1 - Chemical Product and Company Identification

MSDS Name: Benzo[a]pyrene, 98%
Catalog Numbers: AC105600000, AC105600010, AC105601000, AC377200000, AC377200010, AC377201000 AC377201000
Synonyms: 3,4-Benzopyrene; 3,4-Benzpyrene; Benzo[def]chrysene.
Company Identification:

Acros Organics N.V.
One Reagent Lane
Fair Lawn, NJ 07410

For information in North America, call: 800-ACROS-01
For emergencies in the US, call CHEMTREC: 800-424-9300

Section 2 - Composition, Information on Ingredients

CAS#	Chemical Name	Percent	EINECS/ELINCS
50-32-8	Benzo[a]pyrene	>96	200-028-5

Section 3 - Hazards Identification

EMERGENCY OVERVIEW

Appearance: yellow to brown powder.
Danger! May cause harm to the unborn child. May impair fertility. May cause eye, skin, and respiratory tract irritation. Toxic to aquatic organisms, may cause long-term adverse effects in the aquatic environment. Cancer hazard. May cause allergic skin reaction. May cause heritable genetic damage.
Target Organs: Reproductive system, skin.

Potential Health Effects

Eye: May cause eye irritation.
Skin: May cause skin irritation. May be harmful if absorbed through the skin. May cause an allergic reaction in certain individuals.
Ingestion: May cause irritation of the digestive tract. The toxicological properties of this substance have not been fully investigated. May be harmful if swallowed.
Inhalation: May cause respiratory tract irritation. The toxicological properties of this substance have not been fully investigated. May be harmful if inhaled.
Chronic: May cause cancer in humans. May cause reproductive and fetal effects. Laboratory experiments have resulted in mutagenic effects.

Section 4 - First Aid Measures

Eyes: Immediately flush eyes with plenty of water for at least 15 minutes, occasionally lifting the upper and lower eyelids. Get medical aid.
Skin: Get medical aid. Flush skin with plenty of water for at least 15 minutes while removing contaminated clothing and shoes. Wash clothing before reuse.
Ingestion: Never give anything by mouth to an unconscious person. Get medical aid. Do NOT induce vomiting. If conscious and alert, rinse mouth and drink 2-4 cupfuls of milk or water.
Inhalation: Remove from exposure and move to fresh air immediately. If not breathing, give artificial respiration. If breathing is difficult, give oxygen. Get medical aid.
Notes to Physician: Treat symptomatically and supportively.

Section 5 - Fire Fighting Measures

General Information: As in any fire, wear a self-contained breathing apparatus in pressure-demand, MSHA/NIOSH (approved or equivalent), and full protective gear. During a fire, irritating and highly toxic gases may be generated by thermal decomposition or combustion.
Extinguishing Media: Use water spray, dry chemical, carbon dioxide, or appropriate foam.
Flash Point: Not available.
Autoignition Temperature: Not available.
Explosion Limits, Lower: Not available.
Upper: Not available.
NFPA Rating: (estimated) Health: 2; Flammability: 0; Instability: 0

Section 6 - Accidental Release Measures

General Information: Use proper personal protective equipment as indicated in Section 8.
Spills/Leaks: Clean up spills immediately, observing precautions in the Protective Equipment section. Sweep up, then place into a suitable container for disposal. Avoid generating dusty conditions. Provide ventilation.

Section 7 - Handling and Storage

Handling: Wash thoroughly after handling. Use with adequate ventilation. Minimize dust generation and accumulation. Avoid contact with eyes, skin, and clothing. Keep container tightly closed. Avoid ingestion and inhalation.
Storage: Store in a tightly closed container. Store in a cool, dry, well-ventilated area away from incompatible substances.

Section 8 - Exposure Controls, Personal Protection

Engineering Controls: Facilities storing or utilizing this material should be equipped with an eyewash facility and a safety shower. Use adequate ventilation to keep airborne concentrations low.
Exposure Limits

Chemical Name	ACGIH	NIOSH	OSHA - Final PELs

Benzo[a]pyrene	0.2 mg/m3 TWA (as benzene soluble aerosol) (listed under Coal tar pitches).	0.1 mg/m3 TWA (cyclohexane-extractable fraction) (listed under Coal tar pitches).80 mg/m3 IDLH (listed under Coal tar pitches).	0.2 mg/m3 TWA (as benzene soluble fraction) (listed under Coal tar pitches).

OSHA Vacated PELs: Benzo[a]pyrene: No OSHA Vacated PELs are listed for this chemical.
Personal Protective Equipment
Eyes: Wear appropriate protective eyeglasses or chemical safety goggles as described by OSHA's eye and face protection regulations in 29 CFR 1910.133 or European Standard EN166.
Skin: Wear appropriate protective gloves to prevent skin exposure.
Clothing: Wear appropriate protective clothing to prevent skin exposure.
Respirators: A respiratory protection program that meets OSHA's 29 CFR 1910.134 and ANSI Z88.2 requirements or European Standard EN 149 must be followed whenever workplace conditions warrant respirator use.

Section 9 - Physical and Chemical Properties

Physical State: Powder
Appearance: yellow to brown
Odor: faint aromatic odor
pH: Not available.
Vapor Pressure: Not available.
Vapor Density: Not available.
Evaporation Rate: Not available.
Viscosity: Not available.
Boiling Point: 495 deg C @ 760 mm Hg
Freezing/Melting Point:175 - 179 deg C
Decomposition Temperature: Not available.
Solubility: 1.60x10-3 mg/l @25°C
Specific Gravity/Density: Not available.
Molecular Formula:C20H12
Molecular Weight:252.31

Section 10 - Stability and Reactivity

Chemical Stability: Stable under normal temperatures and pressures.
Conditions to Avoid: Dust generation.
Incompatibilities with Other Materials: Strong oxidizing agents.
Hazardous Decomposition Products: Carbon monoxide, carbon dioxide.
Hazardous Polymerization: Has not been reported.

Section 11 - Toxicological Information

RTECS#:
CAS# 50-32-8: DJ3675000
LD50/LC50:

Not available.

Carcinogenicity:
CAS# 50-32-8:

- **ACGIH:** A2 - Suspected Human Carcinogen
- **California:** carcinogen, initial date 7/1/87
- **NTP:** Suspect carcinogen
- **IARC:** Group 1 carcinogen (listed as Coal tar pitches).

Epidemiology: No information found
Teratogenicity: No information found
Reproductive Effects: Adverse reproductive effects have occurred in experimental animals.
Mutagenicity: Mutagenic effects have occurred in humans.Mutagenic effects have occurred in experimental animals.
Neurotoxicity: No information found
Other Studies:

Section 12 - Ecological Information

No information available.

Section 13 - Disposal Considerations

Chemical waste generators must determine whether a discarded chemical is classified as a hazardous waste. US EPA guidelines for the classification determination are listed in 40 CFR Parts 261.3. Additionally, waste generators must consult state and local hazardous waste regulations to ensure complete and accurate classification.
RCRA P-Series: None listed.
RCRA U-Series:
CAS# 50-32-8: waste number U022.

Section 14 - Transport Information

	US DOT	Canada TDG
Shipping Name:	NOT REGULATED FOR DOMESTIC TRANSPORT	ENVIRONMENTALLY HAZARDOUS SUBSTANCE, SOL (Benzo{a} pyrene)
Hazard Class:		9
UN Number:		UN3077
Packing Group:		III

Section 15 - Regulatory Information

US FEDERAL

TSCA

CAS# 50-32-8 is listed on the TSCA inventory.

Health & Safety Reporting List

None of the chemicals are on the Health & Safety Reporting List.

Chemical Test Rules

None of the chemicals in this product are under a Chemical Test Rule.

Section 12b

None of the chemicals are listed under TSCA Section 12b.

TSCA Significant New Use Rule

None of the chemicals in this material have a SNUR under TSCA.

CERCLA Hazardous Substances and corresponding RQs

CAS# 50-32-8: 1 lb final RQ; 0.454 kg final RQ

SARA Section 302 Extremely Hazardous Substances

None of the chemicals in this product have a TPQ.

SARA Codes

CAS # 50-32-8: immediate, delayed.

Section 313

This material contains Benzo[a]pyrene (CAS# 50-32-8, >96%),which is subject to the reporting requirements of Section 313 of SARA Title III and 40 CFR

Clean Air Act:

This material does not contain any hazardous air pollutants.
This material does not contain any Class 1 Ozone depletors.
This material does not contain any Class 2 Ozone depletors.

Clean Water Act:

None of the chemicals in this product are listed as Hazardous Substances under the CWA.
CAS# 50-32-8 is listed as a Priority Pollutant under the Clean Water Act.
None of the chemicals in this product are listed as Toxic Pollutants under the CWA.

OSHA:

None of the chemicals in this product are considered highly hazardous by OSHA.

STATE

CAS# 50-32-8 can be found on the following state right to know lists: California, New Jersey, Pennsylvania, Minnesota, Massachusetts.

California Prop 65

The following statement(s) is(are) made in order to comply with the California Safe Drinking Water Act:

WARNING: This product contains Benzo[a]pyrene, a chemical known to the state of California to cause cancer.

California No Significant Risk Level: CAS# 50-32-8: 0.06 æg/day NSRL

European / International Regulations

European Labeling in Accordance with EC Directives

Hazard Symbols:

T N

Risk Phrases:

R 43 May cause sensitization by skin contact.
R 45 May cause cancer.
R 46 May cause heritable genetic damage.
R 60 May impair fertility.
R 61 May cause harm to the unborn child.
R 50/53 Very toxic to aquatic organisms, may cause long-term adverse effects in the aquatic environment.

Safety Phrases:

S 45 In case of accident or if you feel unwell, seek medical advice immediately (show the label where possible).

S 53 Avoid exposure - obtain special instructions before use.
S 60 This material and its container must be disposed of as hazardou
s waste.
S 61 Avoid release to the environment. Refer to special instructions
/safety data sheets.

WGK (Water Danger/Protection)
CAS# 50-32-8: No information available.
Canada - DSL/NDSL
CAS# 50-32-8 is listed on Canada's DSL List.
Canada - WHMIS
This product has a WHMIS classification of D2A.
This product has been classified in accordance with the hazard criteria of the Controlled Products Regulations and the MSDS contains all of the information required by those regulations.
Canadian Ingredient Disclosure List
CAS# 50-32-8 is listed on the Canadian Ingredient Disclosure List.

Section 16 - Additional Information

MSDS Creation Date: 9/02/1997
Revision #7 Date: 6/30/2006

The information above is believed to be accurate and represents the best information currently available to us. However, we make no warranty of merchantability or any other warranty, express or implied, with respect to such information, and we assume no liability resulting from its use. Users should make their own investigations to determine the suitability of the information for their particular purposes. In no event shall Fisher be liable for any claims, losses, or damages of any third party or for lost profits or any special, indirect, incidental, consequential or exemplary damages, howsoever arising, even if Fisher has been advised of the possibility of such damages.

Material Safety Data Sheet

Chrysene, 98%

ACC# 95251

Section 1 - Chemical Product and Company Identification

MSDS Name: Chrysene, 98%
Catalog Numbers: AC224140000, AC224140010, AC224140050, AC224145000
Synonyms: 1,2-Benzophenanthrene; Benzo(a)phenanthrene; 1,2,5,6-Dibenzonaphthalene.
Company Identification:

Acros Organics N.V.
One Reagent Lane
Fair Lawn, NJ 07410

For information in North America, call: 800-ACROS-01
For emergencies in the US, call CHEMTREC: 800-424-9300

Section 2 - Composition, Information on Ingredients

CAS#	Chemical Name	Percent	EINECS/ELINCS
218-01-9	Chrysene	98	205-923-4

Section 3 - Hazards Identification

EMERGENCY OVERVIEW

Appearance: very light beige solid.
Caution! May cause eye and skin irritation. May cause respiratory tract irritation. May cause cancer in humans.
Target Organs: Liver, skin.

Potential Health Effects

Eye: May cause eye irritation.
Skin: May cause skin irritation.
Ingestion: May cause gastrointestinal irritation with nausea, vomiting and diarrhea.
Inhalation: May cause respiratory tract irritation.
Chronic: May cause cancer according to animal studies.

Section 4 - First Aid Measures

Eyes: Immediately flush eyes with plenty of water for at least 15 minutes, occasionally lifting the upper and lower eyelids. Get medical aid.
Skin: Get medical aid. Immediately flush skin with plenty of water for at least 15 minutes while removing contaminated clothing and shoes. Wash clothing before reuse.
Ingestion: Do not induce vomiting. If victim is conscious and alert, give 2-4 cupfuls of milk or water. Never give anything by mouth to an unconscious person. Get medical aid immediately.
Inhalation: Get medical aid immediately. Remove from exposure and move to fresh air

immediately. If not breathing, give artificial respiration. If breathing is difficult, give oxygen.
Notes to Physician: Treat symptomatically and supportively.

Section 5 - Fire Fighting Measures

General Information: As in any fire, wear a self-contained breathing apparatus in pressure-demand, MSHA/NIOSH (approved or equivalent), and full protective gear. During a fire, irritating and highly toxic gases may be generated by thermal decomposition or combustion. This material in sufficient quantity and reduced particle size is capable of creating a dust explosion.
Extinguishing Media: Use water spray, dry chemical, carbon dioxide, or chemical foam.
Flash Point: Not applicable.
Autoignition Temperature: Not available.
Explosion Limits, Lower: Not available.
Upper: Not available.
NFPA Rating: (estimated) Health: ; Flammability: 1; Instability:

Section 6 - Accidental Release Measures

General Information: Use proper personal protective equipment as indicated in Section 8.
Spills/Leaks: Vacuum or sweep up material and place into a suitable disposal container. Clean up spills immediately, observing precautions in the Protective Equipment section. Wear a self contained breathing apparatus and appropriate personal protection. (See Exposure Controls, Personal Protection section). Provide ventilation.

Section 7 - Handling and Storage

Handling: Wash thoroughly after handling. Wash hands before eating. Avoid contact with eyes, skin, and clothing. Use only with adequate ventilation. Avoid breathing dust.
Storage: Store in a tightly closed container. Store in a cool, dry area away from incompatible substances.

Section 8 - Exposure Controls, Personal Protection

Engineering Controls: Facilities storing or utilizing this material should be equipped with an eyewash facility and a safety shower. Use process enclosure, local exhaust ventilation, or other engineering controls to control airborne levels.
Exposure Limits

Chemical Name	ACGIH	NIOSH	OSHA - Final PELs
Chrysene	0.2 mg/m3 TWA (as benzene soluble aerosol) (listed under Coal tar pitches).	0.1 mg/m3 TWA (cyclohexane-extractable fraction) (listed under Coal tar pitches).80 mg/m3 IDLH (listed under Coal tar pitches).	0.2 mg/m3 TWA (as benzene soluble fraction) (listed under Coal tar pitches).

OSHA Vacated PELs: Chrysene: No OSHA Vacated PELs are listed for this chemical.
Personal Protective Equipment
Eyes: Wear appropriate protective eyeglasses or chemical safety goggles as described by OSHA's eye and face protection regulations in 29 CFR 1910.133 or European Standard EN166.
Skin: Wear appropriate protective gloves to prevent skin exposure.
Clothing: Wear appropriate protective clothing to prevent skin exposure.
Respirators: Follow the OSHA respirator regulations found in 29 CFR 1910.134 or European Standard EN 149. Use a NIOSH/MSHA or European Standard EN 149 approved respirator if exposure limits are exceeded or if irritation or other symptoms are experienced.

Section 9 - Physical and Chemical Properties

Physical State: Solid
Appearance: very light beige
Odor: Not available.
pH: Not available.
Vapor Pressure: Not available.
Vapor Density: Not available.
Evaporation Rate: Not available.
Viscosity: Not available.
Boiling Point: 448 deg C @ 760 mm Hg
Freezing/Melting Point:250-255 deg C
Decomposition Temperature: Not available.
Solubility: insoluble
Specific Gravity/Density: Not available.
Molecular Formula:C18H12
Molecular Weight:228.29

Section 10 - Stability and Reactivity

Chemical Stability: Stable under normal temperatures and pressures.
Conditions to Avoid: Dust generation.
Incompatibilities with Other Materials: Strong oxidizing agents.
Hazardous Decomposition Products: Carbon monoxide, carbon dioxide.
Hazardous Polymerization: Has not been reported.

Section 11 - Toxicological Information

RTECS#:
CAS# 218-01-9: GC0700000
LD50/LC50:
Not available.

Carcinogenicity:
CAS# 218-01-9:

- **ACGIH:** A3 - Confirmed animal carcinogen with unknown relevance to humans

- **California:** carcinogen, initial date 1/1/90
- **NTP:** Known carcinogen (listed as Coal tar pitches).
- **IARC:** Group 1 carcinogen (listed as Coal tar pitches).

Epidemiology: No information found
Teratogenicity: No information found
Reproductive Effects: No information found
Mutagenicity: Chrysene was mutagenic to S. Typhimurium in the presence of an exogenous metabolic system.
Neurotoxicity: No information found
Other Studies:

Section 12 - Ecological Information

Ecotoxicity: Water flea LC50 = 1.9 mg/L; 2 Hr.; Unspecified Fish toxicity : LC50 (96hr) Neauthes arenacedentata >1ppm.(Rossi,S.S. et al Marine Pollut. Bull. 1978) Invertebrate toxicity : lethal treshold concentration (24hr) Daphnia Magna 0,7æg/l.(* Newsted,J.L. et al Environ. Toxicol. Chem. 1987) Bioaccumulation : 24hr Daphnia Magna log bioconcentration factor 3.7845 (*)
Environmental: Degradation studies : biodegradated by white rot fungus (Proc.Annu.Meet.Am.Wood-Preserv.Assoc.1989) May be utilised by axenic cultures of microorganisms e.g. Pseudomonas pancimobilis EPA505, which may have novel degradative systems(Mueller,J.G. et al ppl.Environ.Microbiol.1990; Mueller, J.G. et al Environ.Sci.Technol.1991).
Physical: Not found.
Other: No information available.

Section 13 - Disposal Considerations

Chemical waste generators must determine whether a discarded chemical is classified as a hazardous waste. US EPA guidelines for the classification determination are listed in 40 CFR Parts 261.3. Additionally, waste generators must consult state and local hazardous waste regulations to ensure complete and accurate classification.
RCRA P-Series: None listed.
RCRA U-Series:
CAS# 218-01-9: waste number U050.

Section 14 - Transport Information

	US DOT	Canada TDG
Shipping Name:	Not regulated as a hazardous material	No information available.
Hazard Class:		
UN Number:		
Packing Group:		

Section 15 - Regulatory Information

US FEDERAL

TSCA
CAS# 218-01-9 is listed on the TSCA inventory.
Health & Safety Reporting List
None of the chemicals are on the Health & Safety Reporting List.
Chemical Test Rules
None of the chemicals in this product are under a Chemical Test Rule.
Section 12b
None of the chemicals are listed under TSCA Section 12b.
TSCA Significant New Use Rule
None of the chemicals in this material have a SNUR under TSCA.
CERCLA Hazardous Substances and corresponding RQs
CAS# 218-01-9: 100 lb final RQ; 45.4 kg final RQ
SARA Section 302 Extremely Hazardous Substances
None of the chemicals in this product have a TPQ.
Section 313
This material contains Chrysene (CAS# 218-01-9, 98%),which is subject to the reporting requirements of Section 313 of SARA Title III and 40 CFR Part 373.
Clean Air Act:
This material does not contain any hazardous air pollutants.
This material does not contain any Class 1 Ozone depletors.
This material does not contain any Class 2 Ozone depletors.
Clean Water Act:
None of the chemicals in this product are listed as Hazardous Substances under the CWA.
CAS# 218-01-9 is listed as a Priority Pollutant under the Clean Water Act.
None of the chemicals in this product are listed as Toxic Pollutants under the CWA.
OSHA:
None of the chemicals in this product are considered highly hazardous by OSHA.
STATE
CAS# 218-01-9 can be found on the following state right to know lists: California, New Jersey, Pennsylvania, Minnesota, Massachusetts.

California Prop 65
The following statement(s) is(are) made in order to comply with the California Safe Drinking Water Act:
WARNING: This product contains Chrysene, a chemical known to the state of California to cause cancer.
California No Significant Risk Level: CAS# 218-01-9: 0.35 æg/day NSRL (oral)

European / International Regulations

European Labeling in Accordance with EC Directives
Hazard Symbols:
T
Risk Phrases:
R 45 May cause cancer.
R 50/53 Very toxic to aquatic organisms, may cause long-term adverse effects in the aquatic environment.

Safety Phrases:
S 45 In case of accident or if you feel unwell, seek medical advice immediately (show the label where possible).
S 53 Avoid exposure - obtain special instructions before use.
S 60 This material and its container must be disposed of as hazardou s waste.

S 61 Avoid release to the environment. Refer to special instructions /safety data sheets.

WGK (Water Danger/Protection)

CAS# 218-01-9: No information available.

Canada - DSL/NDSL

CAS# 218-01-9 is listed on Canada's DSL List.

Canada - WHMIS

This product has a WHMIS classification of D2A.

This product has been classified in accordance with the hazard criteria of the Controlled Products Regulations and the MSDS contains all of the information required by those regulations.

Canadian Ingredient Disclosure List

CAS# 218-01-9 is listed on the Canadian Ingredient Disclosure List.

Section 16 - Additional Information

MSDS Creation Date: 6/30/1999
Revision #4 Date: 10/03/2005

The information above is believed to be accurate and represents the best information currently available to us. However, we make no warranty of merchantability or any other warranty, express or implied, with respect to such information, and we assume no liability resulting from its use. Users should make their own investigations to determine the suitability of the information for their particular purposes. In no event shall Fisher be liable for any claims, losses, or damages of any third party or for lost profits or any special, indirect, incidental, consequential or exemplary damages, howsoever arising, even if Fisher has been advised of the possibility of such damages.

Material Safety Data Sheet

Fluoranthene, 98%

ACC# 80991

Section 1 - Chemical Product and Company Identification

MSDS Name: Fluoranthene, 98%
Catalog Numbers: AC119170000, AC119170250, AC119171000, AC119175000
Synonyms: 1,2-(1,8-Naphthalenediyl)benzene; 1,2-(1,8-Naphthylene)benzene; 1,2-Benzacenaphthene; Benzene, 1,2-(1,8-naphthylene)-; Benzo(j,k)fluorene; Benzo(jk)fluoranthene; Benzo(jk)fluorene
Company Identification:

Acros Organics N.V.
One Reagent Lane
Fair Lawn, NJ 07410

For information in North America, call: 800-ACROS-01
For emergencies in the US, call CHEMTREC: 800-424-9300

Section 2 - Composition, Information on Ingredients

CAS#	Chemical Name	Percent	EINECS/ELINCS
206-44-0	Fluoranthene	98	205-912-4

Section 3 - Hazards Identification

EMERGENCY OVERVIEW

Appearance: yellow needles.
Caution! Harmful. Causes eye and skin irritation and possible burns. May be harmful if absorbed through the skin. May be harmful if swallowed. May cause heart and liver injury.
Target Organs: Heart, liver, lungs.

Potential Health Effects

Eye: Causes eye irritation and possible burns.
Skin: May be harmful if absorbed through the skin. Causes severe skin irritation and possible burns.
Ingestion: May be harmful if swallowed. May cause rapid heartbeat and cardiac arrythmias. May cause liver injury, pulmonary edema, and respiratory arrest. May cause gastrointestinal disturbances such as nausea.
Inhalation: May cause effects similar to those described for ingestion. May produce cardiac failure and pulmonary edema.
Chronic: Prolonged or repeated skin contact may cause defatting and dermatitis.

Section 4 - First Aid Measures

Eyes: Immediately flush eyes with plenty of water for at least 15 minutes, occasionally lifting the

upper and lower eyelids. Get medical aid imme diately. Do NOT allow victim to rub eyes or keep eyes closed. Extensiv e irrigation with water is required (at least 30 minutes).
Skin: Get medical aid immediately. Immediately flush skin with plenty of water for at least 15 minutes while removing contaminated clothing and shoes. Remove contaminated clothing and shoes.
Ingestion: Never give anything by mouth to an unconscious person. Get medical aid immediately. Do NOT induce vomiting. If conscious and alert, rinse mouth and drink 2-4 cupfuls of milk or water.

Inhalation: Remove from exposure and move to fresh air immediately. If not breathing, give artificial respiration. If breathing is difficult, give oxygen. Get medical aid.
Notes to Physician: Treat symptomatically and supportively.

Section 5 - Fire Fighting Measures

General Information: As in any fire, wear a self-contained breathing apparatus in pressure-demand, MSHA/NIOSH (approved or equivalent), and full protective gear. During a fire, irritating and highly toxic gases may be generated by thermal decomposition or combustion.
Extinguishing Media: In case of fire, use water, dry chemical, chemical foam, or alcohol-resistant foam.
Flash Point: Not applicable.
Autoignition Temperature: Not applicable.
Explosion Limits, Lower: Not available.
Upper: Not available.
NFPA Rating: (estimated) Health: 2; Flammability: 0; Instability: 0

Section 6 - Accidental Release Measures

General Information: Use proper personal protective equipment as indicated in Section 8.
Spills/Leaks: Sweep up, then place into a suitable container for disposal. Avoid generating dusty conditions. Provide ventilation.

Section 7 - Handling and Storage

Handling: Wash thoroughly after handling. Remove contaminated clothing and wash before reuse. Use only in a well-ventilated area. Do not get in eyes, on skin, or on clothing. Do not ingest or inhale. Use only in a chemical fume hood. Do not breathe dust.
Storage: Keep containers tightly closed. Store in a cool, dry area away from incompatible substances.

Section 8 - Exposure Controls, Personal Protection

Engineering Controls: Facilities storing or utilizing this material should be equipped with an eyewash facility and a safety shower. Use adequate ventilation to keep airborne concentrations low.
Exposure Limits

Chemical Name	ACGIH	NIOSH	OSHA - Final PELs
Fluoranthene	none listed	none listed	none listed

OSHA Vacated PELs: Fluoranthene: No OSHA Vacated PELs are listed for this chemical.
Personal Protective Equipment
Eyes: Wear appropriate protective eyeglasses or chemical safety goggles as described by OSHA's eye and face protection regulations in 29 CFR 1910.133 or European Standard EN166.
Skin: Wear appropriate protective gloves and clothing to prevent skin exposure.
Clothing: Wear appropriate protective clothing to prevent skin exposure.
Respirators: A respiratory protection program that meets OSHA's 29 CFR 1910.134 and ANSI Z88.2 requirements or European Standard EN 149 must be followed whenever workplace conditions warrant respirator use.

Section 9 - Physical and Chemical Properties

Physical State: Needles
Appearance: yellow
Odor: None reported.
pH: Not available.
Vapor Pressure: 0.01 mm Hg @ 20 deg C
Vapor Density: Not available.
Evaporation Rate: Not available.
Viscosity: Not available.
Boiling Point: 384 deg C @ 760.00mmHg
Freezing/Melting Point:107.00 - 110.00 deg C
Decomposition Temperature: Not available.
Solubility: insoluble
Specific Gravity/Density:1.252 g/cm3
Molecular Formula:C16H10
Molecular Weight:202.25

Section 10 - Stability and Reactivity

Chemical Stability: Stable under normal temperatures and pressures.
Conditions to Avoid: Incompatible materials, strong oxidants.
Incompatibilities with Other Materials: Strong oxidizing agents.
Hazardous Decomposition Products: Carbon monoxide, carbon dioxide, acrid smoke and fumes.
Hazardous Polymerization: Has not been reported.

Section 11 - Toxicological Information

RTECS#:
CAS# 206-44-0: LL4025000
LD50/LC50:
CAS# 206-44-0:
Oral, rat: LD50 = 2 gm/kg;

Skin, rabbit: LD50 = 3180 mg/kg;
.

Carcinogenicity:
CAS# 206-44-0: Not listed by ACGIH, IARC, NTP, or CA Prop 65.

Epidemiology: IARC Group 3: Limited or insufficient evidence for carcinogenicity in both animals and humans.Experimental tumorigenic data has been reported.
Teratogenicity: No information found
Reproductive Effects: No information found
Mutagenicity: Mutation in microorganisms: Salmonella typhimurium = 5ug/plate.Mutation in mammalian somatic cells: Human Lymphocyte = 2 umol/L.
Neurotoxicity: No information found
Other Studies:

Section 12 - Ecological Information

Ecotoxicity: Fish: Bluegill/Sunfish: 3980 um/L; 96 H; (not specified) No data available.
Environmental: Remains in the upper few cm of soil, but can be transported to groundwater. Biodegrades from soil in a few years. Will not volatilize from soil or water. Rapidly absorbed to sediment and particulates and will readily bioconcentrate. Unadsorbed substance in water will degrade by photolysis in a days to weeks. Stable in sediment for decades or more. In the atmostphere, photodegrades with half life of 4 - 5 days, but may transport long distances without settling or raining out.
Physical: No information available.
Other: No information available.

Section 13 - Disposal Considerations

Chemical waste generators must determine whether a discarded chemical is classified as a hazardous waste. US EPA guidelines for the classification determination are listed in 40 CFR Parts 261.3. Additionally, waste generators must consult state and local hazardous waste regulations to ensure complete and accurate classification.
RCRA P-Series: None listed.
RCRA U-Series:
CAS# 206-44-0: waste number U120.

Section 14 - Transport Information

	US DOT	Canada TDG
Shipping Name:	Not regulated as a hazardous material	No information available.
Hazard Class:		
UN Number:		
Packing Group:		

Section 15 - Regulatory Information

US FEDERAL

TSCA
CAS# 206-44-0 is listed on the TSCA inventory.
Health & Safety Reporting List
None of the chemicals are on the Health & Safety Reporting List.
Chemical Test Rules
None of the chemicals in this product are under a Chemical Test Rule.
Section 12b
None of the chemicals are listed under TSCA Section 12b.
TSCA Significant New Use Rule
None of the chemicals in this material have a SNUR under TSCA.
CERCLA Hazardous Substances and corresponding RQs
CAS# 206-44-0: 100 lb final RQ; 45.4 kg final RQ
SARA Section 302 Extremely Hazardous Substances
None of the chemicals in this product have a TPQ.
SARA Codes
CAS # 206-44-0: immediate.
Section 313
This material contains Fluoranthene (CAS# 206-44-0, 98%),which is subject to the reporting requirements of Section 313 of SARA Title III and 40 CFR Part 373.
Clean Air Act:
This material does not contain any hazardous air pollutants.
This material does not contain any Class 1 Ozone depletors.
This material does not contain any Class 2 Ozone depletors.
Clean Water Act:
None of the chemicals in this product are listed as Hazardous Substances under the CWA.
CAS# 206-44-0 is listed as a Priority Pollutant under the Clean Water Act. CAS# 206-44-0 is listed as a Toxic Pollutant under the Clean Water Act.
OSHA:
None of the chemicals in this product are considered highly hazardous by OSHA.
STATE
CAS# 206-44-0 can be found on the following state right to know lists: California, New Jersey, Pennsylvania, Massachusetts.

California Prop 65

California No Significant Risk Level: None of the chemicals in this product are listed.

European/International Regulations

European Labeling in Accordance with EC Directives
Hazard Symbols:
XN
Risk Phrases:
R 21/22 Harmful in contact with skin and if swallowed.

Safety Phrases:
S 22 Do not breathe dust.
S 24/25 Avoid contact with skin and eyes.

WGK (Water Danger/Protection)
CAS# 206-44-0: No information available.
Canada - DSL/NDSL
CAS# 206-44-0 is listed on Canada's NDSL List.
Canada - WHMIS

This product has a WHMIS classification of D2B.
This product has been classified in accordance with the hazard criteria of the Controlled Products Regulations and the MSDS contains all of the information required by those regulations.

Canadian Ingredient Disclosure List

CAS# 206-44-0 is listed on the Canadian Ingredient Disclosure List.

Section 16 - Additional Information

MSDS Creation Date: 9/02/1997
Revision #5 Date: 10/03/2005

The information above is believed to be accurate and represents the best information currently available to us. However, we make no warranty of merchantability or any other warranty, express or implied, with respect to such information, and we assume no liability resulting from its use. Users should make their own investigations to determine the suitability of the information for their particular purposes. In no event shall Fisher be liable for any claims, losses, or damages of any third party or for lost profits or any special, indirect, incidental, consequential or exemplary damages, howsoever arising, even if Fisher has been advised of the possibility of such damages.

MSDS Number: **L2347** * * * * * *Effective Date:* ***08/10/04*** * * * * * *Supercedes:* ***11/02/01***

MSDS **Material Safety Data Sheet**

From: **Mallinckrodt Baker, Inc.**
222 Red School Lane
Phillipsburg, NJ 08865

Mallinckrodt CHEMICALS J.T.Baker

24 Hour Emergency Telephone: 908-859-2151
CHEMTREC: 1-800-424-9300

National Response in Canada
CANUTEC: 613-996-6666

Outside U.S. and Canada
Chemtrec: 703-527-3887

NOTE: CHEMTREC, CANUTEC and National Response Center emergency numbers to be used only in the event of chemical emergencies involving a spill, leak, fire, exposure or accident involving chemicals.

All non-emergency questions should be directed to Customer Service (1-800-582-2537) for assistance.

LEAD METAL

1. Product Identification

Synonyms: Granular lead, pigment metal; C.I. 77575
CAS No.: 7439-92-1
Molecular Weight: 207.19
Chemical Formula: Pb
Product Codes:
J.T. Baker: 2256, 2266
Mallinckrodt: 5668

2. Composition/Information on Ingredients

Ingredient	CAS No	Percent	Hazardous
Lead	7439-92-1	95 - 100%	Yes

3. Hazards Identification

Emergency Overview

POISON! DANGER! MAY BE FATAL IF SWALLOWED OR INHALED. CAUSES IRRITATION TO SKIN, EYES AND RESPIRATORY TRACT. NEUROTOXIN. AFFECTS THE GUM TISSUE, CENTRAL NERVOUS SYSTEM, KIDNEYS, BLOOD AND REPRODUCTIVE SYSTEM. POSSIBLE CANCER HAZARD. MAY CAUSE CANCER BASED ON ANIMAL DATA. Risk of cancer depends on duration and level of exposure.

J.T. Baker SAF-T-DATA(tm) Ratings (Provided here for your convenience)

Health Rating: 3 - Severe (Life)
Flammability Rating: 0 - None
Reactivity Rating: 0 - None
Contact Rating: 1 - Slight
Lab Protective Equip: GOGGLES; LAB COAT; PROPER GLOVES
Storage Color Code: Blue (Health)

Potential Health Effects

Inhalation:

Lead can be absorbed through the respiratory system. Local irritation of bronchia and lungs can occur and, in cases of acute exposure, symptoms such as metallic taste, chest and abdominal pain, and increased lead blood levels may follow. See also Ingestion.
Ingestion:
POISON! The symptoms of lead poisoning include abdominal pain and spasms, nausea, vomiting, headache. Acute poisoning can lead to muscle weakness, "lead line" on the gums, metallic taste, definite loss of appetite, insomnia, dizziness, high lead levels in blood and urine with shock, coma and death in extreme cases.
Skin Contact:
Lead and lead compounds may be absorbed through the skin on prolonged exposure; the symptoms of lead poisoning described for ingestion exposure may occur. Contact over short periods may cause local irritation, redness and pain.
Eye Contact:
Absorption can occur through eye tissues but the more common hazards are local irritation or abrasion.
Chronic Exposure:
Lead is a cumulative poison and exposure even to small amounts can raise the body's content to toxic levels. The symptoms of chronic exposure are like those of ingestion poisoning; restlessness, irritability, visual disturbances, hypertension and gray facial color may also be noted.
Aggravation of Pre-existing Conditions:
Persons with pre-existing kidney, nerve or circulatory disorders or with skin or eye problems may be more susceptible to the effects of this substance.

---

4. First Aid Measures

Inhalation:
Remove to fresh air. If not breathing, give artificial respiration. If breathing is difficult, give oxygen. Get medical attention.
Ingestion:
Induce vomiting immediately as directed by medical personnel. Never give anything by mouth to an unconscious person. Get medical attention.
Skin Contact:
Immediately flush skin with plenty of soap and water for at least 15 minutes. Remove contaminated clothing and shoes. Get medical attention. Wash clothing before reuse. Thoroughly clean shoes before reuse.
Eye Contact:
Immediately flush eyes with plenty of water for at least 15 minutes, lifting lower and upper eyelids occasionally. Get medical attention immediately.

---

5. Fire Fighting Measures

Fire:
Not considered to be a fire hazard. Powder/dust is flammable when heated or exposed to flame.
Explosion:
Not considered to be an explosion hazard.
Fire Extinguishing Media:
Use any means suitable for extinguishing surrounding fire. Do not allow water runoff to enter sewers or waterways.
Special Information:
In the event of a fire, wear full protective clothing and NIOSH-approved self-contained breathing apparatus with full facepiece operated in the pressure demand or other positive pressure mode. Can produce toxic lead fumes at elevated temperatures and also react with oxidizing materials.

---

6. Accidental Release Measures

Ventilate area of leak or spill. Wear appropriate personal protective equipment as specified in Section 8. Spills: Sweep up and containerize for reclamation or disposal. Vacuuming or wet sweeping may be used to avoid dust dispersal. US Regulations (CERCLA) require reporting spills and releases to soil, water and air in excess of reportable quantities. The toll free number for the US Coast Guard National Response Center is (800) 424-8802.

---

7. Handling and Storage

Keep in a tightly closed container, stored in a cool, dry, ventilated area. Protect against physical damage. Isolate from incompatible substances. Areas in which exposure to lead

metal or lead compounds may occur should be identified by signs or appropriate means, and access to the area should be limited to authorized persons. Containers of this material may be hazardous when empty since they retain product residues (dust, solids); observe all warnings and precautions listed for the product.

---

8. Exposure Controls/Personal Protection

Airborne Exposure Limits:
For lead, metal and inorganic dusts and fumes, as Pb:
-OSHA Permissible Exposure Limit (PEL): 0.05 mg/m3 (TWA)
For lead, elemental and inorganic compounds, as Pb:
-ACGIH Threshold Limit Value (TLV): 0.05 mg/m3 (TWA), A3 animal carcinogen
ACGIH Biological Exposure Indices (BEI): 30 ug/100ml, notation B (see actual Indices for more information).
For lead, inorganic:
-NIOSH Recommended Exposure Limit (REL): 0.1 mg/m3 (TWA)
Ventilation System:
A system of local and/or general exhaust is recommended to keep employee exposures below the Airborne Exposure Limits. Local exhaust ventilation is generally preferred because it can control the emissions of the contaminant at its source, preventing dispersion of it into the general work area. Please refer to the ACGIH document, *Industrial Ventilation, A Manual of Recommended Practices*, most recent edition, for details.
Personal Respirators (NIOSH Approved):
If the exposure limit is exceeded and engineering controls are not feasible, a half-face high efficiency particulate respirator (NIOSH type N100 filter) may be worn for up to ten times the exposure limit or the maximum use concentration specified by the appropriate regulatory agency or respirator supplier, whichever is lowest. A full-face piece high efficiency particulate respirator (NIOSH type N100 filter) may be worn up to 50 times the exposure limit, or the maximum use concentration specified by the appropriate regulatory agency or respirator supplier, whichever is lowest. If oil particles (e.g. lubricants, cutting fluids, glycerine, etc.) are present, use a NIOSH type R or P filter. For emergencies or instances where the exposure levels are not known, use a full-facepiece positive-pressure, air-supplied respirator. WARNING: Air-purifying respirators do not protect workers in oxygen-deficient atmospheres.
Skin Protection:
Wear impervious protective clothing, including boots, gloves, lab coat, apron or coveralls, as appropriate, to prevent skin contact.
Eye Protection:
Use chemical safety goggles and/or full face shield where dusting or splashing of solutions is possible. Maintain eye wash fountain and quick-drench facilities in work area.
Other Control Measures:
Eating, drinking, and smoking should not be permitted in areas where solids or liquids containing lead compounds are handled, processed, or stored. See OSHA substance-specific standard for more information on personal protective equipment, engineering and work practice controls, medical surveillance, record keeping, and reporting requirements. (29 CFR 1910.1025).

---

9. Physical and Chemical Properties

Appearance:
Small, white to blue-gray metallic shot or granules.
Odor:
Odorless.
Solubility:
Insoluble in water.
Density:
11.34
pH:
No information found.
% Volatiles by volume @ 21C (70F):
0
Boiling Point:
1740C (3164F)
Melting Point:
327.5C (622F)
Vapor Density (Air=1):
No information found.
Vapor Pressure (mm Hg):
1.77 @ 1000C (1832F)
Evaporation Rate (BuAc=1):
No information found.

---

10. Stability and Reactivity

Stability:
Stable under ordinary conditions of use and storage.
Hazardous Decomposition Products:
Does not decompose but toxic lead or lead oxide fumes may form at elevated temperatures.
Hazardous Polymerization:
Will not occur.
Incompatibilities:
Ammonium nitrate, chlorine trifluoride, hydrogen peroxide, sodium azide, zirconium, disodium acetylide, sodium acetylide and oxidants.
Conditions to Avoid:
Heat, flames, ignition sources and incompatibles.

---

11. Toxicological Information

Toxicological Data:
Investigated as a tumorigen, mutagen, reproductive effector.
Reproductive Toxicity:
Lead and other smelter emissions are human reproductive hazards. (Chemical Council on

Environmental Quality; Chemical Hazards to Human Reproduction, 1981).
Carcinogenicity:
EPA / IRIS classification: Group B2 - Probable human carcinogen, sufficient animal evidence.

```
--------\Cancer Lists\-------------------------------------------------------
                                      ---NTP Carcinogen---
Ingredient                            Known    Anticipated    IARC Category
-------------------------------------  -----    -----------    -------------
Lead (7439-92-1)                       No          No             2B
```

12. Ecological Information

Environmental Fate:
When released into the soil, this material is not expected to leach into groundwater. This material may bioaccumulate to some extent.
Environmental Toxicity:
No information found.

13. Disposal Considerations

Whatever cannot be saved for recovery or recycling should be managed in an appropriate and approved waste facility. Although not a listed RCRA hazardous waste, this material may exhibit one or more characteristics of a hazardous waste and require appropriate analysis to determine specific disposal requirements. Processing, use or contamination of this product may change the waste management options. State and local disposal regulations may differ from federal disposal regulations. Dispose of container and unused contents in accordance with federal, state and local requirements.

14. Transport Information

Not regulated.

15. Regulatory Information

```
--------\Chemical Inventory Status - Part 1\---------------------------------
Ingredient                                      TSCA  EC   Japan  Australia
----------------------------------------------  ----  ---  -----  ---------
Lead (7439-92-1)                                 Yes  Yes   Yes      Yes

--------\Chemical Inventory Status - Part 2\---------------------------------
                                                          --Canada--
```

```
Ingredient                                        Korea  DSL   NDSL  Phil.
-----------------------------------------------  -----  ---   ----  -----
Lead (7439-92-1)                                  Yes   Yes   No     Yes

--------\Federal, State & International Regulations - Part 1\----------------
                                          -SARA 302-    ------SARA 313------
Ingredient                                RQ    TPQ     List  Chemical Catg.
----------------------------------------  ---   -----   ----  --------------
Lead (7439-92-1)                          No    No      Yes        No

--------\Federal, State & International Regulations - Part 2\----------------
                                                         -RCRA-    -TSCA-
Ingredient                                CERCLA     261.33     8(d)
----------------------------------------  ------     ------    ------
Lead (7439-92-1)                          10         No         No


Chemical Weapons Convention:  No     TSCA 12(b):  No     CDTA:  No
SARA 311/312:  Acute: Yes      Chronic: Yes  Fire: No  Pressure: No
Reactivity: No          (Pure / Solid)
```

WARNING:
THIS PRODUCT CONTAINS CHEMICALS KNOWN TO THE STATE OF CALIFORNIA TO CAUSE CANCER AND BIRTH DEFECTS OR OTHER REPRODUCTIVE HARM.

Australian Hazchem Code: None allocated.
Poison Schedule: S6
WHMIS:
This MSDS has been prepared according to the hazard criteria of the Controlled Products Regulations (CPR) and the MSDS contains all of the information required by the CPR.

---

16. Other Information

NFPA Ratings: Health: **3** Flammability: **1** Reactivity: **0**
Label Hazard Warning:
POISON! DANGER! MAY BE FATAL IF SWALLOWED OR INHALED. CAUSES IRRITATION TO SKIN, EYES AND RESPIRATORY TRACT. NEUROTOXIN. AFFECTS THE GUM TISSUE, CENTRAL NERVOUS SYSTEM, KIDNEYS, BLOOD AND REPRODUCTIVE SYSTEM. POSSIBLE CANCER HAZARD. MAY CAUSE CANCER BASED ON ANIMAL DATA. Risk of cancer depends on duration and level of exposure.
Label Precautions:
Do not get in eyes, on skin, or on clothing.
Do not breathe dust.
Keep container closed.
Use only with adequate ventilation.
Wash thoroughly after handling.
Label First Aid:
If swallowed, induce vomiting immediately as directed by medical personnel. Never give anything by mouth to an unconscious person. If inhaled, remove to fresh air. If not

breathing, give artificial respiration. If breathing is difficult, give oxygen. In case of contact, immediately flush eyes or skin with plenty of water for at least 15 minutes. Remove contaminated clothing and shoes. Wash clothing before reuse. In all cases, get medical attention.

Product Use:
Laboratory Reagent.

Revision Information:
No Changes.

Disclaimer:
****

Mallinckrodt Baker, Inc. provides the information contained herein in good faith but makes no representation as to its comprehensiveness or accuracy. This document is intended only as a guide to the appropriate precautionary handling of the material by a properly trained person using this product. Individuals receiving the information must exercise their independent judgment in determining its appropriateness for a particular purpose. MALLINCKRODT BAKER, INC. MAKES NO REPRESENTATIONS OR WARRANTIES, EITHER EXPRESS OR IMPLIED, INCLUDING WITHOUT LIMITATION ANY WARRANTIES OF MERCHANTABILITY, FITNESS FOR A PARTICULAR PURPOSE WITH RESPECT TO THE INFORMATION SET FORTH HEREIN OR THE PRODUCT TO WHICH THE INFORMATION REFERS. ACCORDINGLY, MALLINCKRODT BAKER, INC. WILL NOT BE RESPONSIBLE FOR DAMAGES RESULTING FROM USE OF OR RELIANCE UPON THIS INFORMATION.
****

Prepared by: Environmental Health & Safety
Phone Number: (314) 654-1600 (U.S.A.)

MSDS Number: **M1599** * * * * * *Effective Date:* ***12/19/05*** * * * * * *Supercedes:* ***08/10/04***

MSDS **Material Safety Data Sheet**

From: **Mallinckrodt Baker, Inc.**
222 Red School Lane
Phillipsburg, NJ 08865

Mallinckrodt CHEMICALS J.T.Baker

24 Hour Emergency Telephone: 908-859-2151
CHEMTREC: 1-800-424-9300

National Response in Canada
CANUTEC: 613-996-6666

Outside U.S. and Canada
Chemtrec: 703-527-3887

NOTE: CHEMTREC, CANUTEC and National Response Center emergency numbers to be used only in the event of chemical emergencies involving a spill, leak, fire, exposure or accident involving chemicals.

All non-emergency questions should be directed to Customer Service (1-800-582-2537) for assistance.

MERCURY

1. Product Identification

Synonyms: Quicksilver; hydrargyrum; Liquid Silver
CAS No.: 7439-97-6
Molecular Weight: 200.59
Chemical Formula: Hg
Product Codes:
J.T. Baker: 2564, 2567, 2569
Mallinckrodt: 1278, 1280, 1288

2. Composition/Information on Ingredients

Ingredient	CAS No	Percent	Hazardous
Mercury	7439-97-6	90 - 100%	Yes

3. Hazards Identification

Emergency Overview

DANGER! CORROSIVE. CAUSES BURNS TO SKIN, EYES, AND RESPIRATORY TRACT. MAY BE FATAL IF SWALLOWED OR INHALED. HARMFUL IF ABSORBED THROUGH SKIN. AFFECTS THE KIDNEYS AND CENTRAL NERVOUS SYSTEM. MAY CAUSE ALLERGIC SKIN REACTION.

SAF-T-DATA(tm) Ratings (Provided here for your convenience)

Health Rating: 4 - Extreme (Life)
Flammability Rating: 0 - None
Reactivity Rating: 1 - Slight
Contact Rating: 3 - Severe (Corrosive)
Lab Protective Equip: GOGGLES & SHIELD; LAB COAT & APRON; VENT HOOD; PROPER GLOVES
Storage Color Code: White (Corrosive)

Potential Health Effects

Inhalation:
Mercury vapor is highly toxic via this route. Causes severe respiratory tract damage. Symptoms include sore throat, coughing, pain, tightness in chest, breathing difficulties, shortness of breath, headache, muscle weakness, anorexia, gastrointestinal disturbance, ringing in the ear, liver changes, fever, bronchitis and pneumonitis. Can be absorbed through inhalation with symptoms similar to ingestion.
Ingestion:
May cause burning of the mouth and pharynx, abdominal pain, vomiting, corrosive ulceration, bloody diarrhea. May be followed by a rapid and weak pulse, shallow breathing, paleness, exhaustion, tremors and collapse. Delayed death may occur from renal failure. Gastrointenstinal uptake of mercury is less than 5% but its ability to penetrate tissues presents some hazard. Initial symptoms may be thirst, possible abdominal discomfort.
Skin Contact:
Causes irritaton and burns to skin. Symptoms include redness and pain. May cause skin allergy and sensitization. Can be absorbed through the skin with symptoms to parallel ingestion.
Eye Contact:
Causes irritation and burns to eyes. Symptoms include redness, pain, blurred vision; may cause serious and permanent eye damage.
Chronic Exposure:
Chronic exposure through any route can produce central nervous system damage. May cause muscle tremors, personality and behavior changes, memory loss, metallic taste, loosening of the teeth, digestive disorders, skin rashes, brain damage and kidney damage. Can cause skin allergies and accumulate in the body. Repeated skin contact can cause the skin to turn gray in color. A suspected reproductive hazard; may damage the developing fetus and decrease fertility in males and females.
Aggravation of Pre-existing Conditions:
Persons with nervous disorders, or impaired kidney or respiratory function, or a history of allergies or a known sensitization to mercury may be more susceptible to the effects of the substance.

4. First Aid Measures

Inhalation:
Remove to fresh air. If not breathing, give artificial respiration. If breathing is difficult, give oxygen. Get medical attention immediately.
Ingestion:
Induce vomiting immediately as directed by medical personnel. Never give anything by mouth to an unconscious person. Get medical attention immediately.
Skin Contact:
Immediately flush skin with plenty of water for at least 15 minutes while removing contaminated clothing and shoes. Get medical attention immediately. Wash clothing before reuse. Thoroughly clean shoes before reuse.
Eye Contact:
Immediately flush eyes with plenty of water for at least 15 minutes, lifting lower and upper eyelids occasionally. Get medical attention immediately.

---

5. Fire Fighting Measures

Fire:
Not considered to be a fire hazard.
Explosion:
Not considered to be an explosion hazard.
Fire Extinguishing Media:
Use any means suitable for extinguishing surrounding fire. Do not allow water runoff to enter sewers or waterways.
Special Information:
In the event of a fire, wear full protective clothing and NIOSH-approved self-contained breathing apparatus with full facepiece operated in the pressure demand or other positive pressure mode. Undergoes hazardous reactions in the presence of heat and sparks or ignition. Smoke may contain toxic mercury or mercuric oxide. Smoke may contain toxic mercury or mercuric oxide.

---

6. Accidental Release Measures

Ventilate area of leak or spill. Clean-up personnel require protective clothing and respiratory protection from vapor.

Spills: Pick up and place in a suitable container for reclamation or disposal in a method that does not generate misting. Sprinkle area with sulfur or calcium polysulfide to suppress mercury. Do not flush to sewer. US Regulations (CERCLA) require reporting spills and releases to soil, water and air in excess of reportable quantities. The toll free number for the US Coast Guard National Response Center is (800) 424-8802.

J. T. Baker CINNASORB® and RESISORB® are recommended for spills of this product.

7. Handling and Storage

Keep in a tightly closed container, stored in a cool, dry, ventilated area. Protect against physical damage. Isolate from any source of heat or ignition. Do not use or store on porous work surfaces (wood, unsealed concrete, etc.). Follow strict hygiene practices. Containers of this material may be hazardous when empty since they retain product residues (vapors, liquid); observe all warnings and precautions listed for the product.

8. Exposure Controls/Personal Protection

Airborne Exposure Limits:
- OSHA Acceptable Ceiling Concentration:
mercury and mercury compounds: 0.1 mg/m3 (TWA), skin
- ACGIH Threshold Limit Value (TLV):
inorganic and metallic mercury, as Hg: 0.025 mg/m3 (TWA) skin, A4 Not classifiable as a human carcinogen.
- ACGIH Biological Exposure Indices:
total inorganic mercury in urine (preshift): 35 ug/g creatinine;
total inorganic mercury in blood (end of shift): 15 ug/l.

Ventilation System:
A system of local and/or general exhaust is recommended to keep employee exposures below the Airborne Exposure Limits. Local exhaust ventilation is generally preferred because it can control the emissions of the contaminant at its source, preventing dispersion of it into the general work area. Please refer to the ACGIH document, *Industrial Ventilation, A Manual of Recommended Practices*, most recent edition, for details.

Personal Respirators (NIOSH Approved):
If the exposure limit is exceeded and engineering controls are not feasible, a half-face respirator with a mercury vapor or chlorine gas cartridge may be worn for up to ten times the exposure limit or the maximum use concentration specified by the appropriate regulatory agency or respirator supplier, whichever is lowest. A full-face piece respirator with a mercury vapor or chlorine gas cartridge may be worn up to 50 times the exposure limit, or the maximum use concentraiton specified by the appropriate regulatory agency or respirator supplier, whichever is lowest. For emergencies or instances where the exposure levels are not known, use a full-face piece positive-pressure, air-supplied respirator.
WARNING: Air-purifying respirators do not protect workers in oxygen-deficient atmospheres.

Skin Protection:
Wear impervious protective clothing, including boots, gloves, lab coat, apron or coveralls, as appropriate, to prevent skin contact.

Eye Protection:
Use chemical safety goggles and/or a full face shield where splashing is possible. Maintain eye wash fountain and quick-drench facilities in work area.

9. Physical and Chemical Properties

Appearance:
Silver-white, heavy, mobile, liquid metal.
Odor:
Odorless.
Solubility:
Insoluble in water.
Density:
13.55
pH:
No information found.
% Volatiles by volume @ 21C (70F):
100
Boiling Point:
356.7C (675F)
Melting Point:
-38.87C (-38F)
Vapor Density (Air=1):
7.0
Vapor Pressure (mm Hg):
0.0018 @ 25C (77F)
Evaporation Rate (BuAc=1):
4

---

10. Stability and Reactivity

Stability:
Stable under ordinary conditions of use and storage.
Hazardous Decomposition Products:
At high temperatures, vaporizes to form extremely toxic fumes.
Hazardous Polymerization:
Will not occur.
Incompatibilities:
Acetylenes, ammonia, ethylene oxide, chlorine dioxide, azides, metal oxides, methyl silane, lithium, rubidium, oxygen, strong oxidants, metal carbonyls.
Conditions to Avoid:
Heat, flames, ignition sources, metal surfaces and incompatibles.

---

11. Toxicological Information

Toxicological Data:
Investigated as a tumorigen, mutagen, reproductive effector.
Reproductive Toxicity:
All forms of mercury can cross the placenta to the fetus, but most of what is known has

been learned from experimental animals. See Chronic Health Hazards.
Carcinogenicity:
EPA / IRIS classification: Group D1 - Not classifiable as a human carcinogen.

```
--------\Cancer Lists\-----------------------------------------------------
                                        ---NTP Carcinogen---
Ingredient                              Known    Anticipated    IARC Category
------------------------------------    -----    -----------    -------------
Mercury (7439-97-6)                      No          No              3
```

12. Ecological Information

Environmental Fate:
This material has an experimentally-determined bioconcentration factor (BCF) of greater than 100. This material is expected to significantly bioaccumulate.
Environmental Toxicity:
This material is expected to be toxic to aquatic life. The LC50/96-hour values for fish are less than 1 mg/l.

13. Disposal Considerations

Whatever cannot be saved for recovery or recycling should be handled as hazardous waste and sent to a RCRA approved waste facility. Processing, use or contamination of this product may change the waste management options. State and local disposal regulations may differ from federal disposal regulations. Dispose of container and unused contents in accordance with federal, state and local requirements.

14. Transport Information

Domestic (Land, D.O.T.)

Proper Shipping Name: RQ, MERCURY
Hazard Class: 8
UN/NA: UN2809
Packing Group: III
Information reported for product/size: 1LB

International (Water, I.M.O.)

Proper Shipping Name: MERCURY
Hazard Class: 8
UN/NA: UN2809
Packing Group: III
Information reported for product/size: 1LB

International (Air, I.C.A.O.)

Proper Shipping Name: MERCURY
Hazard Class: 8
UN/NA: UN2809
Packing Group: III
Information reported for product/size: 1LB

---

15. Regulatory Information

```
--------\Chemical Inventory Status - Part 1\---------------------------------
Ingredient                                        TSCA  EC   Japan  Australia
----------------------------------------------  ----  ---  -----  ---------
Mercury (7439-97-6)                              Yes  Yes   No       Yes

--------\Chemical Inventory Status - Part 2\---------------------------------
                                                         --Canada--
Ingredient                                        Korea  DSL   NDSL  Phil.
----------------------------------------------  -----  ---   ----  -----
Mercury (7439-97-6)                              Yes   Yes   No     Yes

--------\Federal, State & International Regulations - Part 1\----------------
                                            -SARA 302-    ------SARA 313------
Ingredient                                  RQ    TPQ     List  Chemical Catg.
----------------------------------------  ---   -----   ----  --------------
Mercury (7439-97-6)                       No    No      Yes        No

--------\Federal, State & International Regulations - Part 2\----------------
                                                         -RCRA-    -TSCA-
Ingredient                                  CERCLA     261.33     8(d)
----------------------------------------  ------     ------    ------
Mercury (7439-97-6)                       1          U151       No


Chemical Weapons Convention:  No     TSCA 12(b):  No     CDTA:  No
SARA 311/312:  Acute: Yes      Chronic: Yes  Fire: No  Pressure: No
Reactivity: No          (Pure / Liquid)
```

WARNING:
THIS PRODUCT CONTAINS A CHEMICAL(S) KNOWN TO THE STATE OF CALIFORNIA TO CAUSE BIRTH DEFECTS OR OTHER REPRODUCTIVE HARM.

Australian Hazchem Code: 2Z
Poison Schedule: S7
WHMIS:
This MSDS has been prepared according to the hazard criteria of the Controlled Products Regulations (CPR) and the MSDS contains all of the information required by the CPR.

---

16. Other Information

NFPA Ratings: Health: **3** Flammability: **0** Reactivity: **0**
Label Hazard Warning:
DANGER! CORROSIVE. CAUSES BURNS TO SKIN, EYES, AND RESPIRATORY TRACT. MAY BE FATAL IF SWALLOWED OR INHALED. HARMFUL IF ABSORBED THROUGH SKIN. AFFECTS THE KIDNEYS AND CENTRAL NERVOUS SYSTEM. MAY CAUSE ALLERGIC SKIN REACTION.
Label Precautions:
Do not get in eyes, on skin, or on clothing.
Do not breathe vapor.
Keep container closed.
Use only with adequate ventilation.
Wash thoroughly after handling.
Label First Aid:
If swallowed, induce vomiting immediately as directed by medical personnel. Never give anything by mouth to an unconscious person. If inhaled, remove to fresh air. If not breathing, give artificial respiration. If breathing is difficult, give oxygen. In case of contact, immediately flush eyes or skin with plenty of water for at least 15 minutes while removing contaminated clothing and shoes. Wash clothing before reuse. In all cases get medical attention immediately.
Product Use:
Laboratory Reagent.
Revision Information:
MSDS Section(s) changed since last revision of document include: 3.
Disclaimer:
****

Mallinckrodt Baker, Inc. provides the information contained herein in good faith but makes no representation as to its comprehensiveness or accuracy. This document is intended only as a guide to the appropriate precautionary handling of the material by a properly trained person using this product. Individuals receiving the information must exercise their independent judgment in determining its appropriateness for a particular purpose. MALLINCKRODT BAKER, INC. MAKES NO REPRESENTATIONS OR WARRANTIES, EITHER EXPRESS OR IMPLIED, INCLUDING WITHOUT LIMITATION ANY WARRANTIES OF MERCHANTABILITY, FITNESS FOR A PARTICULAR PURPOSE WITH RESPECT TO THE INFORMATION SET FORTH HEREIN OR THE PRODUCT TO WHICH THE INFORMATION REFERS. ACCORDINGLY, MALLINCKRODT BAKER, INC. WILL NOT BE RESPONSIBLE FOR DAMAGES RESULTING FROM USE OF OR RELIANCE UPON THIS INFORMATION.
****

Prepared by: Environmental Health & Safety
Phone Number: (314) 654-1600 (U.S.A.)

Material Safety Data Sheet

Phenanthrene, 90%

ACC# 59921

Section 1 - Chemical Product and Company Identification

MSDS Name: Phenanthrene, 90%
Catalog Numbers: AC130100000, AC130100010, AC130102500
Synonyms:
Company Identification:
Acros Organics N.V.
One Reagent Lane
Fair Lawn, NJ 07410
For information in North America, call: 800-ACROS-01
For emergencies in the US, call CHEMTREC: 800-424-9300

Section 2 - Composition, Information on Ingredients

CAS#	Chemical Name	Percent	EINECS/ELINCS
85-01-8	Phenanthrene	90.0	201-581-5

Section 3 - Hazards Identification

EMERGENCY OVERVIEW

Appearance: brown solid.
Caution! Powdered material may form explosive dust-air mixtures. May cause allergic skin reaction. May cause eye and skin irritation. May cause respiratory tract irritation. Cancer suspect agent.
Target Organs: None.

Potential Health Effects

Eye: May cause eye irritation.
Skin: May cause skin irritation. May cause photosensitive skin reactions in certain individuals.
Ingestion: May cause irritation of the digestive tract.
Inhalation: Inhalation of dust may cause respiratory tract irritation.
Chronic: No information found.

Section 4 - First Aid Measures

Eyes: Immediately flush eyes with plenty of water for at least 15 minutes, occasionally lifting the upper and lower eyelids. Get medical aid imme diately.
Skin: Get medical aid. Flush skin with plenty of water for at least 15 minutes while removing contaminated clothing and shoes.
Ingestion: If victim is conscious and alert, give 2-4 cupfuls of milk or water. Never give anything by mouth to an unconscious person. Get medical aid immediately.

Inhalation: Remove from exposure and move to fresh air immediately. If not breathing, give artificial respiration. If breathing is difficult, give oxygen. Get medical aid.
Notes to Physician: Treat symptomatically.

Section 5 - Fire Fighting Measures

General Information: As in any fire, wear a self-contained breathing apparatus in pressure-demand, MSHA/NIOSH (approved or equivalent), and full protective gear. Dusts at sufficient concentrations can form explosive mixtures with air. During a fire, irritating and highly toxic gases may be generated by thermal decomposition or combustion.
Extinguishing Media: Use water spray or dry chemical.
Flash Point: Not available.
Autoignition Temperature: Not available.
Explosion Limits, Lower: Not available.
Upper: Not available.
NFPA Rating: (estimated) Health: 1; Flammability: 1; Instability: 0

Section 6 - Accidental Release Measures

General Information: Use proper personal protective equipment as indicated in Section 8.
Spills/Leaks: Clean up spills immediately, observing precautions in the Protective Equipment section. Sweep up, then place into a suitable container for disposal. Avoid generating dusty conditions. Provide ventilation. Do not let this chemical enter the environment.

Section 7 - Handling and Storage

Handling: Wash thoroughly after handling. Remove contaminated clothing and wash before reuse. Minimize dust generation and accumulation. Avoid contact with eyes, skin, and clothing. Keep container tightly closed. Avoid ingestion and inhalation.
Storage: Keep container closed when not in use. Store in a tightly closed container. Store in a cool, dry, well-ventilated area away from incompatible substances.

Section 8 - Exposure Controls, Personal Protection

Engineering Controls: Use adequate ventilation to keep airborne concentrations low.
Exposure Limits

Chemical Name	ACGIH	NIOSH	OSHA - Final PELs
Phenanthrene	0.2 mg/m3 TWA (as benzene soluble aerosol) (listed under Coal tar pitches).	0.1 mg/m3 TWA (cyclohexane-extractable fraction) (listed under Coal tar pitches).80 mg/m3 IDLH (listed under Coal tar pitches).	0.2 mg/m3 TWA (as benzene soluble fraction) (listed under Coal tar pitches).

OSHA Vacated PELs: Phenanthrene: No OSHA Vacated PELs are listed for this chemical.

Personal Protective Equipment
Eyes: Wear appropriate protective eyeglasses or chemical safety goggles as described by OSHA's eye and face protection regulations in 29 CFR 1910.133 or European Standard EN166.
Skin: Wear appropriate protective gloves to prevent skin exposure.
Clothing: Wear appropriate protective clothing to prevent skin exposure.
Respirators: Follow the OSHA respirator regulations found in 29 CFR 1910.134 or European Standard EN 149. Use a NIOSH/MSHA or European Standard EN 149 approved respirator if exposure limits are exceeded or if irritation or other symptoms are experienced.

Section 9 - Physical and Chemical Properties

Physical State: Solid
Appearance: brown
Odor: none reported
pH: Not available.
Vapor Pressure: 1 mm Hg @116c
Vapor Density: Not available.
Evaporation Rate: Not available.
Viscosity: Not available.
Boiling Point: 340 deg C
Freezing/Melting Point:101 deg C
Decomposition Temperature: Not available.
Solubility: insoluble
Specific Gravity/Density:1.0630g/cm3
Molecular Formula:C14H10
Molecular Weight:178.23

Section 10 - Stability and Reactivity

Chemical Stability: Stable under normal temperatures and pressures.
Conditions to Avoid: Incompatible materials, dust generation, strong oxidants.
Incompatibilities with Other Materials: Strong oxidizing agents.
Hazardous Decomposition Products: Carbon monoxide, carbon dioxide.
Hazardous Polymerization: Has not been reported.

Section 11 - Toxicological Information

RTECS#:
CAS# 85-01-8: SF7175000
LD50/LC50:
CAS# 85-01-8:
Oral, mouse: LD50 = 700 mg/kg;
Oral, rat: LD50 = 1.8 gm/kg;
.

Carcinogenicity:
CAS# 85-01-8:

- **ACGIH:** A1 - Confirmed Human Carcinogen (as benzene soluble aerosol) (listed as 'Coal tar pitches').
- **California:** Not listed.
- **NTP:** Known carcinogen (listed as Coal tar pitches).
- **IARC:** Group 1 carcinogen (listed as Coal tar pitches).

Epidemiology: No data available.
Teratogenicity: No data available.
Reproductive Effects: No data available.
Mutagenicity: No data available.
Neurotoxicity: No data available.
Other Studies:

Section 12 - Ecological Information

No information available.

Section 13 - Disposal Considerations

Chemical waste generators must determine whether a discarded chemical is classified as a hazardous waste. US EPA guidelines for the classification determination are listed in 40 CFR Parts 261.3. Additionally, waste generators must consult state and local hazardous waste regulations to ensure complete and accurate classification.
RCRA P-Series: None listed.
RCRA U-Series: None listed.

Section 14 - Transport Information

	US DOT	Canada TDG
Shipping Name:	Not regulated as a hazardous material	No information available.
Hazard Class:		
UN Number:		
Packing Group:		

Section 15 - Regulatory Information

US FEDERAL

TSCA
CAS# 85-01-8 is listed on the TSCA inventory.
Health & Safety Reporting List
None of the chemicals are on the Health & Safety Reporting List.
Chemical Test Rules
None of the chemicals in this product are under a Chemical Test Rule.
Section 12b
None of the chemicals are listed under TSCA Section 12b.

TSCA Significant New Use Rule
None of the chemicals in this material have a SNUR under TSCA.
CERCLA Hazardous Substances and corresponding RQs
CAS# 85-01-8: 5000 lb final RQ; 2270 kg final RQ
SARA Section 302 Extremely Hazardous Substances
None of the chemicals in this product have a TPQ.
SARA Codes
CAS # 85-01-8: immediate.
Section 313
This material contains Phenanthrene (CAS# 85-01-8, 90.0%),which is subject to the reporting requirements of Section 313 of SARA Title III and 40 CFR Part 373.
Clean Air Act:
This material does not contain any hazardous air pollutants.
This material does not contain any Class 1 Ozone depletors.
This material does not contain any Class 2 Ozone depletors.
Clean Water Act:
None of the chemicals in this product are listed as Hazardous Substances under the CWA.
CAS# 85-01-8 is listed as a Priority Pollutant under the Clean Water Act.
None of the chemicals in this product are listed as Toxic Pollutants under the CWA.
OSHA:
None of the chemicals in this product are considered highly hazardous by OSHA.
STATE
CAS# 85-01-8 can be found on the following state right to know lists: California, New Jersey, Pennsylvania, Minnesota, (listed as Coal tar pitches), Massachusetts.

California Prop 65

California No Significant Risk Level: None of the chemicals in this product are listed.

European / International Regulations

European Labeling in Accordance with EC Directives
Hazard Symbols:
T
Risk Phrases:
R 45 May cause cancer.

Safety Phrases:
S 24/25 Avoid contact with skin and eyes.

WGK (Water Danger/Protection)
CAS# 85-01-8: No information available.
Canada - DSL/NDSL
CAS# 85-01-8 is listed on Canada's DSL List.
Canada - WHMIS
This product has a WHMIS classification of D2B.
This product has been classified in accordance with the hazard criteria of the Controlled Products Regulations and the MSDS contains all of the information required by those regulations.
Canadian Ingredient Disclosure List
CAS# 85-01-8 is listed on the Canadian Ingredient Disclosure List.

Section 16 - Additional Information

MSDS Creation Date: 7/14/1998
Revision #3 Date: 10/03/2005

The information above is believed to be accurate and represents the best information currently available to us. However, we make no warranty of merchantability or any other warranty, express or implied, with respect to such information, and we assume no liability resulting from its use. Users should make their own investigations to determine the suitability of the information for their particular purposes. In no event shall Fisher be liable for any claims, losses, or damages of any third party or for lost profits or any special, indirect, incidental, consequential or exemplary damages, howsoever arising, even if Fisher has been advised of the possibility of such damages.

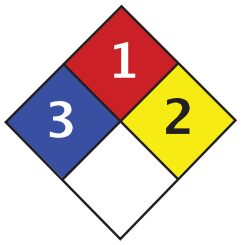

Health	3
Fire	1
Reactivity	2
Personal Protection	E

Material Safety Data Sheet
Arsenic MSDS

Section 1: Chemical Product and Company Identification

Product Name: Arsenic

Catalog Codes: SLA1006

CAS#: 7440-38-2

RTECS: CG0525000

TSCA: TSCA 8(b) inventory: Arsenic

CI#: Not applicable.

Synonym:

Chemical Name: Arsenic

Chemical Formula: As

Contact Information:

Sciencelab.com, Inc.
14025 Smith Rd.
Houston, Texas 77396

US Sales: **1-800-901-7247**
International Sales: **1-281-441-4400**

Order Online: ScienceLab.com

CHEMTREC (24HR Emergency Telephone), call:
1-800-424-9300

International CHEMTREC, call: 1-703-527-3887

For non-emergency assistance, call: 1-281-441-4400

Section 2: Composition and Information on Ingredients

Composition:

Name	CAS #	% by Weight
Arsenic	7440-38-2	100

Toxicological Data on Ingredients: Arsenic: ORAL (LD50): Acute: 763 mg/kg [Rat]. 145 mg/kg [Mouse].

Section 3: Hazards Identification

Potential Acute Health Effects:
Very hazardous in case of ingestion, of inhalation. Slightly hazardous in case of skin contact (irritant), of eye contact (irritant).

Potential Chronic Health Effects:
CARCINOGENIC EFFECTS: Classified A1 (Confirmed for human.) by ACGIH.
MUTAGENIC EFFECTS: Not available.
TERATOGENIC EFFECTS: Not available.
DEVELOPMENTAL TOXICITY: Not available.
The substance is toxic to kidneys, lungs, the nervous system, mucous membranes.
Repeated or prolonged exposure to the substance can produce target organs damage.

Section 4: First Aid Measures

Eye Contact:
Check for and remove any contact lenses. In case of contact, immediately flush eyes with plenty of water for at least 15 minutes. Get medical attention if irritation occurs.

Skin Contact: Wash with soap and water. Cover the irritated skin with an emollient. Get medical attention if irritation develops.

Serious Skin Contact: Not available.

Inhalation:
If inhaled, remove to fresh air. If not breathing, give artificial respiration. If breathing is difficult, give oxygen. Get medical attention.

Serious Inhalation:
Evacuate the victim to a safe area as soon as possible. Loosen tight clothing such as a collar, tie, belt or waistband. If breathing is difficult, administer oxygen. If the victim is not breathing, perform mouth-to-mouth resuscitation. Seek medical attention.

Ingestion:
Do NOT induce vomiting unless directed to do so by medical personnel. Never give anything by mouth to an unconscious person. If large quantities of this material are swallowed, call a physician immediately. Loosen tight clothing such as a collar, tie, belt or waistband.

Serious Ingestion: Not available.

Section 5: Fire and Explosion Data

Flammability of the Product: May be combustible at high temperature.

Auto-Ignition Temperature: Not available.

Flash Points: Not available.

Flammable Limits: Not available.

Products of Combustion: Some metallic oxides.

Fire Hazards in Presence of Various Substances: Flammable in presence of open flames and sparks, of heat, of oxidizing materials.

Explosion Hazards in Presence of Various Substances:
Risks of explosion of the product in presence of mechanical impact: Not available.
Risks of explosion of the product in presence of static discharge: Not available.

Fire Fighting Media and Instructions:
SMALL FIRE: Use DRY chemical powder.
LARGE FIRE: Use water spray, fog or foam. Do not use water jet.

Special Remarks on Fire Hazards:
Material in powder form, capable of creating a dust explosion. When heated to decomposition it emits highly toxic fumes.

Special Remarks on Explosion Hazards: Not available.

Section 6: Accidental Release Measures

Small Spill: Use appropriate tools to put the spilled solid in a convenient waste disposal container.

Large Spill:
Use a shovel to put the material into a convenient waste disposal container. Be careful that the product is not

present at a concentration level above TLV. Check TLV on the MSDS and with local authorities.

Section 7: Handling and Storage

Precautions:
Keep locked up.. Keep away from heat. Keep away from sources of ignition. Empty containers pose a fire risk, evaporate the residue under a fume hood. Ground all equipment containing material. Do not ingest. Do not breathe dust. Wear suitable protective clothing. In case of insufficient ventilation, wear suitable respiratory equipment. If ingested, seek medical advice immediately and show the container or the label. Keep away from incompatibles such as oxidizing agents, acids, moisture.

Storage: Keep container tightly closed. Keep container in a cool, well-ventilated area.

Section 8: Exposure Controls/Personal Protection

Engineering Controls:
Use process enclosures, local exhaust ventilation, or other engineering controls to keep airborne levels below recommended exposure limits. If user operations generate dust, fume or mist, use ventilation to keep exposure to airborne contaminants below the exposure limit.

Personal Protection: Safety glasses. Lab coat. Dust respirator. Be sure to use an approved/certified respirator or equivalent. Gloves.

Personal Protection in Case of a Large Spill:
Splash goggles. Full suit. Dust respirator. Boots. Gloves. A self contained breathing apparatus should be used to avoid inhalation of the product. Suggested protective clothing might not be sufficient; consult a specialist BEFORE handling this product.

Exposure Limits:
TWA: 0.01 from ACGIH (TLV) [United States] [1995]
Consult local authorities for acceptable exposure limits.

Section 9: Physical and Chemical Properties

Physical state and appearance: Solid. (Lustrous solid.)

Odor: Not available.

Taste: Not available.

Molecular Weight: 74.92 g/mole

Color: Silvery.

pH (1% soln/water): Not applicable.

Boiling Point: Not available.

Melting Point: Sublimation temperature: 615°C (1139°F)

Critical Temperature: Not available.

Specific Gravity: 5.72 (Water = 1)

Vapor Pressure: Not applicable.

Vapor Density: Not available.

Volatility: Not available.

Odor Threshold: Not available.

Water/Oil Dist. Coeff.: Not available.

Ionicity (in Water): Not available.

Dispersion Properties: Not available.

Solubility: Insoluble in cold water, hot water.

Section 10: Stability and Reactivity Data

Stability: The product is stable.

Instability Temperature: Not available.

Conditions of Instability: Not available.

Incompatibility with various substances: Reactive with oxidizing agents, acids, moisture.

Corrosivity: Non-corrosive in presence of glass.

Special Remarks on Reactivity: Not available.

Special Remarks on Corrosivity: Not available.

Polymerization: Will not occur.

Section 11: Toxicological Information

Routes of Entry: Inhalation. Ingestion.

Toxicity to Animals: Acute oral toxicity (LD50): 145 mg/kg [Mouse].

Chronic Effects on Humans:
CARCINOGENIC EFFECTS: Classified A1 (Confirmed for human.) by ACGIH.
Causes damage to the following organs: kidneys, lungs, the nervous system, mucous membranes.

Other Toxic Effects on Humans:
Very hazardous in case of ingestion, of inhalation.
Slightly hazardous in case of skin contact (irritant).

Special Remarks on Toxicity to Animals: Not available.

Special Remarks on Chronic Effects on Humans: Not available.

Special Remarks on other Toxic Effects on Humans: Not available.

Section 12: Ecological Information

Ecotoxicity: Not available.

BOD5 and COD: Not available.

Products of Biodegradation:
Possibly hazardous short term degradation products are not likely. However, long term degradation products may arise.

Toxicity of the Products of Biodegradation: The products of degradation are as toxic as the original product.

Special Remarks on the Products of Biodegradation: Not available.

Section 13: Disposal Considerations

Waste Disposal:

Section 14: Transport Information

DOT Classification: CLASS 6.1: Poisonous material.

Identification: : Arsenic UNNA: UN1558 PG: II

Special Provisions for Transport: Not available.

Section 15: Other Regulatory Information

Federal and State Regulations:
California prop. 65: This product contains the following ingredients for which the State of California has found to cause cancer, birth defects or other reproductive harm, which would require a warning under the statute: Arsenic
California prop. 65: This product contains the following ingredients for which the State of California has found to cause cancer which would require a warning under the statute: Arsenic
Pennsylvania RTK: Arsenic
Massachusetts RTK: Arsenic
TSCA 8(b) inventory: Arsenic

Other Regulations: OSHA: Hazardous by definition of Hazard Communication Standard (29 CFR 1910.1200).

Other Classifications:

WHMIS (Canada):
CLASS D-1A: Material causing immediate and serious toxic effects (VERY TOXIC).
CLASS D-2A: Material causing other toxic effects (VERY TOXIC).

DSCL (EEC):
R22- Harmful if swallowed.
R45- May cause cancer.

HMIS (U.S.A.):

Health Hazard: 3

Fire Hazard: 1

Reactivity: 2

Personal Protection: E

National Fire Protection Association (U.S.A.):

Health: 3

Flammability: 1

Reactivity: 2

Specific hazard:

Protective Equipment:
Gloves.
Lab coat.
Dust respirator. Be sure to use an approved/certified respirator or equivalent. Wear appropriate respirator when ventilation is inadequate.
Safety glasses.

Section 16: Other Information

References:
-Hawley, G.G.. The Condensed Chemical Dictionary, 11e ed., New York N.Y., Van Nostrand Reinold, 1987.
-Liste des produits purs tératogènes, mutagènes, cancérogènes. Répertoire toxicologique de la Commission de la Santé et de la Sécurité du Travail du Québec.
-Material safety data sheet emitted by: la Commission de la Santé et de la Sécurité du Travail du Québec.
-SAX, N.I. Dangerous Properties of Indutrial Materials. Toronto, Van Nostrand Reinold, 6e ed. 1984.
-The Sigma-Aldrich Library of Chemical Safety Data, Edition II.
-Guide de la loi et du règlement sur le transport des marchandises dangeureuses au canada. Centre de conformité internatinal Ltée. 1986.

Other Special Considerations: Not available.

Created: 10/09/2005 04:16 PM

Last Updated: 10/09/2005 04:16 PM

The information above is believed to be accurate and represents the best information currently available to us. However, we make no warranty of merchantability or any other warranty, express or implied, with respect to such information, and we assume no liability resulting from its use. Users should make their own investigations to determine the suitability of the information for their particular purposes. In no event shall ScienceLab.com be liable for any claims, losses, or damages of any third party or for lost profits or any special, indirect, incidental, consequential or exemplary damages, howsoever arising, even if ScienceLab.com has been advised of the possibility of such damages.

Health	2
Fire	0
Reactivity	0
Personal Protection	E

Material Safety Data Sheet
Nickel metal MSDS

Section 1: Chemical Product and Company Identification

Product Name: Nickel metal

Catalog Codes: SLN2296, SLN1342, SLN1954

CAS#: 7440-02-0

RTECS: QR5950000

TSCA: TSCA 8(b) inventory: Nickel metal

CI#: Not applicable.

Synonym: Nickel Metal shot; Nickel metal foil.

Chemical Name: Nickel

Chemical Formula: Ni

Contact Information:

Sciencelab.com, Inc.
14025 Smith Rd.
Houston, Texas 77396

US Sales: **1-800-901-7247**
International Sales: **1-281-441-4400**

Order Online: ScienceLab.com

CHEMTREC (24HR Emergency Telephone), call:
1-800-424-9300

International CHEMTREC, call: 1-703-527-3887

For non-emergency assistance, call: 1-281-441-4400

Section 2: Composition and Information on Ingredients

Composition:

Name	CAS #	% by Weight
Nickel metal	7440-02-0	100

Toxicological Data on Ingredients: Nickel metal LD50: Not available. LC50: Not available.

Section 3: Hazards Identification

Potential Acute Health Effects:
Hazardous in case of inhalation. Slightly hazardous in case of skin contact (irritant, sensitizer), of eye contact (irritant), of ingestion.

Potential Chronic Health Effects:
Slightly hazardous in case of skin contact (sensitizer), of ingestion, of inhalation (lung sensitizer).
CARCINOGENIC EFFECTS: Classified 2B (Possible for human.) by IARC. Classified 2 (Some evidence.) by NTP.
MUTAGENIC EFFECTS: Not available.
TERATOGENIC EFFECTS: Not available.
DEVELOPMENTAL TOXICITY: Not available.
The substance is toxic to skin.
The substance may be toxic to kidneys, lungs, liver, upper respiratory tract.
Repeated or prolonged exposure to the substance can produce target organs damage.

Section 4: First Aid Measures

Eye Contact:
Check for and remove any contact lenses. In case of contact, immediately flush eyes with plenty of water for at least 15 minutes. Get medical attention if irritation occurs.

Skin Contact:
In case of contact, immediately flush skin with plenty of water for at least 15 minutes while removing contaminated clothing and shoes. Cover the irritated skin with an emollient. Wash clothing before reuse. Thoroughly clean shoes before reuse. Get medical attention.

Serious Skin Contact: Not available.

Inhalation:
If inhaled, remove to fresh air. If not breathing, give artificial respiration. If breathing is difficult, give oxygen. Get medical attention.

Serious Inhalation: Not available.

Ingestion:
Do NOT induce vomiting unless directed to do so by medical personnel. Never give anything by mouth to an unconscious person. If large quantities of this material are swallowed, call a physician immediately. Loosen tight clothing such as a collar, tie, belt or waistband.

Serious Ingestion: Not available.

Section 5: Fire and Explosion Data

Flammability of the Product: Non-flammable.

Auto-Ignition Temperature: Not applicable.

Flash Points: Not applicable.

Flammable Limits: Not applicable.

Products of Combustion: Not available.

Fire Hazards in Presence of Various Substances: Not applicable.

Explosion Hazards in Presence of Various Substances:
Risks of explosion of the product in presence of mechanical impact: Not available.
Risks of explosion of the product in presence of static discharge: Not available.

Fire Fighting Media and Instructions:
Flammable solid.
SMALL FIRE: Use DRY chemical powder.
LARGE FIRE: Use water spray or fog. Cool containing vessels with water jet in order to prevent pressure build-up, autoignition or explosion.

Special Remarks on Fire Hazards: Material in powder form, capable of creating a dust explosion. This material is flammable in powder form only.

Special Remarks on Explosion Hazards:
Material in powder form, capable of creating a dust explosion.
Mixtures containing Potassium Perchlorate with Nickel & Titanium powders & infusorial earth can explode.
Adding 2 or 3 drops of approximately 90% peroxyformic acid to powdered nickel will result in explosion.
Powdered nickel reacts explosively upon contact with fused ammonium nitrate at temperatures below 200 deg. C.

Section 6: Accidental Release Measures

Small Spill:
Use appropriate tools to put the spilled solid in a convenient waste disposal container. Finish cleaning by spreading water on the contaminated surface and dispose of according to local and regional authority requirements.

Large Spill:
Use a shovel to put the material into a convenient waste disposal container. Finish cleaning by spreading water on the contaminated surface and allow to evacuate through the sanitary system. Be careful that the product is not present at a concentration level above TLV. Check TLV on the MSDS and with local authorities.

Section 7: Handling and Storage

Precautions:
Keep locked up.. Do not breathe dust. Wear suitable protective clothing. In case of insufficient ventilation, wear suitable respiratory equipment. If you feel unwell, seek medical attention and show the label when possible. Keep away from incompatibles such as oxidizing agents, combustible materials, metals, acids.

Storage: Keep container tightly closed. Keep container in a cool, well-ventilated area.

Section 8: Exposure Controls/Personal Protection

Engineering Controls:
Use process enclosures, local exhaust ventilation, or other engineering controls to keep airborne levels below recommended exposure limits. If user operations generate dust, fume or mist, use ventilation to keep exposure to airborne contaminants below the exposure limit.

Personal Protection: Safety glasses. Lab coat. Dust respirator. Be sure to use an approved/certified respirator or equivalent. Gloves.

Personal Protection in Case of a Large Spill:
Splash goggles. Full suit. Dust respirator. Boots. Gloves. A self contained breathing apparatus should be used to avoid inhalation of the product. Suggested protective clothing might not be sufficient; consult a specialist BEFORE handling this product.

Exposure Limits:
TWA: 1 (mg/m3) from ACGIH (TLV) [United States] Inhalation Respirable.
TWA: 0.5 (mg/m3) [United Kingdom (UK)]
TWA: 1 (mg/m3) from OSHA (PEL) [United States] InhalationConsult local authorities for acceptable exposure limits.

Section 9: Physical and Chemical Properties

Physical state and appearance: Solid. (Metal solid. Lustrous solid.)

Odor: Odorless.

Taste: Not available.

Molecular Weight: 58.71 g/mole

Color: Silvery.

pH (1% soln/water): Not applicable.

Boiling Point: 2730°C (4946°F)

Melting Point: 1455°C (2651°F)

Critical Temperature: Not available.

Specific Gravity: Density: 8.908 (Water = 1)

Vapor Pressure: Not applicable.

Vapor Density: Not available.

Volatility: Not available.

Odor Threshold: Not available.

Water/Oil Dist. Coeff.: Not available.

Ionicity (in Water): Not available.

Dispersion Properties: Not available.

Solubility:
Insoluble in cold water, hot water.
Insoluble in Ammonia.
Soluble in dilute Nitric Acid.
Slightly soluble in Hydrochloric Acid, Sulfuric Acid.

Section 10: Stability and Reactivity Data

Stability: The product is stable.

Instability Temperature: Not available.

Conditions of Instability: Incompatible materials

Incompatibility with various substances: Reactive with oxidizing agents, combustible materials, metals, acids.

Corrosivity: Non-corrosive in presence of glass.

Special Remarks on Reactivity:
Incompatible with strong acids, selenium, sulfur, wood and other combustibles, nickel nitrate, aluminum, aluminum trichloride, ethylene, p-dioxan, hydrogen, methanol, non-metals, oxidants, sulfur compounds, aniline, hydrogen sulfide, flammable solvents, hydrazine, and metal powders (especially zinc, aluminum, and magnesium), ammonium nitrate, nitryl fluoride, bromine pentafluoride, potassium perchlorate + titanium powder + indusorial earth.

Special Remarks on Corrosivity: Not available.

Polymerization: Will not occur.

Section 11: Toxicological Information

Routes of Entry: Inhalation. Ingestion.

Toxicity to Animals:
LD50: Not available.
LC50: Not available.

Chronic Effects on Humans:
CARCINOGENIC EFFECTS: Classified 2B (Possible for human.) by IARC. Classified 2 (Some evidence.) by NTP.
Causes damage to the following organs: skin.
May cause damage to the following organs: kidneys, lungs, liver, upper respiratory tract.

Other Toxic Effects on Humans:

Hazardous in case of inhalation.
Slightly hazardous in case of skin contact (irritant, sensitizer), of ingestion.

Special Remarks on Toxicity to Animals:
Lowest Published Lethal Dose/Conc:
LDL [Rat] - Route: Oral; Dose: 5000 mg/kg
LDL [Guinea Pig] - Route: Oral; Dose: 5000 mg/kg

Special Remarks on Chronic Effects on Humans: May cause cancer based on animal test data

Special Remarks on other Toxic Effects on Humans:
Acute Potential Health Effects:
Skin: Nickel dust and fume can irritate skin.
Eyes: Nickel dust and fume can irritate eyes.
Inhalation: Inhalation of dust or fume may cause respiratory tract irritation with non-productive cough, hoarseness, sore throat, headache, vertigo, weakness, chest pain, followed by delayed effects, including tachypnea, dyspnea, and ARDS. Death due to ARDS has been reported following inhalation of high concentrations of respirable metallic nickel dust. Later effects may include pulmonary edema and fibrosis.
Ingestion: Metallic nickel is generally considered not to be acutely toxic if ingested. Ingestion may cause nausea, vomiting, abdominal , and diarrhea. Nickel may damage the kidneys(proteinuria), and may affect liver function. It may also affect behavior (somnolence), and cardiovascular system (increased cornary artery resistance, decreased myocardial contractility, myocardial damage, regional or general arteriolar or venus dilation).
Chronic Potential Health Effects:
Skin: May cause skin allergy. Nickel and nickel compounds are among the most common sensitizers inducing allergic contact dermatitis.
Inhalation: Chronic inhalation nickel dust or fume can cause chronic hypertrophic rhinitis, sinusitis, nasal polyps, perforation of the nasal septum, chronic pulmonary irritation, fibrosis, pulmonary edema, pulmonary eosinophilia, Pneumoconiosis, allergies (asthma-like allergy), and cancer of the nasal sinus cavities, lungs, and possibly other organs. Future exposures can cause asthma attacks with shortness of breath, wheezing, cough, and/or chest tightness. Chronic inhalation of nickel dust or fume may also affect the liver (impaired liver function tests), and blood (changes in red blood cell count).
Ingestion: Prolonged or repeated ingestion of nickel can be a source chronic urticaria and other signs of allergy. Chronic ingestion of NIckel may also affect respiration and cause pneumoconiosis or fibrosis.
Note: In the general population, sensitization occurs from exposure to nickel-containing coins, jewelry, watches,

Section 12: Ecological Information

Ecotoxicity: Not available.

BOD5 and COD: Not available.

Products of Biodegradation:
Possibly hazardous short term degradation products are not likely. However, long term degradation products may arise.

Toxicity of the Products of Biodegradation: The products of degradation are as toxic as the original product.

Special Remarks on the Products of Biodegradation: Not available.

Section 13: Disposal Considerations

Waste Disposal:
Waste must be disposed of in accordance with federal, state and local environmental control regulations.

Section 14: Transport Information

DOT Classification: Not a DOT controlled material (United States).

Identification: Not applicable.

Special Provisions for Transport: Not applicable.

Section 15: Other Regulatory Information

Federal and State Regulations:
California prop. 65: This product contains the following ingredients for which the State of California has found to cause cancer, birth defects or other reproductive harm, which would require a warning under the statute: Nickel metal
California prop. 65: This product contains the following ingredients for which the State of California has found to cause cancer which would require a warning under the statute: Nickel metal
Connecticut hazardous material survey.: Nickel metal
Illinois toxic substances disclosure to employee act: Nickel metal
Illinois chemical safety act: Nickel metal
New York release reporting list: Nickel metal
Rhode Island RTK hazardous substances: Nickel metal
Pennsylvania RTK: Nickel metal
Michigan critical material: Nickel metal
Massachusetts RTK: Nickel metal
Massachusetts spill list: Nickel metal
New Jersey: Nickel metal
New Jersey spill list: Nickel metal
Louisiana spill reporting: Nickel metal
California Director's List of Hazardous Substances: Nickel metal
TSCA 8(b) inventory: Nickel metal

Other Regulations:
OSHA: Hazardous by definition of Hazard Communication Standard (29 CFR 1910.1200).
EINECS: This product is on the European Inventory of Existing Commercial Chemical Substances.

Other Classifications:

WHMIS (Canada): CLASS D-2A: Material causing other toxic effects (VERY TOXIC).

DSCL (EEC):
R40- Possible risks of irreversible effects.
R43- May cause sensitization by skin contact.
S22- Do not breathe dust.
S36- Wear suitable protective clothing.

HMIS (U.S.A.):

Health Hazard: 2

Fire Hazard: 0

Reactivity: 0

Personal Protection: E

National Fire Protection Association (U.S.A.):

Health: 2

Flammability: 0

Reactivity: 0

Specific hazard:

Protective Equipment:
Gloves.
Lab coat.
Dust respirator. Be sure to use an approved/certified respirator or equivalent. Wear appropriate respirator when ventilation is inadequate.
Safety glasses.

Section 16: Other Information

References: Not available.

Other Special Considerations: Not available.

Created: 10/10/2005 08:42 PM

Last Updated: 10/10/2005 08:42 PM

The information above is believed to be accurate and represents the best information currently available to us. However, we make no warranty of merchantability or any other warranty, express or implied, with respect to such information, and we assume no liability resulting from its use. Users should make their own investigations to determine the suitability of the information for their particular purposes. In no event shall ScienceLab.com be liable for any claims, losses, or damages of any third party or for lost profits or any special, indirect, incidental, consequential or exemplary damages, howsoever arising, even if ScienceLab.com has been advised of the possibility of such damages.

Health	3
Fire	3
Reactivity	2
Personal Protection	J

Material Safety Data Sheet
Calcium MSDS

Section 1: Chemical Product and Company Identification

Product Name: Calcium

Catalog Codes: SLC2782

CAS#: 7440-70-2

RTECS: EV8040000

TSCA: TSCA 8(b) inventory: Calcium

CI#: Not available.

Synonym:

Chemical Formula: Ca

Contact Information:

Sciencelab.com, Inc.
14025 Smith Rd.
Houston, Texas 77396

US Sales: **1-800-901-7247**
International Sales: **1-281-441-4400**

Order Online: ScienceLab.com

CHEMTREC (24HR Emergency Telephone), call: 1-800-424-9300

International CHEMTREC, call: 1-703-527-3887

For non-emergency assistance, call: 1-281-441-4400

Section 2: Composition and Information on Ingredients

Composition:

Name	CAS #	% by Weight
Calcium	7440-70-2	100

Toxicological Data on Ingredients: Calcium LD50: Not available. LC50: Not available.

Section 3: Hazards Identification

Potential Acute Health Effects:
Hazardous in case of skin contact (irritant), of eye contact (irritant), of ingestion, of inhalation. Corrosive to eyes and skin. The amount of tissue damage depends on length of contact. Eye contact can result in corneal damage or blindness. Skin contact can produce inflammation and blistering. Inhalation of dust will produce irritation to gastro-intestinal or respiratory tract, characterized by burning, sneezing and coughing. Severe over-exposure can produce lung damage, choking, unconsciousness or death.

Potential Chronic Health Effects:
CARCINOGENIC EFFECTS: Not available.
MUTAGENIC EFFECTS: Not available.
TERATOGENIC EFFECTS: Not available.
DEVELOPMENTAL TOXICITY: Not available.
The substance is toxic to lungs, mucous membranes.
Repeated or prolonged exposure to the substance can produce target organs damage. Repeated exposure of the eyes to a low level of dust can produce eye irritation. Repeated skin exposure can produce local skin destruction, or dermatitis. Repeated inhalation of dust can produce varying degree of respiratory irritation or lung damage.

Section 4: First Aid Measures

Eye Contact: Check for and remove any contact lenses. Do not use an eye ointment. Seek medical attention.

Skin Contact:
If the chemical got onto the clothed portion of the body, remove the contaminated clothes as quickly as possible, protecting your own hands and body. Place the victim under a deluge shower. If the chemical got on the victim's exposed skin, such as the hands : Gently and thoroughly wash the contaminated skin with running water and non-abrasive soap. Be particularly careful to clean folds, crevices, creases and groin. If irritation persists, seek medical attention. Wash contaminated clothing before reusing.

Serious Skin Contact:
Wash with a disinfectant soap and cover the contaminated skin with an anti-bacterial cream. Seek medical attention.

Inhalation: Allow the victim to rest in a well ventilated area. Seek immediate medical attention.

Serious Inhalation:
Evacuate the victim to a safe area as soon as possible. Loosen tight clothing such as a collar, tie, belt or waistband. If breathing is difficult, administer oxygen. If the victim is not breathing, perform mouth-to-mouth resuscitation. WARNING: It may be hazardous to the person providing aid to give mouth-to-mouth resuscitation when the inhaled material is toxic, infectious or corrosive. Seek immediate medical attention.

Ingestion:
Do not induce vomiting. Loosen tight clothing such as a collar, tie, belt or waistband. If the victim is not breathing, perform mouth-to-mouth resuscitation. Seek immediate medical attention.

Serious Ingestion: Not available.

Section 5: Fire and Explosion Data

Flammability of the Product: Flammable.

Auto-Ignition Temperature: Not available.

Flash Points: Not available.

Flammable Limits: Not available.

Products of Combustion: Some metallic oxides.

Fire Hazards in Presence of Various Substances: Not available.

Explosion Hazards in Presence of Various Substances:
Risks of explosion of the product in presence of mechanical impact: Not available.
Risks of explosion of the product in presence of static discharge: Not available.

Fire Fighting Media and Instructions:
Flammable solid.
SMALL FIRE: Use DRY chemical powder.
LARGE FIRE: Use water spray or fog.

Special Remarks on Fire Hazards: Not available.

Special Remarks on Explosion Hazards: Not available.

Section 6: Accidental Release Measures

Small Spill: Use appropriate tools to put the spilled solid in a convenient waste disposal container.

Large Spill:
Corrosive solid. Flammable solid that, in contact with water, emits flammable gases.
Stop leak if without risk. Do not get water inside container. Do not touch spilled material. Cover with dry earth, sand or other non-combustible material. Use water spray to reduce vapors. Prevent entry into sewers, basements or confined areas; dike if needed. Eliminate all ignition sources. Call for assistance on disposal.

Section 7: Handling and Storage

Precautions:
Keep under inert atmosphere. Keep container dry. Do not breathe dust. Never add water to this product Wear suitable protective clothing In case of insufficient ventilation, wear suitable respiratory equipment If you feel unwell, seek medical attention and show the label when possible. Avoid contact with skin and eyes Keep away from incompatibles such as acids, moisture.

Storage:
Flammable materials should be stored in a separate safety storage cabinet or room. Keep away from heat. Keep away from sources of ignition. Keep container tightly closed. Keep in a cool, well-ventilated place. Ground all equipment containing material. Keep container dry. Keep in a cool place.

Section 8: Exposure Controls/Personal Protection

Engineering Controls:
Use process enclosures, local exhaust ventilation, or other engineering controls to keep airborne levels below recommended exposure limits. If user operations generate dust, fume or mist, use ventilation to keep exposure to airborne contaminants below the exposure limit.

Personal Protection:
Splash goggles. Lab coat. Vapor and dust respirator. Be sure to use an approved/certified respirator or equivalent. Gloves.

Personal Protection in Case of a Large Spill:
Splash goggles. Full suit. Vapor and dust respirator. Boots. Gloves. A self contained breathing apparatus should be used to avoid inhalation of the product. Suggested protective clothing might not be sufficient; consult a specialist BEFORE handling this product.

Exposure Limits: Not available.

Section 9: Physical and Chemical Properties

Physical state and appearance: Solid.

Odor: Not available.

Taste: Not available.

Molecular Weight: 40.08 g/mole

Color: Not available.

pH (1% soln/water): Not available.

Boiling Point: 1484°C (2703.2°F)

Melting Point: 839°C (1542.2°F)

Critical Temperature: Not available.

Specific Gravity: 1.54 (Water = 1)

Vapor Pressure: Not applicable.

Vapor Density: Not available.

Volatility: Not available.

Odor Threshold: Not available.

Water/Oil Dist. Coeff.: Not available.

Ionicity (in Water): Not available.

Dispersion Properties: Not available.

Solubility: Not available.

Section 10: Stability and Reactivity Data

Stability: The product is stable.

Instability Temperature: Not available.

Conditions of Instability: Not available.

Incompatibility with various substances:
Highly reactive with acids.
Reactive with moisture.
The product reacts violently with water to emit flammable but non toxic gases.

Corrosivity: Non-corrosive in presence of glass.

Special Remarks on Reactivity: Not available.

Special Remarks on Corrosivity: Not available.

Polymerization: No.

Section 11: Toxicological Information

Routes of Entry: Eye contact. Inhalation. Ingestion.

Toxicity to Animals:
LD50: Not available.
LC50: Not available.

Chronic Effects on Humans: The substance is toxic to lungs, mucous membranes.

Other Toxic Effects on Humans: Hazardous in case of skin contact (irritant), of ingestion, of inhalation.

Special Remarks on Toxicity to Animals: Not available.

Special Remarks on Chronic Effects on Humans: Not available.

Special Remarks on other Toxic Effects on Humans: Not available.

Section 12: Ecological Information

Ecotoxicity: Not available.

BOD5 and COD: Not available.

Products of Biodegradation:
Possibly hazardous short term degradation products are not likely. However, long term degradation products may arise.

Toxicity of the Products of Biodegradation: The products of degradation are less toxic.

Special Remarks on the Products of Biodegradation: Not available.

Section 13: Disposal Considerations

Waste Disposal:

Section 14: Transport Information

DOT Classification: CLASS 4.3: Material that emits flammable gases on contact with water.

Identification: : Calcium : UN1401 PG: II

Special Provisions for Transport: Not available.

Section 15: Other Regulatory Information

Federal and State Regulations:
Pennsylvania RTK: Calcium
Massachusetts RTK: Calcium
TSCA 8(b) inventory: Calcium

Other Regulations: OSHA: Hazardous by definition of Hazard Communication Standard (29 CFR 1910.1200).

Other Classifications:

WHMIS (Canada):
CLASS B-6: Reactive and very flammable material.
CLASS E: Corrosive solid.

DSCL (EEC): R36/38- Irritating to eyes and skin.

HMIS (U.S.A.):

Health Hazard: 3

Fire Hazard: 3

Reactivity: 2

Personal Protection: j

National Fire Protection Association (U.S.A.):

Health: 3

Flammability: 3

Reactivity: 2

Specific hazard:

Protective Equipment:
Gloves.
Lab coat.
Vapor and dust respirator. Be sure to use an approved/certified respirator or equivalent. Wear appropriate respirator when ventilation is inadequate.
Splash goggles.

Section 16: Other Information

References: Not available.

Other Special Considerations: Not available.

Created: 10/11/2005 11:30 AM

Last Updated: 11/06/2008 12:00 PM

The information above is believed to be accurate and represents the best information currently available to us. However, we make no warranty of merchantability or any other warranty, express or implied, with respect to such information, and we assume no liability resulting from its use. Users should make their own investigations to determine the suitability of the information for their particular purposes. In no event shall ScienceLab.com be liable for any claims, losses, or damages of any third party or for lost profits or any special, indirect, incidental, consequential or exemplary damages, howsoever arising, even if ScienceLab.com has been advised of the possibility of such damages.

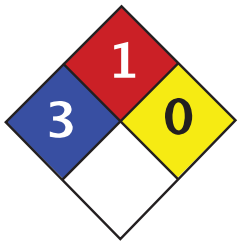

Health	3
Fire	1
Reactivity	0
Personal Protection	E

Material Safety Data Sheet
Cadmium MSDS

Section 1: Chemical Product and Company Identification

Product Name: Cadmium

Catalog Codes: SLC3484, SLC5272, SLC2482

CAS#: 7440-43-9

RTECS: EU9800000

TSCA: TSCA 8(b) inventory: Cadmium

CI#: Not applicable.

Synonym:

Chemical Name: Cadmium

Chemical Formula: Cd

Contact Information:

Sciencelab.com, Inc.
14025 Smith Rd.
Houston, Texas 77396

US Sales: **1-800-901-7247**
International Sales: **1-281-441-4400**

Order Online: ScienceLab.com

CHEMTREC (24HR Emergency Telephone), call: 1-800-424-9300

International CHEMTREC, call: 1-703-527-3887

For non-emergency assistance, call: 1-281-441-4400

Section 2: Composition and Information on Ingredients

Composition:

Name	CAS #	% by Weight
Cadmium	7440-43-9	100

Toxicological Data on Ingredients: Cadmium: ORAL (LD50): Acute: 2330 mg/kg [Rat.]. 890 mg/kg [Mouse]. DUST (LC50): Acute: 50 ppm 4 hour(s) [Rat].

Section 3: Hazards Identification

Potential Acute Health Effects:
Hazardous in case of ingestion, of inhalation. Slightly hazardous in case of skin contact (irritant, sensitizer), of eye contact (irritant). Severe over-exposure can result in death.

Potential Chronic Health Effects:
CARCINOGENIC EFFECTS: Classified A2 (Suspected for human.) by ACGIH, 2 (Reasonably anticipated.) by NTP.
MUTAGENIC EFFECTS: Not available.
TERATOGENIC EFFECTS: Not available.
DEVELOPMENTAL TOXICITY: Not available.
The substance is toxic to kidneys, lungs, liver.
Repeated or prolonged exposure to the substance can produce target organs damage. Repeated exposure to an highly toxic material may produce general deterioration of health by an accumulation in one or many human organs.

Section 4: First Aid Measures

Eye Contact: No known effect on eye contact, rinse with water for a few minutes.

Skin Contact:
After contact with skin, wash immediately with plenty of water. Gently and thoroughly wash the contaminated skin with running water and non-abrasive soap. Be particularly careful to clean folds, crevices, creases and groin. Cover the irritated skin with an emollient. If irritation persists, seek medical attention. Wash contaminated clothing before reusing.

Serious Skin Contact: Not available.

Inhalation: Allow the victim to rest in a well ventilated area. Seek immediate medical attention.

Serious Inhalation:
Evacuate the victim to a safe area as soon as possible. Loosen tight clothing such as a collar, tie, belt or waistband. If breathing is difficult, administer oxygen. If the victim is not breathing, perform mouth-to-mouth resuscitation. WARNING: It may be hazardous to the person providing aid to give mouth-to-mouth resuscitation when the inhaled material is toxic, infectious or corrosive. Seek immediate medical attention.

Ingestion:
Do not induce vomiting. Examine the lips and mouth to ascertain whether the tissues are damaged, a possible indication that the toxic material was ingested; the absence of such signs, however, is not conclusive. Loosen tight clothing such as a collar, tie, belt or waistband. If the victim is not breathing, perform mouth-to-mouth resuscitation. Seek immediate medical attention.

Serious Ingestion: Not available.

Section 5: Fire and Explosion Data

Flammability of the Product: May be combustible at high temperature.

Auto-Ignition Temperature: 570°C (1058°F)

Flash Points: Not available.

Flammable Limits: Not available.

Products of Combustion: Some metallic oxides.

Fire Hazards in Presence of Various Substances:
Non-flammable in presence of open flames and sparks, of heat, of oxidizing materials, of reducing materials, of combustible materials, of moisture.

Explosion Hazards in Presence of Various Substances:
Risks of explosion of the product in presence of mechanical impact: Not available.
Risks of explosion of the product in presence of static discharge: Not available.

Fire Fighting Media and Instructions:
SMALL FIRE: Use DRY chemical powder.
LARGE FIRE: Use water spray, fog or foam. Do not use water jet.

Special Remarks on Fire Hazards:
Material in powder form, capable of creating a dust explosion. When heated to decomposition it emits toxic fumes.

Special Remarks on Explosion Hazards: Not available.

Section 6: Accidental Release Measures

Small Spill: Use appropriate tools to put the spilled solid in a convenient waste disposal container.

Large Spill:
Use a shovel to put the material into a convenient waste disposal container. Be careful that the product is not present at a concentration level above TLV. Check TLV on the MSDS and with local authorities.

Section 7: Handling and Storage

Precautions:
Keep locked up Keep away from heat. Keep away from sources of ignition. Empty containers pose a fire risk, evaporate the residue under a fume hood. Ground all equipment containing material. Do not ingest. Do not breathe dust. Wear suitable protective clothing In case of insufficient ventilation, wear suitable respiratory equipment If ingested, seek medical advice immediately and show the container or the label. Keep away from incompatibles such as oxidizing agents.

Storage:
Keep container dry. Keep in a cool place. Ground all equipment containing material. Keep container tightly closed. Keep in a cool, well-ventilated place. Highly toxic or infectious materials should be stored in a separate locked safety storage cabinet or room.

Section 8: Exposure Controls/Personal Protection

Engineering Controls:
Use process enclosures, local exhaust ventilation, or other engineering controls to keep airborne levels below recommended exposure limits. If user operations generate dust, fume or mist, use ventilation to keep exposure to airborne contaminants below the exposure limit.

Personal Protection: Safety glasses. Lab coat. Dust respirator. Be sure to use an approved/certified respirator or equivalent. Gloves.

Personal Protection in Case of a Large Spill:
Splash goggles. Full suit. Dust respirator. Boots. Gloves. A self contained breathing apparatus should be used to avoid inhalation of the product. Suggested protective clothing might not be sufficient; consult a specialist BEFORE handling this product.

Exposure Limits:
TWA: 0.01 (ppm)
Consult local authorities for acceptable exposure limits.

Section 9: Physical and Chemical Properties

Physical state and appearance: Solid. (Lustrous solid.)

Odor: Not available.

Taste: Not available.

Molecular Weight: 112.4 g/mole

Color: Silvery.

pH (1% soln/water): Not applicable.

Boiling Point: 765°C (1409°F)

Melting Point: 320.9°C (609.6°F)

Critical Temperature: Not available.

Specific Gravity: 8.64 (Water = 1)

Vapor Pressure: Not applicable.

Vapor Density: Not available.

Volatility: Not available.

Odor Threshold: Not available.

Water/Oil Dist. Coeff.: Not available.

Ionicity (in Water): Not available.

Dispersion Properties: Not available.

Solubility: Insoluble in cold water, hot water, methanol, diethyl ether, n-octanol.

Section 10: Stability and Reactivity Data

Stability: The product is stable.

Instability Temperature: Not available.

Conditions of Instability: Not available.

Incompatibility with various substances: Reactive with oxidizing agents.

Corrosivity: Not considered to be corrosive for metals and glass.

Special Remarks on Reactivity: Reacts violently with potassium.

Special Remarks on Corrosivity: Not available.

Polymerization: No.

Section 11: Toxicological Information

Routes of Entry: Inhalation. Ingestion.

Toxicity to Animals:
WARNING: THE LC50 VALUES HEREUNDER ARE ESTIMATED ON THE BASIS OF A 4-HOUR EXPOSURE.
Acute oral toxicity (LD50): 890 mg/kg [Mouse].
Acute toxicity of the dust (LC50): 229.9 mg/m3 4 hour(s) [Rat].

Chronic Effects on Humans:
CARCINOGENIC EFFECTS: Classified A2 (Suspected for human.) by ACGIH, 2 (Reasonably anticipated.) by NTP.
The substance is toxic to kidneys, lungs, liver.

Other Toxic Effects on Humans:
Hazardous in case of ingestion, of inhalation.
Slightly hazardous in case of skin contact (irritant, sensitizer).

Special Remarks on Toxicity to Animals: Not available.

Special Remarks on Chronic Effects on Humans: An allergen. 0047 Animal: embryotoxic, passes through the placental barrier.

Special Remarks on other Toxic Effects on Humans: May cause allergic reactions, exzema and/or dehydration of the skin.

Section 12: Ecological Information

Ecotoxicity: Not available.

BOD5 and COD: Not available.

Products of Biodegradation:
Possibly hazardous short term degradation products are not likely. However, long term degradation products may arise.

Toxicity of the Products of Biodegradation: The products of degradation are as toxic as the original product.

Special Remarks on the Products of Biodegradation: Not available.

Section 13: Disposal Considerations

Waste Disposal:

Section 14: Transport Information

DOT Classification:

Identification:

Special Provisions for Transport:

Section 15: Other Regulatory Information

Federal and State Regulations:
California prop. 65: This product contains the following ingredients for which the State of California has found to cause cancer, birth defects or other reproductive harm, which would require a warning under the statute: Cadmium
California prop. 65: This product contains the following ingredients for which the State of California has found to cause cancer which would require a warning under the statute: Cadmium
Pennsylvania RTK: Cadmium
Massachusetts RTK: Cadmium
TSCA 8(b) inventory: Cadmium
SARA 313 toxic chemical notification and release reporting: Cadmium
CERCLA: Hazardous substances.: Cadmium

Other Regulations: OSHA: Hazardous by definition of Hazard Communication Standard (29 CFR 1910.1200).

Other Classifications:

WHMIS (Canada):
CLASS D-1A: Material causing immediate and serious toxic effects (VERY TOXIC).
CLASS D-2A: Material causing other toxic effects (VERY TOXIC).

DSCL (EEC):
R26- Very toxic by inhalation.
R45- May cause cancer.

HMIS (U.S.A.):

Health Hazard: 3

Fire Hazard: 1

Reactivity: 0

Personal Protection: E

National Fire Protection Association (U.S.A.):

Health: 3

Flammability: 1

Reactivity: 0

Specific hazard:

Protective Equipment:
Gloves.
Lab coat.
Dust respirator. Be sure to use an approved/certified respirator or equivalent. Wear appropriate respirator when ventilation is inadequate.
Safety glasses.

Section 16: Other Information

References:
-Hawley, G.G.. The Condensed Chemical Dictionary, 11e ed., New York N.Y., Van Nostrand Reinold, 1987.
-Liste des produits purs tératogènes, mutagènes, cancérogènes. Répertoire toxicologique de la Commission de la Santé et de la Sécurité du Travail du Québec.
-Material safety data sheet emitted by: la Commission de la Santé et de la Sécurité du Travail du Québec.
-SAX, N.I. Dangerous Properties of Indutrial Materials. Toronto, Van Nostrand Reinold, 6e ed. 1984.
-The Sigma-Aldrich Library of Chemical Safety Data, Edition II.
-Guide de la loi et du règlement sur le transport des marchandises dangeureuses au canada. Centre de conformité internatinal Ltée. 1986.

Other Special Considerations: Not available.

Created: 10/09/2005 04:29 PM

Last Updated: 11/06/2008 12:00 PM

The information above is believed to be accurate and represents the best information currently available to us. However, we make no warranty of merchantability or any other warranty, express or implied, with respect to such information, and we assume no liability resulting from its use. Users should make their own investigations to determine the suitability of the information for their particular purposes. In no event shall ScienceLab.com be liable for any claims, losses, or damages of any third party or for lost profits or any special, indirect, incidental, consequential or exemplary damages, howsoever arising, even if ScienceLab.com has been advised of the possibility of such damages.

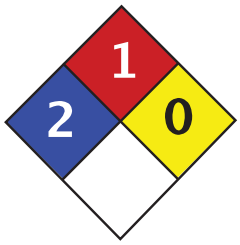

Health	2
Fire	1
Reactivity	0
Personal Protection	E

Material Safety Data Sheet
Copper MSDS

Section 1: Chemical Product and Company Identification

Product Name: Copper

Catalog Codes: SLC4939, SLC2152, SLC3943, SLC1150, SLC2941, SLC4729, SLC1936, SLC3727, SLC5515

CAS#: 7440-50-8

RTECS: GL5325000

TSCA: TSCA 8(b) inventory: Copper

CI#: Not available.

Synonym:

Chemical Name: Not available.

Chemical Formula: Cu

Contact Information:

Sciencelab.com, Inc.
14025 Smith Rd.
Houston, Texas 77396

US Sales: **1-800-901-7247**
International Sales: **1-281-441-4400**

Order Online: ScienceLab.com

CHEMTREC (24HR Emergency Telephone), call: 1-800-424-9300

International CHEMTREC, call: 1-703-527-3887

For non-emergency assistance, call: 1-281-441-4400

Section 2: Composition and Information on Ingredients

Composition:

Name	CAS #	% by Weight
Copper	7440-50-8	100

Toxicological Data on Ingredients: Copper LD50: Not available. LC50: Not available.

Section 3: Hazards Identification

Potential Acute Health Effects:
Very hazardous in case of ingestion. Hazardous in case of eye contact (irritant), of inhalation. Slightly hazardous in case of skin contact (irritant).

Potential Chronic Health Effects:
CARCINOGENIC EFFECTS: Not available.
MUTAGENIC EFFECTS: Not available.
TERATOGENIC EFFECTS: Not available.
DEVELOPMENTAL TOXICITY: Not available.
The substance is toxic to lungs, mucous membranes.
Repeated or prolonged exposure to the substance can produce target organs damage.

Section 4: First Aid Measures

Eye Contact: Check for and remove any contact lenses. Do not use an eye ointment. Seek medical attention.

Skin Contact:
After contact with skin, wash immediately with plenty of water. Gently and thoroughly wash the contaminated skin with running water and non-abrasive soap. Be particularly careful to clean folds, crevices, creases and groin. Cover the irritated skin with an emollient. If irritation persists, seek medical attention. Wash contaminated clothing before reusing.

Serious Skin Contact: Not available.

Inhalation: Allow the victim to rest in a well ventilated area. Seek immediate medical attention.

Serious Inhalation: Not available.

Ingestion:
Do not induce vomiting. Loosen tight clothing such as a collar, tie, belt or waistband. If the victim is not breathing, perform mouth-to-mouth resuscitation. Seek immediate medical attention.

Serious Ingestion: Not available.

Section 5: Fire and Explosion Data

Flammability of the Product: May be combustible at high temperature.

Auto-Ignition Temperature: Not available.

Flash Points: Not available.

Flammable Limits: Not available.

Products of Combustion: Some metallic oxides.

Fire Hazards in Presence of Various Substances: Not available.

Explosion Hazards in Presence of Various Substances:
Risks of explosion of the product in presence of mechanical impact: Not available.
Risks of explosion of the product in presence of static discharge: Not available.

Fire Fighting Media and Instructions:
SMALL FIRE: Use DRY chemical powder.
LARGE FIRE: Use water spray, fog or foam. Do not use water jet.

Special Remarks on Fire Hazards: Not available.

Special Remarks on Explosion Hazards: Not available.

Section 6: Accidental Release Measures

Small Spill:
Use appropriate tools to put the spilled solid in a convenient waste disposal container. Finish cleaning by spreading water on the contaminated surface and dispose of according to local and regional authority requirements.

Large Spill:
Use a shovel to put the material into a convenient waste disposal container. Finish cleaning by spreading water on the contaminated surface and allow to evacuate through the sanitary system. Be careful that the product is not present at a concentration level above TLV. Check TLV on the MSDS and with local authorities.

Section 7: Handling and Storage

Precautions:
Keep away from heat. Keep away from sources of ignition. Empty containers pose a fire risk, evaporate the residue under a fume hood. Ground all equipment containing material. Do not breathe dust. Avoid contact with eyes Wear suitable protective clothing In case of insufficient ventilation, wear suitable respiratory equipment If you feel unwell, seek medical attention and show the label when possible.

Storage:
Keep container dry. Keep in a cool place. Ground all equipment containing material. Keep container tightly closed. Keep in a cool, well-ventilated place. Combustible materials should be stored away from extreme heat and away from strong oxidizing agents.

Section 8: Exposure Controls/Personal Protection

Engineering Controls:
Use process enclosures, local exhaust ventilation, or other engineering controls to keep airborne levels below recommended exposure limits. If user operations generate dust, fume or mist, use ventilation to keep exposure to airborne contaminants below the exposure limit.

Personal Protection:
Splash goggles. Lab coat. Dust respirator. Be sure to use an approved/certified respirator or equivalent. Gloves.

Personal Protection in Case of a Large Spill:
Splash goggles. Full suit. Dust respirator. Boots. Gloves. A self contained breathing apparatus should be used to avoid inhalation of the product. Suggested protective clothing might not be sufficient; consult a specialist BEFORE handling this product.

Exposure Limits:
TWA: 1 (mg/m3) from ACGIH [1990]
Consult local authorities for acceptable exposure limits.

Section 9: Physical and Chemical Properties

Physical state and appearance: Solid.

Odor: Not available.

Taste: Not available.

Molecular Weight: 63.54 g/mole

Color: Not available.

pH (1% soln/water): Not applicable.

Boiling Point: 2595°C (4703°F)

Melting Point: 1083°C (1981.4°F)

Critical Temperature: Not available.

Specific Gravity: 8.94 (Water = 1)

Vapor Pressure: Not applicable.

Vapor Density: Not available.

Volatility: Not available.

Odor Threshold: Not available.

Water/Oil Dist. Coeff.: Not available.

Ionicity (in Water): Not available.

Dispersion Properties: Not available.

Solubility: Insoluble in cold water.

Section 10: Stability and Reactivity Data

Stability: The product is stable.

Instability Temperature: Not available.

Conditions of Instability: Not available.

Incompatibility with various substances: Not available.

Corrosivity: Non-corrosive in presence of glass.

Special Remarks on Reactivity: Not available.

Special Remarks on Corrosivity: Not available.

Polymerization: No.

Section 11: Toxicological Information

Routes of Entry: Absorbed through skin. Eye contact. Inhalation. Ingestion.

Toxicity to Animals:
LD50: Not available.
LC50: Not available.

Chronic Effects on Humans: The substance is toxic to lungs, mucous membranes.

Other Toxic Effects on Humans:
Very hazardous in case of ingestion.
Hazardous in case of inhalation.
Slightly hazardous in case of skin contact (irritant).

Special Remarks on Toxicity to Animals: Not available.

Special Remarks on Chronic Effects on Humans: Human: passes through the placenta, excreted in maternal milk.

Special Remarks on other Toxic Effects on Humans: Not available.

Section 12: Ecological Information

Ecotoxicity: Not available.

BOD5 and COD: Not available.

Products of Biodegradation:
Possibly hazardous short term degradation products are not likely. However, long term degradation products may arise.

Toxicity of the Products of Biodegradation: The products of degradation are as toxic as the original product.

Special Remarks on the Products of Biodegradation: Not available.

Section 13: Disposal Considerations

Waste Disposal:

Section 14: Transport Information

DOT Classification: Not a DOT controlled material (United States).

Identification: Not applicable.

Special Provisions for Transport: Marine Pollutant

Section 15: Other Regulatory Information

Federal and State Regulations:
Pennsylvania RTK: Copper
Massachusetts RTK: Copper
TSCA 8(b) inventory: Copper
CERCLA: Hazardous substances.: Copper

Other Regulations: OSHA: Hazardous by definition of Hazard Communication Standard (29 CFR 1910.1200).

Other Classifications:

WHMIS (Canada): CLASS D-2A: Material causing other toxic effects (VERY TOXIC).

DSCL (EEC): R36- Irritating to eyes.

HMIS (U.S.A.):

Health Hazard: 2

Fire Hazard: 1

Reactivity: 0

Personal Protection: E

National Fire Protection Association (U.S.A.):

Health: 2

Flammability: 1

Reactivity: 0

Specific hazard:

Protective Equipment:
Gloves.
Lab coat.
Dust respirator. Be sure to use an approved/certified respirator or equivalent. Wear appropriate respirator

when ventilation is inadequate.
Splash goggles.

Section 16: Other Information

References: Not available.

Other Special Considerations: Not available.

Created: 10/09/2005 04:58 PM

Last Updated: 11/06/2008 12:00 PM

The information above is believed to be accurate and represents the best information currently available to us. However, we make no warranty of merchantability or any other warranty, express or implied, with respect to such information, and we assume no liability resulting from its use. Users should make their own investigations to determine the suitability of the information for their particular purposes. In no event shall ScienceLab.com be liable for any claims, losses, or damages of any third party or for lost profits or any special, indirect, incidental, consequential or exemplary damages, howsoever arising, even if ScienceLab.com has been advised of the possibility of such damages.

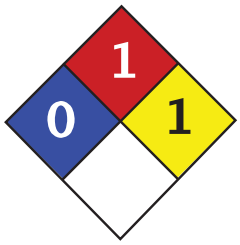

Health	1
Fire	3
Reactivity	2
Personal Protection	E

Material Safety Data Sheet
Magnesium MSDS

Section 1: Chemical Product and Company Identification

Product Name: Magnesium

Catalog Codes: SLM4408, SLM2263, SLM3637

CAS#: 7439-95-4

RTECS: OM2100000

TSCA: TSCA 8(b) inventory: Magnesium

CI#: Not applicable.

Synonym: Magnesium ribbons, turnings or sticks

Chemical Name: Magnesium

Chemical Formula: Mg

Contact Information:

Sciencelab.com, Inc.
14025 Smith Rd.
Houston, Texas 77396

US Sales: **1-800-901-7247**
International Sales: **1-281-441-4400**

Order Online: ScienceLab.com

CHEMTREC (24HR Emergency Telephone), call: 1-800-424-9300

International CHEMTREC, call: 1-703-527-3887

For non-emergency assistance, call: 1-281-441-4400

Section 2: Composition and Information on Ingredients

Composition:

Name	CAS #	% by Weight
Magnesium	7439-95-4	100

Toxicological Data on Ingredients: Magnesium LD50: Not available. LC50: Not available.

Section 3: Hazards Identification

Potential Acute Health Effects: Slightly hazardous in case of skin contact (irritant), of eye contact (irritant), of ingestion, of inhalation.

Potential Chronic Health Effects:
CARCINOGENIC EFFECTS: Not available.
MUTAGENIC EFFECTS: Not available.
TERATOGENIC EFFECTS: Not available.
DEVELOPMENTAL TOXICITY: Not available.
Repeated or prolonged exposure is not known to aggravate medical condition.

Section 4: First Aid Measures

Eye Contact:
Check for and remove any contact lenses. In case of contact, immediately flush eyes with plenty of water for at

least 15 minutes. Get medical attention if irritation occurs.

Skin Contact: Wash with soap and water. Cover the irritated skin with an emollient. Get medical attention if irritation develops.

Serious Skin Contact: Not available.

Inhalation:
If inhaled, remove to fresh air. If not breathing, give artificial respiration. If breathing is difficult, give oxygen. Get medical attention.

Serious Inhalation:
Evacuate the victim to a safe area as soon as possible. Loosen tight clothing such as a collar, tie, belt or waistband. If breathing is difficult, administer oxygen. If the victim is not breathing, perform mouth-to-mouth resuscitation. Seek medical attention.

Ingestion:
Do NOT induce vomiting unless directed to do so by medical personnel. Never give anything by mouth to an unconscious person. If large quantities of this material are swallowed, call a physician immediately. Loosen tight clothing such as a collar, tie, belt or waistband.

Serious Ingestion: Not available.

Section 5: Fire and Explosion Data

Flammability of the Product: Flammable.

Auto-Ignition Temperature: Not available.

Flash Points: Not available.

Flammable Limits: Not available.

Products of Combustion: Some metallic oxides.

Fire Hazards in Presence of Various Substances:
Highly flammable in presence of open flames and sparks, of heat.
Flammable in presence of acids, of moisture.
Non-flammable in presence of shocks.

Explosion Hazards in Presence of Various Substances:
Risks of explosion of the product in presence of mechanical impact: Not available.
Risks of explosion of the product in presence of static discharge: Not available.
Explosive in presence of acids, of moisture.

Fire Fighting Media and Instructions:
Flammable solid.
SMALL FIRE: Use DRY chemical powder.
LARGE FIRE: Use water spray or fog. Cool containing vessels with water jet in order to prevent pressure build-up, autoignition or explosion.

Special Remarks on Fire Hazards:
Magnesium turnings, chips or granules, ribbons, are flammable. They can be easily ignited. They may reignite after fire is extinguished. Produces flammable gases on contact with water and acid. May ignite on contact with water or moist air.
Magnesium fires do not flare up violently unless moisture is present.

Special Remarks on Explosion Hazards: Reacts with acids and water to form hydrogen gas with is highly flammable and eplosive

Section 6: Accidental Release Measures

Small Spill: Use appropriate tools to put the spilled solid in a convenient waste disposal container.

Large Spill:
Flammable solid.
Stop leak if without risk. Do not touch spilled material. Use water spray curtain to divert vapor drift. Prevent entry into sewers, basements or confined areas; dike if needed. Eliminate all ignition sources. Call for assistance on disposal.

Section 7: Handling and Storage

Precautions:
Keep away from heat. Keep away from sources of ignition. Ground all equipment containing material. Do not breathe dust. Keep away from incompatibles such as oxidizing agents, acids, moisture.

Storage:
Keep container in a cool, well-ventilated area. Keep container tightly closed and sealed until ready for use. Avoid all possible sources of ignition (spark or flame). Moisture sensitive. Dangerous when wet.

Section 8: Exposure Controls/Personal Protection

Engineering Controls:
Use process enclosures, local exhaust ventilation, or other engineering controls to keep airborne levels below recommended exposure limits. If user operations generate dust, fume or mist, use ventilation to keep exposure to airborne contaminants below the exposure limit.

Personal Protection: Safety glasses. Lab coat. Dust respirator. Be sure to use an approved/certified respirator or equivalent. Gloves.

Personal Protection in Case of a Large Spill:
Splash goggles. Full suit. Dust respirator. Boots. Gloves. A self contained breathing apparatus should be used to avoid inhalation of the product. Suggested protective clothing might not be sufficient; consult a specialist BEFORE handling this product.

Exposure Limits: Not available.

Section 9: Physical and Chemical Properties

Physical state and appearance: Solid. (Metal solid)

Odor: Odorless.

Taste: Not available.

Molecular Weight: 24.31 g/mole

Color: Silver-white

pH (1% soln/water): Not applicable.

Boiling Point: 1100°C (2012°F)

Melting Point: 651°C (1203.8°F)

Critical Temperature: Not available.

Specific Gravity: 1.74 (Water = 1)

Vapor Pressure: Not applicable.

Vapor Density: Not available.

Volatility: Not available.

Odor Threshold: Not available.

Water/Oil Dist. Coeff.: Not available.

Ionicity (in Water): Not available.

Dispersion Properties: Not available.

Solubility:
Very slightly soluble in hot water.
Insoluble in cold water.
Insoluble in chromium trioxides, and mineral acids, alkalies.
Slightly soluble with decomposition in hot water.
Soluble in concentrated hydrogen fluoride, and ammonium salts.

Section 10: Stability and Reactivity Data

Stability: The product is stable.

Instability Temperature: Not available.

Conditions of Instability: Heat, incompatible materials, water or moisture, moist air.

Incompatibility with various substances: Reactive with oxidizing agents, acids, moisture.

Corrosivity: Non-corrosive in presence of glass.

Special Remarks on Reactivity:
Violent chemical reaction with oxidizing agents.
Reacts with water to create hydrogen gas and heat. Must be kept dry.
Reacts with acids to form hydrogen gas which is highly flammable and explosive.
Magnesium forms hazardous or explosive mixtures with aluminum and potassium perchlorate; ammonium nitrate; barium nitrate, barium dioxide and zinc; beryllium oxide; boron phosphodiiodide; bromobenzyl trifluoride; cadmium cyanide; cadmium oxide; calcium carbide; carbonates; carbon tetrachloride; chlorine; chlorine trifluoride; chloroform; cobalt cyanide; copper cyanide; copper sulfate(anhydrous), ammonium nitrate, potassium chlorate and water; cupric oxide; cupric sulfate; fluorine; gold cyanide; hydrogen and calcium carbonate; hydrogen iodide; hydrogen peroxide; iodine; lead cyanide; mercuric oxide; mercury cyanide; methyl chloride; molybdenum trioxide; nickel cyanide; nitric acid; nitrogen dioxide; oxygen (liquid); performic acid; phosphates; potassium chlorate; potassium perchlorate; silver nitrate; silver oxide; sodium perchlorate; sodium peroxide; sodium peroxide and carbon dioxide; stannic oxide; sulfates; trichloroethylene; zinc cyanide; zinc oxide.

Special Remarks on Corrosivity: Not available.

Polymerization: Will not occur.

Section 11: Toxicological Information

Routes of Entry: Inhalation. Ingestion.

Toxicity to Animals:
LD50: Not available.
LC50: Not available.

Chronic Effects on Humans: Not available.

Other Toxic Effects on Humans: Slightly hazardous in case of skin contact (irritant), of ingestion, of inhalation.

Special Remarks on Toxicity to Animals: Not available.

Special Remarks on Chronic Effects on Humans: Not available.

Special Remarks on other Toxic Effects on Humans:
Acute Potential Health Effects:
Skin: May cause skin irritation by mechanical action. May get mechanical injury or embedding of chips/particles in skin. The particles that are embedded in the wounds may retard healing.
Eyes: May cause eye irritation by mechanical action. Mechanical injury may occur. Particles or chips may embed in eye and retard healing.
Inhalation: Low hazard for ususal industrial handling. It may cause respiratory tract irritation. However, it is unlikely due to physical form. When Magnesium metal is heated during welding or smelting process, Metal Fume Fever may result from inhalation of magnesium fumes. Metal Fume Fever is a flu-like condition consisting of fever, chills, sweating, aches, pains, cough, weakness, headache, nausea, vomiting, and breathing difficulty. Other symptoms may include metallic taste, increased white blood cell count. There is no permanent ill-effect.
Ingestion: Low hazard for usual industrial handling. There are no known reports of serious industrial poisonings with Magnesium. Ingeston of large amounts of chips, turnings or ribbons may cause gastrointestinal tract irritation with nausea, vomiting, and diarrhea. Acute ingestion may also result in Hypermagnesia. Hypermagnesia may cause hypotension, bradycardia, CNS depression, respiratory depression, and impairment of neuromuscular transmission (hyporeflexia, paralysis).

Section 12: Ecological Information

Ecotoxicity: Not available.

BOD5 and COD: Not available.

Products of Biodegradation:
Possibly hazardous short term degradation products are not likely. However, long term degradation products may arise.

Toxicity of the Products of Biodegradation: The product itself and its products of degradation are not toxic.

Special Remarks on the Products of Biodegradation: Not available.

Section 13: Disposal Considerations

Waste Disposal:
Waste must be disposed of in accordance with federal, state and local environmental control regulations.

Section 14: Transport Information

DOT Classification: CLASS 4.1: Flammable solid.

Identification: : Magnesium UNNA: 1869 PG: III

Special Provisions for Transport: Not available.

Section 15: Other Regulatory Information

Federal and State Regulations:
Connecticut hazardous material survey.: Magnesium
Rhode Island RTK hazardous substances: Magnesium
Pennsylvania RTK: Magnesium

Massachusetts RTK: Magnesium
Massachusetts spill list: Magnesium
New Jersey: Magnesium
TSCA 8(b) inventory: Magnesium

Other Regulations:
OSHA: Hazardous by definition of Hazard Communication Standard (29 CFR 1910.1200).
EINECS: This product is on the European Inventory of Existing Commercial Chemical Substances.

Other Classifications:

WHMIS (Canada):
CLASS B-4: Flammable solid.
CLASS B-6: Reactive and very flammable material.

DSCL (EEC):
R11- Highly flammable.
R15- Contact with water liberates extremely flammable gases.
S7/8- Keep container tightly closed and dry.
S43- In case of fire, use dry chemical. Never use water.

HMIS (U.S.A.):

Health Hazard: 1

Fire Hazard: 3

Reactivity: 2

Personal Protection: E

National Fire Protection Association (U.S.A.):

Health: 0

Flammability: 1

Reactivity: 1

Specific hazard:

Protective Equipment:
Gloves.
Lab coat.
Dust respirator. Be sure to use an approved/certified respirator or equivalent. Wear appropriate respirator when ventilation is inadequate.
Safety glasses.

Section 16: Other Information

References: Not available.

Other Special Considerations: Not available.

Created: 10/09/2005 06:00 PM

Last Updated: 11/06/2008 12:00 PM

The information above is believed to be accurate and represents the best information currently available to us. However, we make no warranty of merchantability or any other warranty, express or implied, with respect to such information, and we assume no liability resulting from its use. Users should make their own investigations to determine the suitability of the information for their particular purposes. In no event shall ScienceLab.com be liable for any claims, losses, or damages of any third party or for lost profits or any special, indirect, incidental, consequential or exemplary damages, howsoever arising, even if ScienceLab.com has been advised of the possibility of such damages.

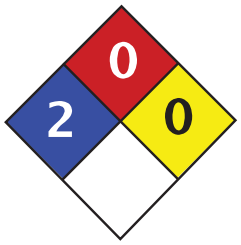

Health	2
Fire	0
Reactivity	0
Personal Protection	E

Material Safety Data Sheet
Nickel metal MSDS

Section 1: Chemical Product and Company Identification

Product Name: Nickel metal

Catalog Codes: SLN2296, SLN1342, SLN1954

CAS#: 7440-02-0

RTECS: QR5950000

TSCA: TSCA 8(b) inventory: Nickel metal

CI#: Not applicable.

Synonym: Nickel Metal shot; Nickel metal foil.

Chemical Name: Nickel

Chemical Formula: Ni

Contact Information:

Sciencelab.com, Inc.
14025 Smith Rd.
Houston, Texas 77396

US Sales: **1-800-901-7247**
International Sales: **1-281-441-4400**

Order Online: ScienceLab.com

CHEMTREC (24HR Emergency Telephone), call:
1-800-424-9300

International CHEMTREC, call: 1-703-527-3887

For non-emergency assistance, call: 1-281-441-4400

Section 2: Composition and Information on Ingredients

Composition:

Name	CAS #	% by Weight
Nickel metal	7440-02-0	100

Toxicological Data on Ingredients: Nickel metal LD50: Not available. LC50: Not available.

Section 3: Hazards Identification

Potential Acute Health Effects:
Hazardous in case of inhalation. Slightly hazardous in case of skin contact (irritant, sensitizer), of eye contact (irritant), of ingestion.

Potential Chronic Health Effects:
Slightly hazardous in case of skin contact (sensitizer), of ingestion, of inhalation (lung sensitizer).
CARCINOGENIC EFFECTS: Classified 2B (Possible for human.) by IARC. Classified 2 (Some evidence.) by NTP.
MUTAGENIC EFFECTS: Not available.
TERATOGENIC EFFECTS: Not available.
DEVELOPMENTAL TOXICITY: Not available.
The substance is toxic to skin.
The substance may be toxic to kidneys, lungs, liver, upper respiratory tract.
Repeated or prolonged exposure to the substance can produce target organs damage.

Section 4: First Aid Measures

Eye Contact:
Check for and remove any contact lenses. In case of contact, immediately flush eyes with plenty of water for at least 15 minutes. Get medical attention if irritation occurs.

Skin Contact:
In case of contact, immediately flush skin with plenty of water for at least 15 minutes while removing contaminated clothing and shoes. Cover the irritated skin with an emollient. Wash clothing before reuse. Thoroughly clean shoes before reuse. Get medical attention.

Serious Skin Contact: Not available.

Inhalation:
If inhaled, remove to fresh air. If not breathing, give artificial respiration. If breathing is difficult, give oxygen. Get medical attention.

Serious Inhalation: Not available.

Ingestion:
Do NOT induce vomiting unless directed to do so by medical personnel. Never give anything by mouth to an unconscious person. If large quantities of this material are swallowed, call a physician immediately. Loosen tight clothing such as a collar, tie, belt or waistband.

Serious Ingestion: Not available.

Section 5: Fire and Explosion Data

Flammability of the Product: Non-flammable.

Auto-Ignition Temperature: Not applicable.

Flash Points: Not applicable.

Flammable Limits: Not applicable.

Products of Combustion: Not available.

Fire Hazards in Presence of Various Substances: Not applicable.

Explosion Hazards in Presence of Various Substances:
Risks of explosion of the product in presence of mechanical impact: Not available.
Risks of explosion of the product in presence of static discharge: Not available.

Fire Fighting Media and Instructions:
Flammable solid.
SMALL FIRE: Use DRY chemical powder.
LARGE FIRE: Use water spray or fog. Cool containing vessels with water jet in order to prevent pressure build-up, autoignition or explosion.

Special Remarks on Fire Hazards: Material in powder form, capable of creating a dust explosion. This material is flammable in powder form only.

Special Remarks on Explosion Hazards:
Material in powder form, capable of creating a dust explosion.
Mixtures containing Potassium Perchlorate with Nickel & Titanium powders & infusorial earth can explode.
Adding 2 or 3 drops of approximately 90% peroxyformic acid to powdered nickel will result in explosion.
Powdered nickel reacts explosively upon contact with fused ammonium nitrate at temperatures below 200 deg. C.

Section 6: Accidental Release Measures

Small Spill:
Use appropriate tools to put the spilled solid in a convenient waste disposal container. Finish cleaning by spreading water on the contaminated surface and dispose of according to local and regional authority requirements.

Large Spill:
Use a shovel to put the material into a convenient waste disposal container. Finish cleaning by spreading water on the contaminated surface and allow to evacuate through the sanitary system. Be careful that the product is not present at a concentration level above TLV. Check TLV on the MSDS and with local authorities.

Section 7: Handling and Storage

Precautions:
Keep locked up.. Do not breathe dust. Wear suitable protective clothing. In case of insufficient ventilation, wear suitable respiratory equipment. If you feel unwell, seek medical attention and show the label when possible. Keep away from incompatibles such as oxidizing agents, combustible materials, metals, acids.

Storage: Keep container tightly closed. Keep container in a cool, well-ventilated area.

Section 8: Exposure Controls/Personal Protection

Engineering Controls:
Use process enclosures, local exhaust ventilation, or other engineering controls to keep airborne levels below recommended exposure limits. If user operations generate dust, fume or mist, use ventilation to keep exposure to airborne contaminants below the exposure limit.

Personal Protection: Safety glasses. Lab coat. Dust respirator. Be sure to use an approved/certified respirator or equivalent. Gloves.

Personal Protection in Case of a Large Spill:
Splash goggles. Full suit. Dust respirator. Boots. Gloves. A self contained breathing apparatus should be used to avoid inhalation of the product. Suggested protective clothing might not be sufficient; consult a specialist BEFORE handling this product.

Exposure Limits:
TWA: 1 (mg/m3) from ACGIH (TLV) [United States] Inhalation Respirable.
TWA: 0.5 (mg/m3) [United Kingdom (UK)]
TWA: 1 (mg/m3) from OSHA (PEL) [United States] InhalationConsult local authorities for acceptable exposure limits.

Section 9: Physical and Chemical Properties

Physical state and appearance: Solid. (Metal solid. Lustrous solid.)

Odor: Odorless.

Taste: Not available.

Molecular Weight: 58.71 g/mole

Color: Silvery.

pH (1% soln/water): Not applicable.

Boiling Point: 2730°C (4946°F)

Melting Point: 1455°C (2651°F)

Critical Temperature: Not available.

Specific Gravity: Density: 8.908 (Water = 1)

Vapor Pressure: Not applicable.

Vapor Density: Not available.

Volatility: Not available.

Odor Threshold: Not available.

Water/Oil Dist. Coeff.: Not available.

Ionicity (in Water): Not available.

Dispersion Properties: Not available.

Solubility:
Insoluble in cold water, hot water.
Insoluble in Ammonia.
Soluble in dilute Nitric Acid.
Slightly soluble in Hydrochloric Acid, Sulfuric Acid.

Section 10: Stability and Reactivity Data

Stability: The product is stable.

Instability Temperature: Not available.

Conditions of Instability: Incompatible materials

Incompatibility with various substances: Reactive with oxidizing agents, combustible materials, metals, acids.

Corrosivity: Non-corrosive in presence of glass.

Special Remarks on Reactivity:
Incompatible with strong acids, selenium, sulfur, wood and other combustibles, nickel nitrate, aluminum, aluminum trichloride, ethylene, p-dioxan, hydrogen, methanol, non-metals, oxidants, sulfur compounds, aniline, hydrogen sulfide, flammable solvents, hydrazine, and metal powders (especially zinc, aluminum, and magnesium), ammonium nitrate, nitryl fluoride, bromine pentafluoride, potassium perchlorate + titanium powder + indusorial earth.

Special Remarks on Corrosivity: Not available.

Polymerization: Will not occur.

Section 11: Toxicological Information

Routes of Entry: Inhalation. Ingestion.

Toxicity to Animals:
LD50: Not available.
LC50: Not available.

Chronic Effects on Humans:
CARCINOGENIC EFFECTS: Classified 2B (Possible for human.) by IARC. Classified 2 (Some evidence.) by NTP.
Causes damage to the following organs: skin.
May cause damage to the following organs: kidneys, lungs, liver, upper respiratory tract.

Other Toxic Effects on Humans:

Hazardous in case of inhalation.
Slightly hazardous in case of skin contact (irritant, sensitizer), of ingestion.

Special Remarks on Toxicity to Animals:
Lowest Published Lethal Dose/Conc:
LDL [Rat] - Route: Oral; Dose: 5000 mg/kg
LDL [Guinea Pig] - Route: Oral; Dose: 5000 mg/kg

Special Remarks on Chronic Effects on Humans: May cause cancer based on animal test data

Special Remarks on other Toxic Effects on Humans:
Acute Potential Health Effects:
Skin: Nickel dust and fume can irritate skin.
Eyes: Nickel dust and fume can irritate eyes.
Inhalation: Inhalation of dust or fume may cause respiratory tract irritation with non-productive cough, hoarseness, sore throat, headache, vertigo, weakness, chest pain, followed by delayed effects, including tachypnea, dyspnea, and ARDS. Death due to ARDS has been reported following inhalation of high concentrations of respirable metallic nickel dust. Later effects may include pulmonary edema and fibrosis.
Ingestion: Metallic nickel is generally considered not to be acutely toxic if ingested. Ingestion may cause nausea, vomiting, abdominal , and diarrhea. Nickel may damage the kidneys(proteinuria), and may affect liver function. It may also affect behavior (somnolence), and cardiovascular system (increased cornary artery resistance, decreased myocardial contractility, myocardial damage, regional or general arteriolar or venus dilation).
Chronic Potential Health Effects:
Skin: May cause skin allergy. Nickel and nickel compounds are among the most common sensitizers inducing allergic contact dermatitis.
Inhalation: Chronic inhalation nickel dust or fume can cause chronic hypertrophic rhinitis, sinusitis, nasal polyps, perforation of the nasal septum, chronic pulmonary irritation, fibrosis, pulmonary edema, pulmonary eosinophilia, Pneumoconiosis, allergies (asthma-like allergy), and cancer of the nasal sinus cavities, lungs, and possibly other organs. Future exposures can cause asthma attacks with shortness of breath, wheezing, cough, and/or chest tightness. Chronic inhalation of nickel dust or fume may also affect the liver (impaired liver function tests), and blood (changes in red blood cell count).
Ingestion: Prolonged or repeated ingestion of nickel can be a source chronic urticaria and other signs of allergy. Chronic ingestion of NIckel may also affect respiration and cause pneumoconiosis or fibrosis.
Note: In the general population, sensitization occurs from exposure to nickel-containing coins, jewelry, watches,

Section 12: Ecological Information

Ecotoxicity: Not available.

BOD5 and COD: Not available.

Products of Biodegradation:
Possibly hazardous short term degradation products are not likely. However, long term degradation products may arise.

Toxicity of the Products of Biodegradation: The products of degradation are as toxic as the original product.

Special Remarks on the Products of Biodegradation: Not available.

Section 13: Disposal Considerations

Waste Disposal:
Waste must be disposed of in accordance with federal, state and local environmental control regulations.

Section 14: Transport Information

DOT Classification: Not a DOT controlled material (United States).

Identification: Not applicable.

Special Provisions for Transport: Not applicable.

Section 15: Other Regulatory Information

Federal and State Regulations:
California prop. 65: This product contains the following ingredients for which the State of California has found to cause cancer, birth defects or other reproductive harm, which would require a warning under the statute: Nickel metal
California prop. 65: This product contains the following ingredients for which the State of California has found to cause cancer which would require a warning under the statute: Nickel metal
Connecticut hazardous material survey.: Nickel metal
Illinois toxic substances disclosure to employee act: Nickel metal
Illinois chemical safety act: Nickel metal
New York release reporting list: Nickel metal
Rhode Island RTK hazardous substances: Nickel metal
Pennsylvania RTK: Nickel metal
Michigan critical material: Nickel metal
Massachusetts RTK: Nickel metal
Massachusetts spill list: Nickel metal
New Jersey: Nickel metal
New Jersey spill list: Nickel metal
Louisiana spill reporting: Nickel metal
California Director's List of Hazardous Substances: Nickel metal
TSCA 8(b) inventory: Nickel metal

Other Regulations:
OSHA: Hazardous by definition of Hazard Communication Standard (29 CFR 1910.1200).
EINECS: This product is on the European Inventory of Existing Commercial Chemical Substances.

Other Classifications:

WHMIS (Canada): CLASS D-2A: Material causing other toxic effects (VERY TOXIC).

DSCL (EEC):
R40- Possible risks of irreversible effects.
R43- May cause sensitization by skin contact.
S22- Do not breathe dust.
S36- Wear suitable protective clothing.

HMIS (U.S.A.):

Health Hazard: 2

Fire Hazard: 0

Reactivity: 0

Personal Protection: E

National Fire Protection Association (U.S.A.):

Health: 2

Flammability: 0

Reactivity: 0

Specific hazard:

Protective Equipment:
Gloves.
Lab coat.
Dust respirator. Be sure to use an approved/certified respirator or equivalent. Wear appropriate respirator when ventilation is inadequate.
Safety glasses.

Section 16: Other Information

References: Not available.

Other Special Considerations: Not available.

Created: 10/10/2005 08:42 PM

Last Updated: 11/06/2008 12:00 PM

The information above is believed to be accurate and represents the best information currently available to us. However, we make no warranty of merchantability or any other warranty, express or implied, with respect to such information, and we assume no liability resulting from its use. Users should make their own investigations to determine the suitability of the information for their particular purposes. In no event shall ScienceLab.com be liable for any claims, losses, or damages of any third party or for lost profits or any special, indirect, incidental, consequential or exemplary damages, howsoever arising, even if ScienceLab.com has been advised of the possibility of such damages.

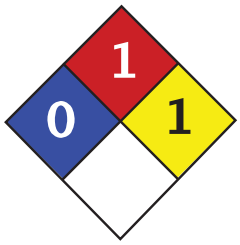

Health	1
Fire	1
Reactivity	1
Personal Protection	E

Material Safety Data Sheet
Zinc Metal MSDS

Section 1: Chemical Product and Company Identification

Product Name: Zinc Metal

Catalog Codes: SLZ1054, SLZ1159, SLZ1267, SLZ1099, SLZ1204

CAS#: 7440-66-6

RTECS: ZG8600000

TSCA: TSCA 8(b) inventory: Zinc Metal

CI#: Not applicable.

Synonym: Zinc Metal Sheets; Zinc Metal Shot; Zinc Metal Strips

Chemical Name: Zinc Metal

Chemical Formula: Zn

Contact Information:

Sciencelab.com, Inc.
14025 Smith Rd.
Houston, Texas 77396

US Sales: **1-800-901-7247**
International Sales: **1-281-441-4400**

Order Online: ScienceLab.com

CHEMTREC (24HR Emergency Telephone), call: 1-800-424-9300

International CHEMTREC, call: 1-703-527-3887

For non-emergency assistance, call: 1-281-441-4400

Section 2: Composition and Information on Ingredients

Composition:

Name	CAS #	% by Weight
Zinc Metal	7440-66-6	100

Toxicological Data on Ingredients: Zinc Metal LD50: Not available. LC50: Not available.

Section 3: Hazards Identification

Potential Acute Health Effects: Slightly hazardous in case of skin contact (irritant), of eye contact (irritant), of ingestion, of inhalation.

Potential Chronic Health Effects:
CARCINOGENIC EFFECTS: Not available.
MUTAGENIC EFFECTS: Not available.
TERATOGENIC EFFECTS: Not available.
DEVELOPMENTAL TOXICITY: Not available.
Repeated or prolonged exposure is not known to aggravate medical condition.

Section 4: First Aid Measures

Eye Contact:
Check for and remove any contact lenses. In case of contact, immediately flush eyes with plenty of water for at least 15 minutes. Get medical attention if irritation occurs.

Skin Contact: Wash with soap and water. Cover the irritated skin with an emollient. Get medical attention if irritation develops.

Serious Skin Contact: Not available.

Inhalation:
If inhaled, remove to fresh air. If not breathing, give artificial respiration. If breathing is difficult, give oxygen. Get medical attention.

Serious Inhalation: Not available.

Ingestion:
Do NOT induce vomiting unless directed to do so by medical personnel. Never give anything by mouth to an unconscious person. If large quantities of this material are swallowed, call a physician immediately. Loosen tight clothing such as a collar, tie, belt or waistband.

Serious Ingestion: Not available.

Section 5: Fire and Explosion Data

Flammability of the Product: Flammable.

Auto-Ignition Temperature: 480°C (896°F)

Flash Points: Not available.

Flammable Limits: Not available.

Products of Combustion: Not available.

Fire Hazards in Presence of Various Substances:
Slightly flammable to flammable in presence of open flames and sparks, of heat, of oxidizing materials, of acids, of alkalis, of moisture.
Non-flammable in presence of shocks.

Explosion Hazards in Presence of Various Substances:
Risks of explosion of the product in presence of mechanical impact: Not available.
Risks of explosion of the product in presence of static discharge: Not available.

Fire Fighting Media and Instructions:
Flammable solid.
SMALL FIRE: Use DRY chemical powder.
LARGE FIRE: Use water spray or fog. Cool containing vessels with water jet in order to prevent pressure build-up, autoignition or explosion.

Special Remarks on Fire Hazards:
Zinc + NaOH causes ignition.
Oxidation of zinc by potassium proceeds with incandescence.
Residues from zinc dust /acetic acid reduction operations may ignite after long delay if discarded into waste bins with paper.
Incandescent reaction when Zinc and Arsenic or Tellurium, or Selenium are combined.
When hydrazine mononitrate is heated in contact with zinc, a flamming decomposition occurs at temperatures a little above its melting point.
Contact with acids and alkali hydroxides (sodium hydroxide, postasium hydroxide, calcium hydroxide, etc.) results in evolution of hydrogen with sufficient heat of reaction to ignite the hydrogen gas.
Zinc foil ignites if traces of moisture are present.
It is water reactive and produces flammable gases on contact with water. It may ignite on contact with water or

moist air.

Special Remarks on Explosion Hazards: Not available.

Section 6: Accidental Release Measures

Small Spill:
Use appropriate tools to put the spilled solid in a convenient waste disposal container. Finish cleaning by spreading water on the contaminated surface and dispose of according to local and regional authority requirements.

Large Spill:
Flammable solid that, in contact with water, emits flammable gases.
Stop leak if without risk. Do not get water inside container. Do not touch spilled material. Cover with dry earth, sand or other non-combustible material. Prevent entry into sewers, basements or confined areas; dike if needed. Eliminate all ignition sources. Call for assistance on disposal. Finish cleaning by spreading water on the contaminated surface and allow to evacuate through the sanitary system.

Section 7: Handling and Storage

Precautions:
Keep away from heat. Keep away from sources of ignition. Ground all equipment containing material. Do not breathe dust. Keep away from incompatibles such as oxidizing agents, acids, alkalis, moisture.

Storage:
Keep container tightly closed. Keep container in a cool, well-ventilated area. Keep from any possible contact with water. Do not allow water to get into container because of violent reaction.

Section 8: Exposure Controls/Personal Protection

Engineering Controls:
Use process enclosures, local exhaust ventilation, or other engineering controls to keep airborne levels below recommended exposure limits. If user operations generate dust, fume or mist, use ventilation to keep exposure to airborne contaminants below the exposure limit.

Personal Protection: Safety glasses. Lab coat. Dust respirator. Be sure to use an approved/certified respirator or equivalent. Gloves.

Personal Protection in Case of a Large Spill:
Splash goggles. Full suit. Dust respirator. Boots. Gloves. A self contained breathing apparatus should be used to avoid inhalation of the product. Suggested protective clothing might not be sufficient; consult a specialist BEFORE handling this product.

Exposure Limits: Not available.

Section 9: Physical and Chemical Properties

Physical state and appearance: Solid. (Lustrous solid. Metal solid.)

Odor: Not available.

Taste: Not available.

Molecular Weight: 65.39 g/mole

Color: Bluish-grey

pH (1% soln/water): Not applicable.

Boiling Point: 907°C (1664.6°F)

Melting Point: 419°C (786.2°F)

Critical Temperature: Not available.

Specific Gravity: Not available.

Vapor Pressure: Not applicable.

Vapor Density: Not available.

Volatility: Not available.

Odor Threshold: Not available.

Water/Oil Dist. Coeff.: Not available.

Ionicity (in Water): Not available.

Dispersion Properties: Not available.

Solubility: Insoluble in cold water, hot water, methanol, diethyl ether, n-octanol, acetone.

Section 10: Stability and Reactivity Data

Stability: The product is stable.

Instability Temperature: Not available.

Conditions of Instability: Excess heat, incompatible materials, moisture

Incompatibility with various substances:
Reactive with oxidizing agents, acids, alkalis.
Slightly reactive to reactive with moisture.
The product may react violently with water to emit flammable but non toxic gases.

Corrosivity: Non-corrosive in presence of glass.

Special Remarks on Reactivity:
Incompatible with acids, halogenated hydrocarbons, NH_4NO_3, barium oxide, $Ba(NO_3)_2$, Cadmium, CS_2, chlorates, Cl_2, CrO_3, F_2, Hydroxylamine, $Pb(N_3)_2$, $MnCl_2$, HNO_3, performic acid, $KClO_3$, KNO_3, N_2O_2, Selenium, $NaClO_3$, Na_2O_2, Sulfur, Te, water, $(NH_4)_2S$, As_2O_3, CS_2, $CaCl_2$, chlorinated rubber, catalytic metals, halocarbons, o-nitroanisole, nitrobenzene, nonmetals, oxidants, paint primer base, pentacarbonoyliron, transition metal halides, seleninyl bromide, HCl, H_2SO_4, (Mg +$Ba(NO_3)_2$ +BaO_2), (ethyl acetoacetate +tribromoneopentyl alcohol.
Contact with Alkali Hydroxides(Sodium Hydroxide, Potassium Hydroxide, Calcium Hydroxide, etc) results in evolution of hydrogen.
Ammonium nitrate + zinc + water causes a violent reaction with evolution of steam and zinc oxide.
May react with water.

Special Remarks on Corrosivity: Not available.

Polymerization: Will not occur.

Section 11: Toxicological Information

Routes of Entry: Inhalation. Ingestion.

Toxicity to Animals:

LD50: Not available.
LC50: Not available.

Chronic Effects on Humans: Not available.

Other Toxic Effects on Humans: Slightly hazardous in case of skin contact (irritant), of ingestion, of inhalation.

Special Remarks on Toxicity to Animals: Not available.

Special Remarks on Chronic Effects on Humans: Not available.

Special Remarks on other Toxic Effects on Humans:
Acute Potential Health Effects:
Skin: May cause skin irritation. Dermal exposure to zinc may produce leg pains, fatigue, anorexia and weight loss.
Eyes: May cause eye irritation.
Ingestion: May be harmul if swallowed. May cause digestive tract irritation with tightness in throat, nausea, vomiting, diarrhea, loss of appetite, malaise, abdominal pain. fever, and chills. May affect behavior/central nervous system and autonomic nervous system with ataxia, lethargy, staggering gait, mild derrangement in cerebellar function, lightheadness, dizzness, irritability, muscular stiffness, and pain. May also affect blood.
Inhalation: Inhalation of zinc dust or fumes may cause respiratory tract and mucous membrane irritation with cough and chest pain. It can also cause "metal fume fever", a flu-like condition characterized appearance of chills, headached fever, maliase, fatigue, sweating, extreme thirst, aches in the legs and chest, and difficulty in breathing. A sweet taste may also be be present in metal fume fever, as well as a dry throat, aches, nausea, and vomiting, and pale grey cyanosis.
The toxicological properties of this substance have not been fully investisgated.

Section 12: Ecological Information

Ecotoxicity: Not available.

BOD5 and COD: Not available.

Products of Biodegradation:
Possibly hazardous short term degradation products are not likely. However, long term degradation products may arise.

Toxicity of the Products of Biodegradation: Not available.

Special Remarks on the Products of Biodegradation: Not available.

Section 13: Disposal Considerations

Waste Disposal:
Waste must be disposed of in accordance with federal, state and local environmental control regulations.

Section 14: Transport Information

DOT Classification: Not a DOT controlled material (United States).

Identification: Not applicable.

Special Provisions for Transport: Not applicable.

Section 15: Other Regulatory Information

Federal and State Regulations:

New York release reporting list: Zinc Metal
Rhode Island RTK hazardous substances: Zinc Metal
Pennsylvania RTK: Zinc Metal
Florida: Zinc Metal
Michigan critical material: Zinc Metal
Massachusetts RTK: Zinc Metal
New Jersey: Zinc Metal
California Director's List of Hazardous Substances: Zinc Metal
TSCA 8(b) inventory: Zinc Metal
TSCA 12(b) one time export: Zinc Metal
SARA 313 toxic chemical notification and release reporting: Zinc Metal
CERCLA: Hazardous substances.: Zinc Metal: 1000 lbs. (453.6 kg)

Other Regulations: EINECS: This product is on the European Inventory of Existing Commercial Chemical Substances.

Other Classifications:

WHMIS (Canada): Not Available

DSCL (EEC):
R15- Contact with water liberates
extremely flammable gases.
R17- Spontaneously flammable in air.
S7/8- Keep container tightly closed and dry.

HMIS (U.S.A.):

Health Hazard: 1

Fire Hazard: 1

Reactivity: 1

Personal Protection: E

National Fire Protection Association (U.S.A.):

Health: 0

Flammability: 1

Reactivity: 1

Specific hazard:

Protective Equipment:
Gloves.
Lab coat.
Dust respirator. Be sure to use an
approved/certified respirator or
equivalent.
Safety glasses.

Section 16: Other Information

References: Not available.

Other Special Considerations: Not available.

Created: 10/10/2005 12:18 AM

Last Updated: 11/06/2008 12:00 PM

The information above is believed to be accurate and represents the best information currently available to us. However, we make no warranty of merchantability or any other warranty, express or implied, with respect to such information, and we assume no liability resulting from its use. Users should make their own investigations to determine the suitability of the information for their particular purposes. In no event shall ScienceLab.com be liable for any claims, losses, or damages of any third party or for lost profits or any special, indirect, incidental, consequential or exemplary damages, howsoever arising, even if ScienceLab.com has been advised of the possibility of such damages.

ATSDR Department of Health and Human Services Agency for Toxic Substances & Disease Registry

ToxFAQs™: Chemical Agent Briefing Sheets (CABS)

Lead

Email this page
Printer-friendly version

January 2006

PDF Version

- What is lead?
- What are the forms of lead?
- What are the common uses of lead?
- What are the routes of exposure for lead?
- Who are the populations most at risk and how are they usually exposed?
- What are the possible toxic effects of lead?
- How can I reduce the risk of exposure to lead?
- What are the safety guidelines for lead exposure?
- What are the most important or common mediating factors?
- Is there a test to see if my child or I have been exposed to lead?
- Future Research Needs
- For more information

What is lead?

Lead is a heavy, bluish-gray metal that has a low melting point. It occurs naturally in the Earth's crust, but it is not a particularly abundant element. It is rarely found naturally as a metal, but rather in its divalent (2+) oxidative state in ore deposits widely distributed throughout the world. The most important lead containing ores are galena (PbS), anglesite ($PbSO_4$), and cerussite ($PbCO_3$). Natural lead is a mixture of four stable isotopes: ^{208}Pb (51%–53%), ^{206}Pb (23.5%–27%), ^{207}Pb (20.5%–23%), and ^{204}Pb (1.35%–1.5%).

What are the forms of lead?

- Metallic lead
- Inorganic lead and lead compounds (or lead salts)
- Organic lead (containing carbon)

What are the common uses of lead?

The largest use for lead is in storage batteries in cars and other vehicles. Lead may be used as a pure metal, alloyed with other metals, or as chemical compounds.

Lead used by industry comes from mined ores ("primary") or from recycled scrap metal or batteries ("secondary"). However, most lead today is obtained from recovery of recycled scrap, mostly lead-acid batteries.

Human activities, such as lead mining and smelting operations and manufacturing and use of lead products (*e.g.*, leaded gasoline, lead-based paint), have resulted in the contamination of many industrial and residential areas with lead.

Form	Uses
Metallic lead	Certain uses of lead, such as leaded gasoline, lead-based paints for domestic use, lead-based solder in food cans and water pipes, lead sinkers, and ammunition, have been reduced or banned to minimize lead's harmful effects on people and animals.
Lead and lead compounds (or lead salts), such as • **lead acetate** • **lead chloride** • **lead nitrate** • **lead oxide** • **lead phosphate** • **lead acetate**	• **Cosmetics and hair dye** - Some hair dyes and some non-Western cosmetics, such as kohl and surma, contain lead. • **Fishing equipment** - Most fishing weights and sinkers are made from lead. • **Folk remedies** - Many non-Western folk remedies used to treat diarrhea or other ailments may contain substantial amounts of lead. Examples of these include alarcon, ghasard, alkohl, greta, azarcon,

• **lead sulfate** • **lead sulfide**	liga, bali goli, pay-loo-ah, coral, and rueda. • **Glazing** - Applied to some ceramicware can contain lead. • **Lead based paint** - Although the sale of residential lead-based paint was banned in the United States in 1978, it remains a major source of lead exposure for young children residing in older houses. • **Lead batteries** - Production of lead-acid batteries is the major use of lead. • **Lead-based solder** - Has been banned for use in water distribution systems, but many buildings and homes contain lead pipes or lead-based solder. Lead-based solder also is used for electrical circuitry applications. • **Lead-shot** and **ammunition** - It is the second highest production use of lead. • Other uses of lead include the production of lead alloys, soldering materials, shielding for x-ray machines, and manufacturing of corrosion- and acid-resistant materials used in the building industry.
Organic • **tetraethyl lead** • **tetramethyl lead**	The use of lead in gasoline was phased out in the 1980s, and has been banned since January 1, 1996. The use of lead in gasoline has contributed to its dispersion throughout the environment. During the combustion of gasoline containing these alkyllead compounds, significant amounts of inorganic lead can be released to the surrounding areas. **Current Uses** • Gasoline for off-road vehicles, farm equipment, and airplanes **Past Uses** • Gasoline additives (to increase octane rating)

What are the routes of exposure for lead?

People are most likely to be exposed to lead by consuming contaminated food and drinking water. Exposure can also occur by inadvertently ingesting contaminated soil, dust, or lead-based paint.

Form	Routes of Exposure
Metallic lead **Lead and lead compounds (or lead salts), such as** • **lead acetate** • **lead chloride** • **lead nitrate** • **lead oxide** • **lead phosphate** • **lead subacetate** • **lead sulfate** • **lead sulfide**	• Ingestion is the primary source of exposure to the general population. • Lead paint is a major source of environmental exposure for children who ingest flaking paint, paint chips, and weathered powdered paint (mostly from deteriorated housing units in urban areas). Lead paint can also contribute to soil/dust lead which can be inadvertently ingested via hand-to-mouth activity of young children. • Lead can leach into drinking water from lead-based solder used in water pipes. • Lead can leach into foods or liquids stored in ceramic containers made with lead glazing. • Engaging in hobbies such as casting ammunition, making fishing weights, and stained glass can result in exposure to lead. • Exposure by inhalation can result during activities such as soldering with lead solder or sanding or sandblasting lead-based paint.
Organic • **tetraethyl lead** • **tetramethyl lead**	• Inhalation • Dermal studies in animals have shown that organic lead is well absorbed through the skin

Who are the populations most at risk and how are they usually exposed?

People living near hazardous waste sites, lead smelters or refineries, battery recycling or crushi ng centers, or other industrial lead sources may be exposed to lead and chemicals that contain lead. Workers in occupations that have sources of lead exposure (*e.g.*, plumbers, miners, mechanics, and lead smelter or refinery workers).

Certain hobbies, folk remedies, home activities, and car repairs (*e.g.*, radiator repair) can contribute to lead exposure. Smoking cigarettes or breathing second-hand smoke increases exposure because tobacco smoke contains small amounts of lead.

Pregnant women, the developing fetuses, and young children are particularly vulnerable to the effe cts of lead. Young children are more likely to play in dirt and to place their hands and other objects in their

mouths, thereby increasing the opportunity for exposure via ingestion of lead-contaminated soil an d dust.

What are the possible toxic effects of lead?

The most sensitive targets for lead toxicity are the developing nervous system, the hematological and cardiovascular systems, and the kidney. However, because of lead's many modes of action in biologi cal systems, lead could potentially affect any system or organs in the body. The effects are the same whether it is breathed or swallowed.

Blood Lead Concentrations Corresponding to Adverse Health Effects

Life Stage	Effect	Blood lead (µg/dL)
Children	Depressed ALAD* activity	<5
	Neurodevelopmental effects	<10
	Sexual maturation	<10
	Depressed vitamin D	>15
	Elevated EP**	>15
	Depressed NCV***	>30
	Depressed hemoglobin	>40
	Colic	>60
Adults	Depressed GFR****	<10
	Elevated blood pressure	<10
	Elevated EP (females)	>20
	Enzymuria/proteinuria	>30
	Peripheral neuropathy	>40
	Neurobehavioral effects	>40
	Altered thyroid hormone	>40
	Reduced fertility	>40
	Depressed hemoglobin	>50
Elderly adults	Depressed ALAD*	<5
	Neurobehavioral effects	>4

*aminolevulinic acid dehydratase (ALAD)

**erythrocyte porphyrin (EP)

***nerve conduction velocity (NCV)

****glomerular filtration rate (GFR)

Source: ATSDR Toxicological Profile for Lead (Draft for Public Comment), 2005.

How can I reduce the risk of exposure to lead?

- Do not allow children to chew or mouth surfaces that may have been painted with lead-based paint (homes built before 1978).
- If you have a water lead problem, the U.S. Environmental Protection Agency (EPA) recommends that you flush your cold water pipes if they have not been used in over 6 hours by running water until it is cold (5 seconds to 2 minutes) before drinking or cooking with it.
- Avoid some types of paints and pigments that contain lead and are used as make-up or hair coloring; keep these kinds of products away from children.
- Hire a professional contractor, who is required to follow certain health safety requirements for remediation or renovation involving lead-based paint, (www.epa.gov/lead/pubs/leadinfo.htm#remodeling).
- Wash children's hands and faces often to remove lead dusts and soil, and regularly clean the house of dust and tracked in soil.

What are the safety guidelines for lead exposure?

Air

- National Institute for Occupational Safety and Health (NIOSH)

  Recommended exposure limit (REL) time-weighted average (TWA) - 0.05 mg/m^3
  Immediately dangerous to life or health (IDLH) - 100 mg/m^3

- Occupational Safety and Health Administration (OSHA)

  Air - workplace 50 $\mu g/m^3$
  Action level - 40 µg/100 g of whole blood

- The American Conference of Governmental Industrial Hygienists (ACGIH)

Threshold limit values (TLV)/(TWA) - 0.05 mg/m^3
TLV/TWA guideline for lead arsenate - 150 µg/m^3
TLV/TWA guideline for other forms of lead - 50 µg lead/m^3

- U.S. Environmental Protection Agency (EPA)

  National Primary and Secondary Ambient Air Quality Standards - 1.5 µg/m^3

- World Health Organization (WHO)

  Air quality guidelines -- 0.5 µg/m^3

Water

- EPA

  Maximum contaminant level (MCL) - action level 0.015 mg/L
  Action level for public supplies - 15 µg/L

- WHO

  Drinking Water Quality Guidelines - 0.01 mg/L

Blood

- Centers for Disease Control and Prevention (CDC)

  Level of concern for children - 10 µg/dL

- OSHA

  Cause for written notification and medical exam - 40 µg/dL
  Cause for medical removal from exposure - 50 µg/dL

- ACGIH

  Advisory; biological exposure index - 30 µg/dL

Food

- Food and Drug Administration (FDA)

  Bottled drinking water - 0.005 mg/L

Other

- ACGIH

  Biological exposure indices (lead in blood) - 30 µg/100 mL

- Consumer Product Safety Commission

  Paint - 600 ppm

- FDA

  Ceramicware (µg/mL leaching solution) - 0.5-3.0 µg/mL

µg/m^3: micrograms per cubic meter
µg/dL: micrograms per deciliter
µg/L: micrograms per liter
g: gram
mg/L: milligrams per liter
mL: milliliter
ppm: parts per million

What are the most important or common mediating factors?

Factors that determine the severity of the health effects from lead exposure include

- Dose
- Age of the person exposed
  - the developing nervous system is the most sensitive system to the effects of lead
  - the efficiency of lead absorption from the gastrointestinal tract is greater in children than in adults
- Life stages of women (childbirth, lactating, menopause)
- Occupational exposures
- Duration of exposure
- Health and lifestyle of the person exposed
- Nutritional status of the person exposed
  - a diet adequate in calcium and iron may decrease lead absorption

The toxic effects of lead exposure may be worse in individuals with inherited genetic diseases or gene polymorphisms such as thalassemia, individuals with glucose-6-phosphate dehydrogenase (G6PD) deficiency, and carriers of certain gene polymorphic forms (*e.g.*, ALAD and vitamin D receptor). Research continues about this topic.

Is there a test to see if my child or I have been exposed to lead?

Blood	• The screening test of choice is blood lead levels. • Blood tests are commonly used to screen children for lead poisoning. • Analysis of lead in whole blood is the most common and accurate method of assessing lead exposure. • Exposure to lead also can be evaluated by measuring erythrocyte protoporphyrin (EP) in blood samples. EP is a part of red blood cells known to increase when the amount of lead in the blood is high. However, the EP level is not sensitive enough to identify children with elevated blood lead levels below about 25 micrograms per deciliter (µg/dL).
Bone and Teeth	• X-ray fluorescence techniques have been used to determine lead concentration in bones and teeth. It is not widely available and is used mostly in research. • Lead partitions to bone over a lifetime of exposure; therefore, bone lead measurements may be a better indicator of cumulative exposure than blood lead.
Urine	• Measurements of urinary lead levels have been used to assess lead exposure. • The measurement of lead excreted in urine following chelation with calcium disodium EDTA (EDTA provocation) has been used to detect elevated body burden of lead in adults and children.
Hair and Nails	• These are not reliable for testing due to errors external contamination. They are relatively poor predictors of blood lead, particularly at low concentrations.

Future Research Needs

To close current gaps in the scientific database on the health effects of lead, a long–term resear ch program is needed that might include the following:

- Further short-term studies or studies in vitro designed to clarify mechanisms of action for the various toxicities might be useful.
- Studies identifying exposures during different developmental periods can help identify critical periods of vulnerability for immunocompetence, development of sex organs, or neurobehavioral parameters.
- Chronic-duration exposure studies in animals would expand information on the toxicity of lead. Special studies that examine biochemical and morphological effects of lead may provide new information on mechanisms of action of lead, particularly for the effects of greatest concern such as neurobehavioral changes in children.
- Development of new and more sensitive tests of specific neuropsychological functions.
- Further investigation of links between lead and amyotrophic lateral sclerosis, essential tremor, schizophrenia, and Parkinson's disease.
- Epidemiological studies designed in a manner that permits more rigorous assessments of effect modification.
- Studies about the long-term consequences of lead-related neurobehavioral deficits detected in infants and children and the manifestation of chronic neurobehavioral problems in adolescence and adulthood.
- Further characterization of bone lead concentration as a biomarker of exposure for various effect end points (*e.g.*, blood pressure and renal effects).
- Studies of the potential prevalence of elevated bone lead stores in women of reproductive age and the associated risk that this poses to fetal development by mobilization of maternal bone stores during pregnancy.
- Further clarification of the role of some genetic polymorphisms.
- Evaluation of cohorts from prospective studies into adulthood for potential late-appearing effects including cancer.

For more information

- Agency for Toxic Substances and Disease Registry (ATSDR) Toxicological Profile for Lead

  http://www.atsdr.cdc.gov/toxprofiles/tp13.html

- ATSDR ToxFAQs™ for Lead

  http://www.atsdr.cdc.gov/tfacts13.html

- ATSDR Case Studies in Environmental Medicine Lead Toxicity

  http://www.atsdr.cdc.gov/csem/lead/

- ATSDR Interaction Profile for Chemical Mixtures for Arsenic, Cadmium, Chromium, and Lead

  http://www.atsdr.cdc.gov/interactionprofiles/ip04.html

- ATSDR Interaction Profile for Chemical Mixtures for Lead, Manganese, Zinc, and Copper

  http://www.atsdr.cdc.gov/interactionprofiles/ip06.html

- ATSDR Interaction Profile for Chemical Mixtures for Chlorpyrifos, Lead, Mercury, and Methylmercury

  http://www.atsdr.cdc.gov/interactionprofiles/ip11.html

- Centers for Disease Control and Prevention Lead Web Page

  http://www.cdc.gov/lead/

- U.S. Environmental Protection Agency Lead Web Page

  http://www.epa.gov/lead/

- U.S. Department of Labor, Occupational Safety & Health Administration

  http://www.osha.gov/SLTC/lead/

For more information, contact:

Agency for Toxic Substances and Disease Registry
Division of Toxicology and Environmental Medicine
1600 Clifton Road NE, Mailstop F-32
Atlanta, GA 30333
Phone: 1-800-CDC-INFO (800-232-4636)
TTY 888-232-6348

FAX: (770)-488-4178
Email: CDCINFO@cdc.gov

This page was updated on 01/04/2008

Mercury

Mercury is a naturally occurring metal found in air, water, and soil. It exists in several forms, including elemental (or metallic) mercury, inorganic mercury compounds, and organic mercury compounds:

- **Elemental mercury** is liquid at room temperature and is used in thermometers, fluorescent light bulbs, some electrical switches, and some industrial processes.
- **Inorganic mercury** compounds are formed when mercury combines with other elements to form salts, which are usually powders or crystals. Inorganic mercury compounds are found naturally in the environment. Some forms of inorganic mercury have been used in antiseptic creams, ointments, and preservatives.
- **Organic mercury** compounds are formed when mercury combines with carbon. Microscopic organisms can produce organic mercury compounds (methylmercury) in contaminated water and soil, which can accumulate in the food chain. Other special types of organomercurials have been used as medical preservatives and medicines.

How People Are Exposed to Mercury

- Eating fish or shellfish that is contaminated with methylmercury, which is the main source of general human exposures to mercury;
- Breathing air contaminated with elemental mercury vapors (e.g., in workplaces such as dental offices and industries that use mercury or in locations where a mercury spill or release has occurred);
- Having dental fillings that contain mercury; and
- Practicing cultural or religious rituals that use mercury.

How Mercury Affects People's Health

- Short-term exposure to extremely high levels of elemental mercury vapors can result in lung damage, nausea, diarrhea, increases in blood pressure or heart rate, skin rashes, eye irritation, and injury to the nervous system.
- Prolonged exposure to lower levels of elemental mercury can permanently damage the brain and kidneys.
- The developing brain of a fetus can be injured if the mother is exposed to methylmercury.

Levels of Mercury in U.S. Population

Scientists tested levels of mercury in the blood of 16,780 participants who took part in CDC's national study known as the National Health and Nutrition Examination Survey (NHANES). These findings are based on total blood mercury levels in the U.S. general

population for persons aged 1 year and older who participated in NHANES during 2003-2006, as well as trends in the total mercury of children aged 1–5 and females aged 16–49 during 1999–2006.

- In the total population during 2003–2006, the total blood mercury levels for non–Hispanic blacks and non–Hispanic whites were higher than those for Mexican Americans.
- Across the age groups in the total population during 2003-2006, total blood mercury levels increased with age, peaked at the fifth or sixth decade, depending on race/ethnicity, and then declined.
- In the most recent survey period of 2005–2006, the 95th percentile levels for total blood mercury in children aged 1-5 years and females aged 16-49 years were 1.43 µg/L and 4.48 µg/L, respectively. The 95th percentile means that 95 percent of the U.S. population's exposure is below this estimated level. Conversely, only 5 percent of the population will have values at this level or higher.
- Over the four survey periods from 1999-2006, blood mercury levels increased slightly for non–Hispanic white children and decreased slightly for non–Hispanic black and Mexican American children. Female children had slightly higher blood mercury levels than male children.

For More Information

- Agency for Toxic Substances and Disease Registry
  Detailed information about mercury and public health is available at http://www.atsdr.cdc.gov/alerts/970626.html and http://www.atsdr.cdc.gov/cabs/mercury/index.html
- CDC Emergency Preparedness and Response
  Case definitions of mercury, toxicology FAQs, and toxicological profile at http://emergency.cdc.gov/agent/mercury/

May 2009

The Centers for Disease Control and Prevention (CDC) protects people's health and safety by preventing and controlling diseases and injuries; enhances health decisions by providing credible information on critical health issues; and promotes healthy living through strong partnerships with local, national, and international organizations.

Department of Health and Human Services
Agency for Toxic Substances & Disease Registry

ATSDR Home › ToxFAQs™ Arsenic

ToxFAQs™

ToxFAQs™
for
Arsenic
(*Arsénico*)
August 2007

PDF Version, 92 KB

CAS#: 7440-38-2

This fact sheet answers the most frequently asked health questions (FAQs) about arsenic. For more information, call the ATSDR Information Center at 1-800-232-4636. This fact sheet is one in a series of summaries about hazardous substances and their health effects. It is important you understand this information because this substance may harm you. The effects of exposure to any hazardous substance depend on the dose, the duration, how you are exposed, personal traits and habits, and whether other chemicals are present.

- Highlights
- What is arsenic?
- What happens to arsenic when it enters the environment?
- How might I be exposed to arsenic?
- How can arsenic affect my health?
- How likely is arsenic to cause cancer?
- How does arsenic affect children?
- How can families reduce their risk for exposure to arsenic?
- Is there a medical test to show whether I've been exposed to arsenic?
- Has the federal government made recommendations to protect human health?
- References
- Contact Information

Highlights

Exposure to higher than average levels of arsenic occur mostly in the workplace, near hazardous waste sites, or in areas with high natural levels. At high levels, inorganic arsenic can cause death. Exposure to lower levels for a long time can cause a discoloration of the skin and the appearance of small corns or warts. Arsenic has been found in at least 1,149 of the 1,684 National Priority List sites identified by the Environmental Protection Agency (EPA).

What is arsenic?

Arsenic is a naturally occurring element widely distributed in the earth's crust. In the environment, arsenic is combined with oxygen, chlorine, and sulfur to form inorganic arsenic compounds. Arsenic in animals and plants combines with carbon and hydrogen to form organic arsenic compounds.

Inorganic arsenic compounds are mainly used to preserve wood. Copper chromated arsenate (CCA) is used to make "pressure-treated" lumber. CCA is no longer used in the U.S. for residential uses; it is still used in industrial applications. Organic arsenic compounds are used as pesticides, primarily on cotton fields and orchards.

What happens to arsenic when it enters the environment?

- Arsenic occurs naturally in soil and minerals and may enter the air, water, and land from wind-blown dust and may get into water from runoff and leaching.
- Arsenic cannot be destroyed in the environment. It can only change its form.
- Rain and snow remove arsenic dust particles from the air.
- Many common arsenic compounds can dissolve in water. Most of the arsenic in water will ultimately end up in soil or sediment.
- Fish and shellfish can accumulate arsenic; most of this arsenic is in an organic form called arsenobetaine that is much less harmful.

How might I be exposed to arsenic?

- Ingesting small amounts present in your food and water or breathing air containing arsenic.
- Breathing sawdust or burning smoke from wood treated with arsenic.
- Living in areas with unusually high natural levels of arsenic in rock.
- Working in a job that involves arsenic production or use, such as copper or lead smelting, wood treating, or pesticide application.

How can arsenic affect my health?

Breathing high levels of inorganic arsenic can give you a sore throat or irritated lungs.

Ingesting very high levels of arsenic can result in death. Exposure to lower levels can cause naus ea and vomiting, decreased production of red and white blood cells, abnormal heart rhythm, damage to blood vessels, and a sensation of “pins an d needles” in hands and feet.

Ingesting or breathing low levels of inorganic arsenic for a long time can cause a darkening of th e skin and the appearance of small “corns” or “warts” on the palms, soles, and torso.

Skin contact with inorganic arsenic may cause redness and swelling.

Almost nothing is known regarding health effects of organic arsenic compounds in humans. Studies i n animals show that some simple organic arsenic compounds are less toxic than inorganic forms. Ingestion of methyl and dimethyl compounds can cause diarrhea and damage to the kidneys.

How likely is arsenic to cause cancer?

Several studies have shown that ingestion of inorganic arsenic can increase the risk of skin cance r and cancer in the liver, bladder, and lungs. Inhalation of inorganic arsenic can cause increased risk of lung cancer. The Department of Health and Human Services (DHHS) and the EPA have determined that inorganic arsenic is a known human carcinogen. The International Agency for R esearch on Cancer (IARC) has determined that inorganic arsenic is carcinogenic to humans.

How does arsenic affect children?

There is some evidence that long-term exposure to arsenic in children may result in lower IQ score s. There is also some evidence that exposure to arsenic in the womb and early childhood may increase mortality in young adults.

There is some evidence that inhaled or ingested arsenic can injure pregnant women or their unborn babies, although the studies are not definitive. Studies in animals show that large doses of arsenic that cause illness in pregnant fem ales, can also cause low birth weight, fetal malformations, and even fetal death. Arsenic can cross the placenta and has been found in fetal ti ssues. Arsenic is found at low levels in breast milk.

How can families reduce their risk for exposure to arsenic?

- If you use arsenic-treated wood in home projects, you should wear dust masks, gloves, and protecti ve clothing to decrease exposure to sawdust.
- If you live in an area with high levels of arsenic in water or soil, you should use cleaner source s of water and limit contact with soil.
- If you work in a job that may expose you to arsenic, be aware that you may carry arsenic home on y our clothing, skin, hair, or tools. Be sure to shower and change clothes before going home.

Is there a medical test to show whether I've been exposed to arsenic?

There are tests available to measure arsenic in your blood, urine, hair, and fingernails. The urin e test is the most reliable test for arsenic exposure within the last few days. Tests on hair and fingernails can measure exposure to high levels of ars enic over the past 6-12 months. These tests can determine if you have been exposed to above-average levels of arsenic. They cannot predict whether the arsenic levels in your body will affect your health.

Has the federal government made recommendations to protect human health?

The EPA has set limits on the amount of arsenic that industrial sources can release to the environ ment and has restricted or cancelled many of the uses of arsenic in pesticides. EPA has set a limit of 0.01 parts per million (ppm) for arsenic in drinking water.

The Occupational Safety and Health Administration (OSHA) has set a permissible exposure limit (PEL) of 10 micrograms of arsenic per cubic meter of workplace air (10 $\mu g/m^3$) for 8 hour shifts and 40 hour work weeks.

References

Agency for Toxic Substances and Disease Registry (ATSDR). 2007. Toxicological Profile for Arsenic *(Update)*. Atlanta, GA: U.S. Department of Health and Human Services, Public Health Service.

Where can I get more information?

For more information, contact:

Agency for Toxic Substances and Disease Registry
Division of Toxicology and Environmental Medicine
1600 Clifton Road NE, Mailstop F-62
Atlanta, GA 30333
Phone: 1-800-CDC-INFO • 888-232-6348 (TTY)
FAX: 770-488-4178
Email: cdcinfo@cdc.gov

ATSDR can tell you where to find occupational and environmental health clinics. Their specialists can recognize, evaluate, and treat illnesses resulting from exposure to hazardous substances. You can also contact your community or state heal th or environmental quality department if you have any more questions or concerns.

This page was updated on 10/05/2007

U.S. Environmental Protection Agency

Pesticides: Topical & Chemical Fact Sheets

Assessing Health Risks from Pesticides

January 1999
735-F-99-002

The Federal Government, in cooperation with the States, carefully regulates pesticides to ensure that they do not pose unreasonable risks to human health or the environment. As part of that effort, the Environmental Protection Agency (EPA) requires extensive test data from pesticide producers that demonstrate pesticide products can be used without posing harm to human health and the environment. EPA scientists and analysts carefully review these data to determine whether to register (license) a pesticide product or a use and whether specific restrictions are necessary. This fact sheet is a brief overview of EPA's process for assessing potential risks to human health when evaluating pesticide products.

Background

There are more than 865 active ingredients registered as pesticides, which are formulated into thousands of pesticide products that are available in the marketplace. About 350 pesticides are used on the foods we eat, and to protect our homes and pets.

EPA plays a critical role in evaluating these chemicals prior to registration, and in reevaluating older pesticides already on the market, to ensure that they can be used with a reasonable certainty of no harm. The process EPA uses for evaluating the health impacts of a pesticide is called risk assessment.

EPA uses the National Research Council's four-step process for human health risk assessment:

Step One: Hazard Identification
Step Two: Dose-Response Assessment
Step Three: Exposure Assessment
Step Four: Risk Characterization

Step One: Hazard Identification (Toxicology)

The first step in the risk assessment process is to identify potential health effects that may occur from different types of pesticide exposure. EPA considers the full spectrum of a pesticide's potential health effects.

Generally, for human health risk assessments, many toxicity studies are conducted on animals by pesticide companies in independent laboratories and evaluated for acceptability by EPA scientists. EPA evaluates pesticides for a wide range of adverse effects, from eye and skin irritation to cancer and birth defects in laboratory animals. EPA may also consult the public literature or other sources of supporting information on any aspect of the chemical.

Step Two: Dose-Response Assessment

Paracelsus, the Swiss physician and alchemist, the "father" of modern toxicology (1493-1541) said,

> "The dose makes the poison."

In other words, **the amount of a substance a person is exposed to** is as important as **how toxic the chemical might be**. For example, small doses of aspirin can be beneficial to people, but at very high doses, this common medicine can be deadly. In some individuals, even at very low doses, aspirin may be deadly.

Dose-response assessment involves considering the dose levels at which adverse effects were observed in test animals, and using these dose levels to calculate an equal dose in humans.

Step Three: Exposure Assessment

People can be exposed to pesticides in three ways:

1. Inhaling pesticides (inhalation exposure),
2. Absorbing pesticides through the skin (dermal exposure), and
3. Getting pesticides in their mouth or digestive tract (oral exposure).

Depending on the situation, pesticides could enter the body by any one or all of these routes. Typical sources of pesticide exposure include:

- **Food**
  Most of the foods we eat have been grown with the use of pesticides. Therefore, pesticide residues may be present inside or on the surfaces of these foods.

- **Home and Personal Use Pesticides**
  You might use pesticides in and around your home to control insects, weeds, mold, mildew, bacteria, lawn and garden pests and to protect your pets from pests such as fleas. Pesticides may also be used as insect repellants which are directly applied to the skin or clothing.

- **Pesticides in Drinking Water**
  Some pesticides that are applied to farmland or other land structures can make their way in small amounts to the ground water or surface water systems that feed drinking water supplies.

- **Worker Exposure to Pesticides**
  Pesticide applicators, vegetable and fruit pickers and others who work around pesticides can be exposed due to the nature of their jobs. To address the unique risks workers face from occupational exposure, EPA evaluates occupational exposure through a separate program. All pesticides registered by EPA have been shown to be safe when used properly.

Step Four: Risk Characterization

Risk characterization is the final step in assessing human health risks from pesticides. It is the process of combining the hazard, dose-response and exposure assessments to describe the overall risk from a pesticide. It explains the assumptions used in assessing exposure as well as the uncertainties that are built into the dose-response assessment. The strength of the overall database is considered, and broad

conclusions are made. EPA's role is to evaluate both toxicity and exposure and to determine the risk associated with use of the pesticide.

Simply put,

RISK = TOXICITY x EXPOSURE.

This means that the risk to human health from pesticide exposure depends on both the toxicity of the pesticide and the likelihood of people coming into contact with it. At least *some* exposure and *some* toxicity are required to result in a risk. For example, if the pesticide is very poisonous, but no people are exposed, there is no risk. Likewise, if there is ample exposure but the chemical is non-toxic, there is no risk. However, usually when pesticides are used, there is some toxicity and exposure, which results in a potential risk.

EPA recognizes that effects vary between animals of different species and from person to person. To account for this variability, *uncertainty factors* are built into the risk assessment. These uncertainty factors create an additional margin of safety for protecting people who may be exposed to the pesticides. FQPA requires EPA to use an extra 10-fold safety factor, if necessary, to protect infants and children from effects of the pesticide.

Types of Toxicity Tests EPA Requires for Human Health Risk Assessments

EPA evaluates studies conducted over different periods of time and that measure specific types of effects. These tests are evaluated to screen for potential health effects in infants, children and adults.

Acute Testing: Short-term exposure; a single exposure (dose).

- Oral, dermal (skin), and inhalation exposure
- Eye irritation
- Skin irritation
- Skin sensitization
- Neurotoxicity

Sub-chronic Testing: Intermediate exposure; repeated exposure over a longer period of time (i.e., 30-90 days).

- Oral, dermal (skin), and inhalation
- Neurotoxicity (nerve system damage)

Chronic Toxicity Testing: Long-term exposure; repeated exposure lasting for most of the test animal's life span. Intended to determine the effects of a pesticide after prolonged and repeated exposures.

- Chronic effects (non-cancer)
- Carcinogenicity (cancer)

Developmental and Reproductive Testing: Identify effects in the fetus of an exposed pregnant female (birth defects) and how pesticide exposure affects the ability of a test animal to successfully reproduce.

Mutagenicity Testing: Assess a pesticide's potential to affect the cell's genetic components.

Hormone Disruption: Measure effects for their potential to disrupt the endocrine system. The endocrine system consists of a set of glands and the hormones they produce that help guide the development, growth, reproduction, and behavior of animals including humans.

Risk Management

Once EPA completes the risk assessment process for a pesticide, we use this information to determine if (when used according to label directions), there is a reasonable certainty that the pesticide will not harm a person's health.

Using the conclusions of a risk assessment, EPA can then make a more informed decision regarding whether to approve a pesticide chemical or use, as proposed, or whether additional protective measures are necessary to limit occupational or non-occupational exposure to a pesticide. For example, EPA may prohibit a pesticide from being used on certain crops because consuming too much food treated with the pesticide may result in an unacceptable risk to consumers. Another example of protective measures is requiring workers to wear personal protective equipment (PPE) such as a respirator or chemical resistant gloves, or not allowing workers to enter treated crop fields until a specific period of time has passed.

If, after considering all appropriate risk reduction measures, the pesticide still does not meet EPA's safety standard, the Agency will not allow the proposed chemical or use. Regardless of the specific measures enforced, EPA's primary goal is to ensure that legal uses of the pesticide are protective of human health, especially the health of children, and the environment.

Human Health Risk Assessment and the Law

Federal law requires detailed evaluation of pesticides to protect human health and the environment. In 1996, Congress made significant changes to strengthen pesticide laws through the Food Quality Protection Act (FQPA). Many of these changes are key elements of the current risk assessment process. FQPA required that EPA consider:

- **A New Safety Standard**: FQPA strengthened the safety standard that pesticides must meet before being approved for use. EPA must ensure with a reasonable certainty that no harm will result from the legal uses of the pesticide.
- **Exposure from All Sources**: In evaluating a pesticide, EPA must estimate the combined risk from that pesticide from all non-occupational sources, such as:
  - Food Sources
  - Drinking Water Sources
  - Residential Sources
- **Cumulative Risk**: EPA is required to evaluate pesticides in light of similar toxic effects that different pesticides may share, or "a common mechanism of toxicity." At this time, EPA is developing a methodology for this type of assessment.
- **Special Sensitivity of Children to Pesticides**: EPA must ascertain whether there is an increased susceptibility from exposure to the pesticide to infants and children. EPA must build an additional 10-fold safety factor into risk assessments to ensure the protection of infants and children, unless it is determined that a lesser margin of safety will be safe for infants and children.

For More Information

If you would like more information about EPA's pesticide programs, contact the Communication Service Branch at (703) 305-5017 or visit the Pesticides Web site.

For more information on specific pesticides, or to inquire about the symptoms of pesticide poisoning, call the National Pesticide Information Center (NPIC), a toll-free hotline information at: 1-800-858-7378, or visit their Web site EXIT Disclaimer .

ATSDR
AGENCY FOR TOXIC SUBSTANCES AND DISEASE REGISTRY

CONTENTS

Highlights
What are polychlorinated biphenyls (PCBs)?
What happens to polychlorinated biphenyls (PCBs) when they enter the environment?
How might I be exposed to polychlorinated biphenyls (PCBs)?
How can polychlorinated biphenyls (PCBs) affect my health?
How likely are polychlorinated biphenyls (PCBs) to cause cancer?
How do polychlorinated biphenyls (PCBs) affect children?
How can families reduce the risk of exposure to polychlorinated biphenyls (PCBs)??
Is there a medical test to show whether I've been exposed to polychlorinated biphenyls (PCBs)?
Has the federal government made recommendations to protect human health?
References

February 2001

ToxFAQs™ for Polychlorinated Biphenyls (PCBs)

(Bifenilos Policlorados (BPCs))

This fact sheet answers the most frequently asked health questions about polychlorinated biphenyls (PCBs). For more information, you may call the ATSDR Information Center at 1-888-422-8737. This fact sheet is one in a series of summaries about hazardous substances and their health effects. This information is important because this substance may harm you. The effects of exposure to any hazardous substance depend on the dose, the duration, how you are exposed, personal traits and habits, and whether other chemicals are present.

HIGHLIGHTS: Polychlorinated biphenyls (PCBs) are a mixture of individual chemicals which are no longer produced in the United States, but are still found in the environment. Health effects that have been associated with exposure to PCBs include acne-like skin conditions in adults and neurobehavioral and immunological changes in children. PCBs are known to cause cancer in animals. PCBs have been found in at least 500 of the 1,598 National Priorities List sites identified by the Environmental Protection Agency (EPA).

What are polychlorinated biphenyls (PCBs)?

Polychlorinated biphenyls are mixtures of up to 209 individual chlorinated compounds (known as congeners). There are no known natural sources of PCBs. PCBs are either oily liquids or solids that are colorless to light yellow. Some PCBs can exist as a vapor in air. PCBs have no known smell or taste. Many commercial PCB mixtures are known in the U.S. by the trade name Aroclor.

PCBs have been used as coolants and lubricants in transformers, capacitors, and other electrical equipment because they don't burn easily and are good insulators. The manufacture of PCBs was stopped in the U.S. in 1977 because of evidence they build up in the environment and can cause harmful health effects. Products made before 1977 that may contain PCBs include old fluorescent lighting fixtures and electrical devices containing PCB capacitors,

Contact Information

RELATED RESOURCES

ToxFAQ™ 35k

ToxFAQ™ en Español 32k

Public Health Statement 125k

Public Health Statement en Español 321k

Toxicological Profile 13.6MB

A-Z INDEX

A B C
D E
F G H I
J K
L M N O P
Q R S
T U
V W X Y Z

ATSDR RESOURCES

ToxFAQs™

ToxFAQs™ en Español

Public Health Statements

Toxicological Profiles

Minimum Risk Levels

MMGs

MHMIs

Interaction Profiles

Priority List of Hazardous Substances

Division of Toxicology

and old microscope and hydraulic oils.

back to top

What happens to polychlorinated biphenyls (PCBs) when they enter the environment?

- PCBs entered the air, water, and soil during their manufacture, use, and disposal; from accidental spills and leaks during their transport; and from leaks or fires in products containing PCBs.
- PCBs can still be released to the environment from hazardous waste sites; illegal or improper disposal of industrial wastes and consumer products; leaks from old electrical transformers containing PCBs; and burning of some wastes in incinerators.
- PCBs do not readily break down in the environment and thus may remain there for very long periods of time. PCBs can travel long distances in the air and be deposited in areas far away from where they were released. In water, a small amount of PCBs may remain dissolved, but most stick to organic particles and bottom sediments. PCBs also bind strongly to soil.
- PCBs are taken up by small organisms and fish in water. They are also taken up by other animals that eat these aquatic animals as food. PCBs accumulate in fish and marine mammals, reaching levels that may be many thousands of times higher than in water.

back to top

How might I be exposed to polychlorinated biphenyls (PCBs)?

- Using old fluorescent lighting fixtures and electrical devices and appliances, such as television sets and refrigerators, that were made 30 or more years ago. These items may leak small amounts of PCBs into the air when they get hot during operation, and could be a source of skin exposure.
- Eating contaminated food. The main dietary sources of PCBs are fish (especially sportfish caught in contaminated lakes or rivers), meat, and dairy products.
- Breathing air near hazardous waste sites and drinking contaminated well water.
- In the workplace during repair and maintenance of PCB transformers; accidents, fires or spills involving transformers, fluorescent lights, and other old electrical devices; and disposal of PCB materials.

back to top

How can polychlorinated biphenyls (PCBs) affect my health?

The most commonly observed health effects in people exposed to large amounts of PCBs are skin conditions such as acne and rashes. Studies in exposed workers have shown changes in blood and urine that may indicate liver damage. PCB exposures in the general population are not likely to result in skin and liver effects. Most of the studies of health effects of PCBs in the general population examined children of mothers who were exposed to PCBs.

Animals that ate food containing large amounts of PCBs for short periods of time had mild liver damage and some died. Animals that ate smaller amounts of PCBs in food over several weeks or months developed various kinds of health effects, including anemia; acne-like skin conditions; and liver, stomach, and thyroid gland injuries. Other effects of PCBs in animals include changes in the immune system, behavioral alterations, and impaired reproduction. PCBs are not known to cause birth defects.

back to top

How likely are polychlorinated biphenyls (PCBs) to cause cancer?

Few studies of workers indicate that PCBs were associated with certain kinds of cancer in humans, such as cancer of the liver and biliary tract. Rats that ate food containing high levels of PCBs for two years developed liver cancer. The Department of Health and Human Services (DHHS) has concluded that PCBs may reasonably be anticipated to be carcinogens. The EPA and the International Agency for Research on Cancer (IARC) have determined that PCBs are probably carcinogenic to humans.

back to top

How do polychlorinated biphenyls (PCBs) affect children?

Women who were exposed to relatively high levels of PCBs in the workplace or ate large amounts of fish contaminated with PCBs had babies that weighed slightly less than babies from women who did not have these exposures. Babies born to women who ate PCB-contaminated fish also showed abnormal responses in tests of infant behavior. Some of these behaviors, such as problems with motor skills and a decrease in short-term memory, lasted for several years. Other studies suggest that the immune system was affected in children born to and nursed by mothers exposed to increased levels of PCBs. There are no reports of structural birth defects caused by exposure to PCBs or of health effects of PCBs in older children. The most likely way infants will be exposed to PCBs is from breast milk. Transplacental transfers of PCBs were also reported In most cases, the benefits of breast-feeding outweigh any risks from exposure to PCBs in mother's milk.

back to top

How can families reduce the risk of exposure to polychlorinated biphenyls (PCBs)?

- You and your children may be exposed to PCBs by eating fish or wildlife caught from contaminated locations. Certain states, Native American tribes, and U.S. territories have issued advisories to warn people about PCB-contaminated fish and fish-eating wildlife. You can reduce your family's exposure to PCBs by obeying these advisories.
- Children should be told not play with old appliances, electrical equipment, or transformers, since they may contain PCBs.
- Children should be discouraged from playing in the dirt near hazardous waste sites and in areas where there was a transformer fire. Children should also be discouraged from eating dirt and putting dirty hands, toys or other objects in their mouths, and should wash hands frequently.
- If you are exposed to PCBs in the workplace it is possible to carry them home on your clothes, body, or tools. If this is the case, you should shower and change clothing before leaving work, and your work clothes should be kept separate from other clothes and laundered separately.

back to top

Is there a medical test to show whether I've been exposed to polychlorinated biphenyls (PCBs)?

Tests exist to measure levels of PCBs in your blood, body fat, and breast milk, but these are not routinely conducted. Most people normally have low levels of PCBs in their body because nearly everyone has been environmentally exposed to PCBs. The tests can show if your PCB levels are elevated, which would indicate past exposure to above-normal levels of PCBs, but cannot determine when or how long you were exposed or whether you will develop health effects.

back to top

Has the federal government made recommendations to protect human health?

The EPA has set a limit of 0.0005 milligrams of PCBs per liter of drinking water (0.0005 mg/L). Discharges, spills or accidental releases of 1 pound or more of PCBs into the environment must be reported to the EPA. The Food and Drug Administration (FDA) requires that infant foods, eggs, milk and other dairy products, fish and shellfish, poultry and red meat contain no more than 0.2-3 parts of PCBs per million parts (0.2-3 ppm) of food. Many states have established fish and wildlife consumption advisories for PCBs.

back to top

References

Agency for Toxic Substances and Disease Registry (ATSDR). 2000. Toxicological Profile for polychlorinated biphenyls (PCBs). Atlanta, GA: U.S. Department of Health and Human Services, Public Health Service.

back to top

Where can I get more information?

ATSDR can tell you where to find occupational and environmental health clinics. Their specialists can recognize, evaluate, and treat illnesses resulting from exposure to hazardous substances. You can also contact your community or state health or environmental quality department if you have any more questions or concerns.

For more information, contact:

Agency for Toxic Substances and Disease Registry
Division of Toxicology
1600 Clifton Road NE, Mailstop F-32
Atlanta, GA 30333
Phone: 1-888-42-ATSDR (1-888-422-8737)
FAX: (770)-488-4178
Email: ATSDRIC@cdc.gov

back to top

ATSDR Department of Health and Human Services
Agency for Toxic Substances & Disease Registry

Home › CERCLA 2007 CERCLA Substance List

2007 CERCLA Priority List of Hazardous Substances

2007 RANK	SUBSTANCE NAME	TOTAL POINTS	2005 RANK	CAS #
1	ARSENIC	1672.58	1	007440-38-2
2	LEAD	1534.07	2	007439-92-1
3	MERCURY	1504.69	3	007439-97-6
4	VINYL CHLORIDE	1387.75	4	000075-01-4
5	POLYCHLORINATED BIPHENYLS	1365.78	5	001336-36-3
6	BENZENE	1355.96	6	000071-43-2
7	CADMIUM	1324.22	8	007440-43-9
8	POLYCYCLIC AROMATIC HYDROCARBONS	1316.98	7	130498-29-2
9	BENZO(A)PYRENE	1312.45	9	000050-32-8
10	BENZO(B)FLUORANTHENE	1266.55	10	000205-99-2
11	CHLOROFORM	1223.03	11	000067-66-3
12	DDT, P,P'-	1193.36	12	000050-29-3
13	AROCLOR 1254	1182.63	13	011097-69-1
14	AROCLOR 1260	1177.77	14	011096-82-5
15	DIBENZO(A,H)ANTHRACENE	1165.88	15	000053-70-3
16	TRICHLOROETHYLENE	1154.73	16	000079-01-6
17	DIELDRIN	1150.91	17	000060-57-1
18	CHROMIUM, HEXAVALENT	1149.98	18	018540-29-9
19	PHOSPHORUS, WHITE	1144.77	19	007723-14-0
20	CHLORDANE	1133.21	21	000057-74-9
21	DDE, P,P'-	1132.49	20	000072-55-9
22	HEXACHLOROBUTADIENE	1129.63	22	000087-68-3
23	COAL TAR CREOSOTE	1124.32	23	008001-58-9
24	ALDRIN	1117.22	25	000309-00-2
25	DDD, P,P'-	1114.83	24	000072-54-8
26	BENZIDINE	1114.24	26	000092-87-5
27	AROCLOR 1248	1112.20	27	012672-29-6
28	CYANIDE	1099.48	28	000057-12-5
29	AROCLOR 1242	1093.14	29	053469-21-9
30	AROCLOR	1091.52	62	012767-79-2
31	TOXAPHENE	1086.65	30	008001-35-2
32	HEXACHLOROCYCLOHEXANE, GAMMA-	1081.63	32	000058-89-9
33	TETRACHLOROETHYLENE	1080.43	31	000127-18-4
34	HEPTACHLOR	1072.67	33	000076-44-8
35	1,2-DIBROMOETHANE	1064.06	34	000106-93-4
36	HEXACHLOROCYCLOHEXANE, BETA-	1060.22	37	000319-85-7
37	ACROLEIN	1059.07	36	000107-02-8
38	DISULFOTON	1058.85	35	000298-04-4
39	BENZO(A)ANTHRACENE	1057.96	38	000056-55-3
40	3,3'-DICHLOROBENZIDINE	1051.61	39	000091-94-1

41	ENDRIN	1048.57	41	000072-20-8
42	BERYLLIUM	1046.12	40	007440-41-7
43	HEXACHLOROCYCLOHEXANE, DELTA-	1038.27	42	000319-86-8
44	1,2-DIBROMO-3-CHLOROPROPANE	1035.55	43	000096-12-8
45	PENTACHLOROPHENOL	1028.01	45	000087-86-5
46	HEPTACHLOR EPOXIDE	1027.12	44	001024-57-3
47	CARBON TETRACHLORIDE	1023.32	46	000056-23-5
48	AROCLOR 1221	1018.41	47	011104-28-2
49	COBALT	1015.57	50	007440-48-4
50	DDT, O,P'-	1014.71	49	000789-02-6
51	AROCLOR 1016	1014.33	48	012674-11-2
52	DI-N-BUTYL PHTHALATE	1007.49	52	000084-74-2
53	NICKEL	1005.40	55	007440-02-0
54	ENDOSULFAN	1004.65	54	000115-29-7
55	ENDOSULFAN SULFATE	1003.56	53	001031-07-8
56	DIAZINON	1002.08	57	000333-41-5
57	ENDOSULFAN, ALPHA	1001.30	58	000959-98-8
58	XYLENES, TOTAL	996.07	59	001330-20-7
59	CIS-CHLORDANE	995.08	51	005103-71-9
60	DIBROMOCHLOROPROPANE	994.87	60	067708-83-2
61	METHOXYCHLOR	994.47	61	000072-43-5
62	BENZO(K)FLUORANTHENE	981.26	63	000207-08-9
63	ENDRIN KETONE	978.99	64	053494-70-5
64	TRANS-CHLORDANE	973.99	56	005103-74-2
65	CHROMIUM(VI) OXIDE	969.58	66	001333-82-0
66	METHANE	959.78	67	000074-82-8
67	ENDOSULFAN, BETA	959.19	65	033213-65-9
68	AROCLOR 1232	955.64	68	011141-16-5
69	ENDRIN ALDEHYDE	954.86	69	007421-93-4
70	BENZOFLUORANTHENE	951.48	70	056832-73-6
71	TOLUENE	947.50	71	000108-88-3
72	2-HEXANONE	942.02	72	000591-78-6
73	2,3,7,8-TETRACHLORODIBENZO-P-DIOXIN	938.11	73	001746-01-6
74	ZINC	932.89	74	007440-66-6
75	DIMETHYLARSINIC ACID	922.06	75	000075-60-5
76	DI(2-ETHYLHEXYL)PHTHALATE	919.02	76	000117-81-7
77	CHROMIUM	908.52	77	007440-47-3
78	NAPHTHALENE	896.67	78	000091-20-3
79	1,1-DICHLOROETHENE	891.19	79	000075-35-4
80	METHYLENE CHLORIDE	888.96	81	000075-09-2
81	AROCLOR 1240	888.11	80	071328-89-7
82	2,4,6-TRINITROTOLUENE	883.59	82	000118-96-7
83	BROMODICHLOROETHANE	870.00	83	000683-53-4
84	HYDRAZINE	864.41	85	000302-01-2
85	1,2-DICHLOROETHANE	863.99	84	000107-06-2
86	2,4,6-TRICHLOROPHENOL	863.71	86	000088-06-2
87	2,4-DINITROPHENOL	860.45	87	000051-28-5
88	BIS(2-CHLOROETHYL) ETHER	859.88	88	000111-44-4
89	THIOCYANATE	849.21	89	000302-04-5
90	ASBESTOS	841.54	90	001332-21-4
91	CHLORINE	840.37	92	007782-50-5
92	CYCLOTRIMETHYLENETRINITRAMINE (RDX)	840.28	91	000121-82-4
93	HEXACHLOROBENZENE	838.34	93	000118-74-1

94	2,4-DINITROTOLUENE	837.88	96	000121-14-2
95	RADIUM-226	835.93	94	013982-63-3
96	ETHION	834.03	97	000563-12-2
97	1,1,1-TRICHLOROETHANE	833.81	95	000071-55-6
98	URANIUM	833.41	98	007440-61-1
99	ETHYLBENZENE	832.13	99	000100-41-4
100	RADIUM	828.07	100	007440-14-4
101	THORIUM	825.17	101	007440-29-1
102	4,6-DINITRO-O-CRESOL	822.78	102	000534-52-1
103	1,3,5-TRINITROBENZENE	820.17	103	000099-35-4
104	CHLOROBENZENE	819.69	105	000108-90-7
105	RADON	817.89	104	010043-92-2
106	RADIUM-228	816.76	106	015262-20-1
107	THORIUM-230	814.72	107	014269-63-7
107	URANIUM-235	814.72	107	015117-96-1
109	BARIUM	813.46	109	007440-39-3
110	FLUORANTHENE	812.40	113	000206-44-0
111	URANIUM-234	812.11	110	013966-29-5
112	N-NITROSODI-N-PROPYLAMINE	811.05	111	000621-64-7
113	THORIUM-228	810.36	112	014274-82-9
114	RADON-222	809.78	114	014859-67-7
115	HEXACHLOROCYCLOHEXANE, ALPHA-	809.56	116	000319-84-6
116	1,2,3-TRICHLOROBENZENE	808.41	143	000087-61-6
117	MANGANESE	807.90	115	007439-96-5
118	COAL TARS	807.07	117	008007-45-2
119	CHRYSOTILE ASBESTOS	806.68	119	012001-29-5
119	STRONTIUM-90	806.68	119	010098-97-2
121	PLUTONIUM-239	806.67	118	015117-48-3
122	POLONIUM-210	806.39	122	013981-52-7
123	METHYLMERCURY	806.39	121	022967-92-6
124	PLUTONIUM-238	806.01	123	013981-16-3
125	LEAD-210	805.90	124	014255-04-0
126	PLUTONIUM	805.23	125	007440-07-5
127	CHLORPYRIFOS	804.93	125	002921-88-2
128	COPPER	804.86	133	007440-50-8
129	AMERICIUM-241	804.55	128	086954-36-1
130	RADON-220	804.54	127	022481-48-7
131	AMOSITE ASBESTOS	804.07	129	012172-73-5
132	IODINE-131	803.48	130	010043-66-0
133	HYDROGEN CYANIDE	803.08	132	000074-90-8
134	TRIBUTYLTIN	802.61	131	000688-73-3
135	GUTHION	802.32	134	000086-50-0
136	NEPTUNIUM-237	802.13	135	013994-20-2
137	CHRYSENE	802.10	139	000218-01-9
138	CHLORDECONE	801.64	136	000143-50-0
138	IODINE-129	801.64	136	015046-84-1
138	PLUTONIUM-240	801.64	136	014119-33-6
141	S,S,S-TRIBUTYL PHOSPHOROTRITHIOATE	797.88	140	000078-48-8
142	BROMINE	789.15	142	007726-95-6
143	POLYBROMINATED BIPHENYLS	789.11	141	067774-32-7
144	DICOFOL	787.56	144	000115-32-2
145	PARATHION	784.14	145	000056-38-2
146	1,1,2,2-TETRACHLOROETHANE	782.15	146	000079-34-5

147	SELENIUM	778.98	147	007782-49-2	
148	HEXACHLOROCYCLOHEXANE, TECHNICAL GRADE	774.91	148	000608-73-1	
149	TRICHLOROFLUOROETHANE	770.74	149	027154-33-2	
150	TRIFLURALIN	770.12	150	001582-09-8	
151	DDD, O,P'-	768.73	151	000053-19-0	
152	4,4'-METHYLENEBIS(2-CHLOROANILINE)	766.66	152	000101-14-4	
153	HEXACHLORODIBENZO-P-DIOXIN	760.42	153	034465-46-8	
154	HEPTACHLORODIBENZO-P-DIOXIN	754.47	154	037871-00-4	
155	PENTACHLOROBENZENE	753.58	155	000608-93-5	
156	1,3-BUTADIENE	747.31	201	000106-99-0	
157	AMMONIA	745.55	156	007664-41-7	
158	2-METHYLNAPHTHALENE	743.24	157	000091-57-6	
159	1,4-DICHLOROBENZENE	737.32	159	000106-46-7	
160	1,1-DICHLOROETHANE	736.23	158	000075-34-3	
161	ACENAPHTHENE	731.25	160	000083-32-9	
162	1,2,3,4,6,7,8,9-OCTACHLORODIBENZOFURAN	726.14	161	039001-02-0	
163	1,1,2-TRICHLOROETHANE	724.96	162	000079-00-5	
164	TRICHLOROETHANE	723.32	163	025323-89-1	
165	HEXACHLOROCYCLOPENTADIENE	719.01	164	000077-47-4	
166	HEPTACHLORODIBENZOFURAN	718.58	165	038998-75-3	
167	1,2-DIPHENYLHYDRAZINE	713.90	166	000122-66-7	
168	2,3,4,7,8-PENTACHLORODIBENZOFURAN	710.71	167	057117-31-4	
169	TETRACHLOROBIPHENYL	709.21	168	026914-33-0	
170	CRESOL, PARA-	707.83	169	000106-44-5	
171	OXYCHLORDANE	706.32	170	027304-13-8	
172	1,2-DICHLOROBENZENE	704.91	171	000095-50-1	
173	1,2-DICHLOROETHENE, TRANS-	704.04	178	000156-60-5	
174	INDENO(1,2,3-CD)PYRENE	703.30	180	000193-39-5	
175	GAMMA-CHLORDENE	702.59	172	056641-38-4	
176	CARBON DISULFIDE	702.55	174	000075-15-0	
177	TETRACHLOROPHENOL	702.54	173	025167-83-3	
178	AMERICIUM	701.62	175	007440-35-9	
178	URANIUM-233	701.62	175	013968-55-3	
180	PALLADIUM	700.66	177	007440-05-3	
181	HEXACHLORODIBENZOFURAN	700.56	179	055684-94-1	
182	PHENOL	696.96	183	000108-95-2	
183	CHLOROETHANE	693.90	182	000075-00-3	
184	ACETONE	693.31	181	000067-64-1	
185	P-XYLENE	690.20	185	000106-42-3	
186	DIBENZOFURAN	689.19	187	000132-64-9	
187	ALUMINUM	688.13	186	007429-90-5	
188	2,4-DIMETHYLPHENOL	685.76	189	000105-67-9	
189	CARBON MONOXIDE	684.49	188	000630-08-0	
190	TETRACHLOROETHANE	677.97	190	025322-20-7	
191	HYDROGEN SULFIDE	676.51	193	007783-06-4	
192	PENTACHLORODIBENZOFURAN	673.21	192	030402-15-4	
193	CHLOROMETHANE	670.19	191	000074-87-3	
194	BIS(2-METHOXYETHYL) PHTHALATE	666.08	194	034006-76-3	
195	BUTYL BENZYL PHTHALATE	659.38	195	000085-68-7	
196	CRESOL, ORTHO-	658.66	196	000095-48-7	
197	HEXACHLOROETHANE	653.10	199	000067-72-1	
198	VANADIUM	651.70	198	007440-62-2	

199	N-NITROSODIMETHYLAMINE	650.71	200	000062-75-9
200	1,2,4-TRICHLOROBENZENE	647.30	203	000120-82-1
201	BROMOFORM	643.53	202	000075-25-2
202	TETRACHLORODIBENZO-P-DIOXIN	635.74	204	041903-57-5
203	1,3-DICHLOROBENZENE	631.41	205	000541-73-1
204	PENTACHLORODIBENZO-P-DIOXIN	625.12	207	036088-22-9
205	N-NITROSODIPHENYLAMINE	624.79	208	000086-30-6
206	1,2-DICHLOROETHYLENE	622.49	206	000540-59-0
207	2,3,7,8-TETRACHLORODIBENZOFURAN	622.15	210	051207-31-9
208	2-BUTANONE	620.01	209	000078-93-3
209	2,4-DICHLOROPHENOL	616.45	212	000120-83-2
210	1,4-DIOXANE	616.29	215	000123-91-1
211	FLUORINE	613.28	214	007782-41-4
212	NITRITE	612.64	216	014797-65-0
213	CESIUM-137	612.50	217	010045-97-3
214	SILVER	612.19	213	007440-22-4
215	CHROMIUM TRIOXIDE	610.85	218	007738-94-5
216	NITRATE	610.66	219	014797-55-8
217	POTASSIUM-40	608.91	220	013966-00-2
218	DINITROTOLUENE	607.65	221	025321-14-6
219	ANTIMONY	605.37	222	007440-36-0
220	COAL TAR PITCH	605.33	224	065996-93-2
221	THORIUM-227	605.32	223	015623-47-9
222	2,4,5-TRICHLOROPHENOL	604.83	225	000095-95-4
223	ARSENIC ACID	604.45	226	007778-39-4
224	ARSENIC TRIOXIDE	604.36	227	001327-53-3
225	PHORATE	603.10	228	000298-02-2
226	BENZOPYRENE	603.00	230	073467-76-2
227	CRESOLS	602.74	229	001319-77-3
228	CHLORDANE, TECHNICAL	602.62	231	012789-03-6
229	DIMETHOATE	602.61	232	000060-51-5
230	ACTINIUM-227	602.57	233	014952-40-0
230	STROBANE	602.57	233	008001-50-1
232	4-AMINOBIPHENYL	602.51	235	000092-67-1
232	PYRETHRUM	602.51	235	008003-34-7
234	ARSINE	602.42	237	007784-42-1
235	NALED	602.32	238	000300-76-5
236	DIBENZOFURANS, CHLORINATED	602.13	239	042934-53-2
236	ETHOPROP	602.13	239	013194-48-4
238	ALPHA-CHLORDENE	601.94	241	056534-02-2
238	CARBOPHENOTHION	601.94	241	000786-19-6
240	DICHLORVOS	601.64	243	000062-73-7
241	CALCIUM ARSENATE	601.45	244	007778-44-1
241	MERCURIC CHLORIDE	601.45	244	007487-94-7
241	SODIUM ARSENITE	601.45	244	007784-46-5
244	FORMALDEHYDE	599.64	247	000050-00-0
245	2-CHLOROPHENOL	599.62	248	000095-57-8
246	PHENANTHRENE	597.68	249	000085-01-8
247	HYDROGEN FLUORIDE	588.03	250	007664-39-3
248	2,4-D ACID	584.47	251	000094-75-7
249	DIBROMOCHLOROMETHANE	580.59	252	000124-48-1
250	DIURON	579.16	253	000330-54-1
251	BUTYLATE	578.43	254	002008-41-5

252	DIMETHYL FORMAMIDE	578.23	255	000068-12-2
253	PYRENE	577.95	256	000129-00-0
254	DICHLOROBENZENE	577.70	211	025321-22-6
255	ETHYL ETHER	572.47	257	000060-29-7
256	DICHLOROETHANE	570.46	258	001300-21-6
257	4-NITROPHENOL	567.79	259	000100-02-7
258	1,3-DICHLOROPROPENE, CIS-	561.82	184	010061-01-5
259	PHOSPHINE	559.74	260	007803-51-2
260	TRICHLOROBENZENE	557.96	261	012002-48-1
261	2,6-DINITROTOLUENE	555.20	262	000606-20-2
262	FLUORIDE ION	549.64	263	016984-48-8
263	1,2,3,4,6,7,8-HEPTACHLORODIBENZO-P-DIOXIN	547.90	264	035822-46-9
264	METHYL PARATHION	545.83	265	000298-00-0
265	PENTAERYTHRITOL TETRANITRATE	545.59	266	000078-11-5
266	1,3-DICHLOROPROPENE, TRANS-	543.37	267	010061-02-6
267	BIS(2-ETHYLHEXYL)ADIPATE	540.20	268	000103-23-1
268	CARBAZOLE	534.52	269	000086-74-8
269	METHYL ISOBUTYL KETONE	533.24	271	000108-10-1
270	1,2-DICHLOROETHENE, CIS-	533.15	270	000156-59-2
271	STYRENE	532.70	272	000100-42-5
272	CARBARYL	530.98	273	000063-25-2
273	1,2,3,4,6,7,8-HEPTACHLORODIBENZOFURAN	529.45	274	067562-39-4
274	ACRYLONITRILE	528.28	275	000107-13-1
275	1-METHYLNAPHTHALENE	526.51	NEW	

Substances were assigned the same rank when two (or more) substances received equivalent total point scores.

CAS #= Chemical Abstracts Service Registry Number

This page was updated on 01/10/2008

Appendix 6

Manufacturer Specifications for Vapor Barrier

Preprufe® 300R & 160R
Pre-applied waterproofing membranes that bond integrally to poured concrete for use below slabs or behind basement walls on confined sites

040-013-1535

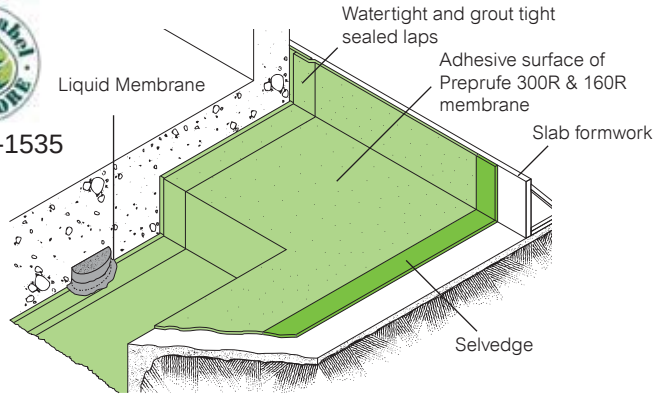

Advantages
- Forms a unique integral seal to concrete poured against it. This prevents water migration and makes it unaffected by ground settlement beneath slabs.
- Fully-adhered watertight laps and detailing
- Provides a barrier to water, moisture and gas – physically isolates the structure from the surrounding ground.
- BBA Certified for basement Grades 2, 3, & 4 to BS 8102:1990
- Zero permeance to moisture
- Solar reflective - reduced temperature gain
- Simple and quick to install, requiring no priming or fillets.
- Can be applied to permanent formwork - allows maximum use of confined sites.
- Self protecting - can be trafficked immediately after application and ready for immediate placing of reinforcement.
- Unaffected by wet conditions - cannot activate prematurely.
- Inherently waterproof, non-reactive system:
  - not reliant on confining pressures or hydration
  - unaffected by freeze/thaw, wet/dry cycling
- Chemically resistant, effective in all types of soils and waters - protects structure from salt or sulphate attack.

Description
Preprufe® 300R & 160R membranes are unique composite sheets comprising a thick HDPE film, an aggressive pressure sensitive adhesive and a weather resistant protective coating.
Unlike conventional non-adhering membranes, which are vulnerable to water ingress tracking between the unbonded membrane and structure, the unique Preprufe seal to concrete prevents any ingress or migration of water around the structure.

The Preprufe R System includes:
- Preprufe 300R - heavy-duty grade for use below slabs and on rafts (i.e. mud slabs). Designed to accept the placing of heavy reinforcement using conventional concrete spacers.
- Preprufe 160R - thinner grade for lighter applications and reverse tanking (i.e. blindside zero property line) applications against permanent formwork such as soil retention systems.
- Preprufe Tape LT - for covering cut edges, roll ends, penetrations and detailing (temperatures between -4°C and +30°C).
- Preprufe Tape HC - as above for use in Hot Climates (minimum10°C).
- Liquid Membrane - for sealing around penetrations, etc.

Preprufe 300R & 160R membranes are applied either horizontally to smooth prepared concrete or well rolled and compacted sand or crushed stone blinding; or vertically to permanent formwork or adjoining structures. Concrete is then cast directly against the adhesive side of the membranes. The specially developed Preprufe adhesive layers work together to form a continuous and integral seal to the structure.

Preprufe can be returned up the inside face of slab formwork but is not recommended for conventional twin-sided formwork on walls, etc. Use Bituthene self-adhesive membrane or Procor fluid applied membrane to walls after removal of formwork for a fully bonded system to all structural surfaces.

BBA BRITISH BOARD OF AGREMENT
CERTIFICATE No.

Installation

Preprufe® 300R & 160R membranes are supplied in rolls 1.2m wide, with a selvedge on one side to provide self-adhered laps for continuity between rolls. The rolls of Preprufe membrane and Preprufe Tape are interwound with a disposable plastic release liner which must be removed before placing reinforcement and concrete.

Substrate Preparation

All Surfaces - It is essential to create a sound and solid substrate to eliminate movement during the concrete pour. Substrates must be regular and smooth with no gaps or voids greater than 12 mm. Grout around all penetrations such as utility conduits, etc. for stability.

Horizontal Blinding - Monolithic concrete blinding or mud slab is preferred. The blinding must be free of loose aggregate and sharp protrusions. An angular profiled blinding is recommended rather than a sloping or rounded substrate. The surface does not need to be dry, but standing water must be removed.

Vertical Sheet Piling - Use concrete, plywood, insulation or other approved facing to sheet piling to provide support to the membrane. Board systems such as timber lagging must be close butted to provide support and not more than 12 mm out of alignment.

Membrane Installation

Preprufe can be applied at temperatures of -4ºC or above. During cold or damp conditions, the selvedge and tape adhesive can be gently warmed using a hot air gun or similar to remove moisture or condensation and improve initial adhesion.

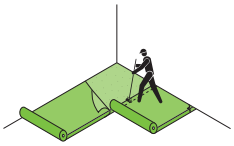

Horizontal Substrates - Place the membrane HDPE film side to the substrate with printed coated side up facing towards the concrete pour. End laps should be staggered to avoid a build up of layers. Leave plastic release liner in position until overlap procedure is completed. Accurately position succeeding sheets to overlap the previous sheet 75 mm along the marked selvedge. Ensure the underside of the succeeding sheet is clean, dry and free from contamination before attempting to overlap. Peel back the plastic release liner from between the overlaps as the two layers are bonded together. Ensure a continuous bond is achieved without creases and roll firmly with a heavy roller. Completely remove the plastic liner to expose the protective coating. Any initial tack will quickly disappear.

Vertical Substrates - Mechanically fasten the membrane vertically using fixings (i.e. fasteners) appropriate to the substrate with the printed coated side facing towards the concrete pour. The membrane may be installed in any convenient length. Secure the top of the membrane using a batten such as a termination bar or fixing 50 mm below the top edge. Fixings can be made through the selvedge so that the membrane lays flat and allows firmly rolled overlaps. Immediately remove the plastic release liner. Any additional fixings must be covered with a patch of Preprufe Tape. Ensure the underside of the succeeding sheet is clean, dry and free from contamination before attempting to overlap. Roll firmly to ensure a watertight seal. Roll Ends and Cut Edges - Overlap all roll ends and cut edges by a minimum 75 mm and ensure the area is clean and free from contamination, wiping with a damp cloth if necessary. Allow to dry and apply Preprufe Tape LT (or HC in hot climates) centered over the lap and roll firmly. Immediately remove printed plastic release liner from the tape.

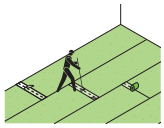

Penetrations

Use the following steps to seal around penetrations such as service pipes, piles, lightning conductors, etc.
Grout around the penetration if the penetration is not stable. Scribe membrane tight to the penetration. If the membrane is not within 12mm of the penetration, apply Preprufe Tape to

Corners

Internal and external corners should be formed as shown in the diagrams returning the membrane a minimum of 100mm and sealing with Preprufe Tape. Ensure that the apex of the corner is covered and sealed with tape and roll firmly. Crease and fold the membrane to ensure a close fit to the substrate profile and avoid hollows.

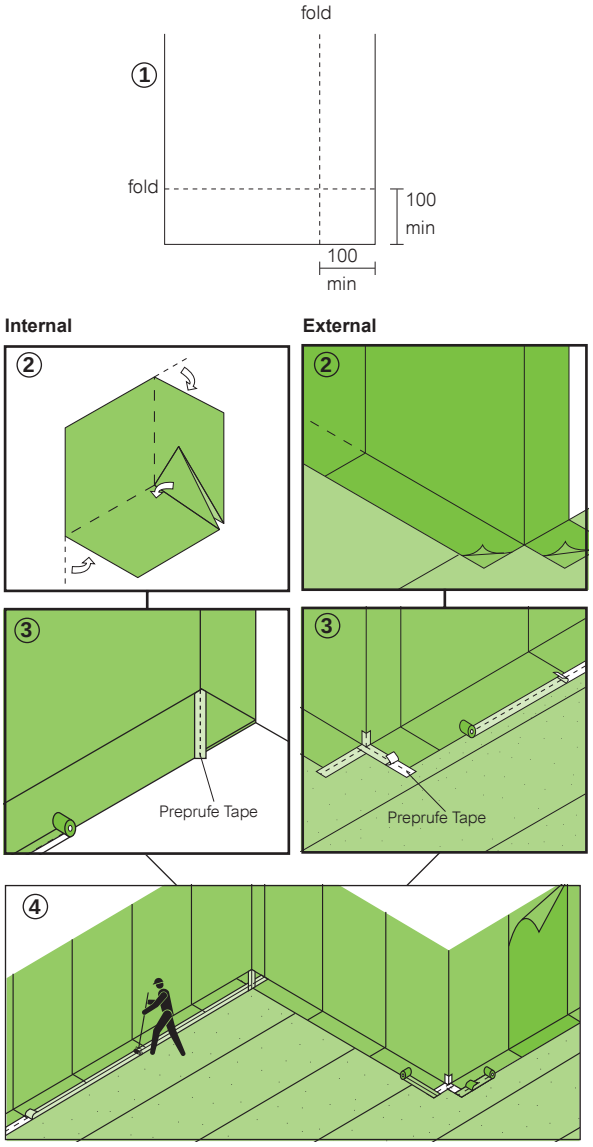

cover the gap. Wrap the penetration with Preprufe Tape by positioning the tape 12 mm above the membrane.
Mix and apply Bituthene Liquid Membrane around the penetrations using a fillet to provide a watertight seal between the Preprufe membrane and Preprufe Tape.

Membrane Repair

Inspect the membrane before installation of reinforcement steel, formwork and final placement of concrete. The membrane can be easily cleaned by jet washing if required. Repair damage by wiping the area with a damp cloth to ensure the area is clean and free from dust, and allow to dry. Apply Preprufe Tape centered over the damaged area and roll firmly. Any areas of damaged adhesive should be covered with Preprufe Tape. Remove printed plastic release liner from tape. Where exposed selvedge has lost adhesion or laps have not been sealed, ensure the area is clean and dry and cover with fresh Preprufe Tape, rolling firmly. Alternatively, use a hot air gun or similar to activate adhesive and firmly roll lap to achieve continuity.

Pouring of Concrete

Ensure the plastic release liner is removed from all areas of Preprufe R membrane and Tape. It is recommended that concrete be poured within 56 days (42 days in hot climates) of application of the membrane. Concrete must be placed and compacted carefully to avoid damage to the membrane. Never use a sharp object to consolidate the concrete.

Wall base detail

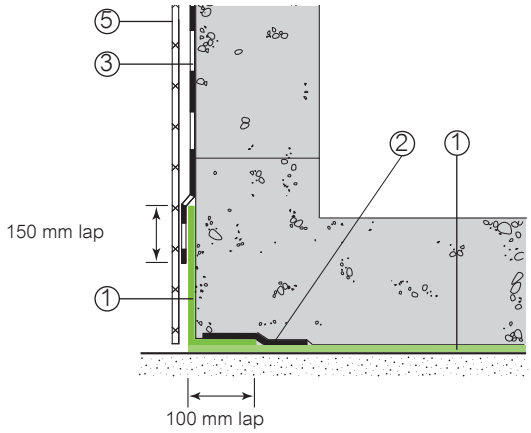

Alternative wall base detail for early shutter removal

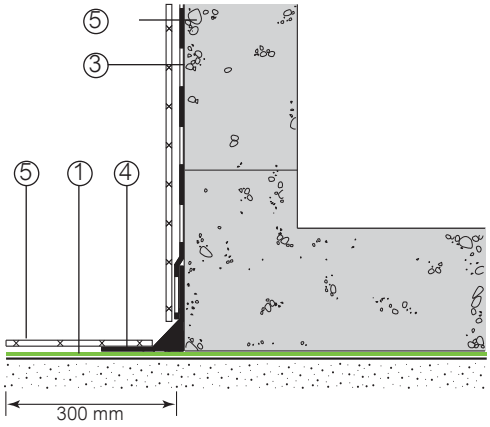

Wall base with toe detail showing drainage option

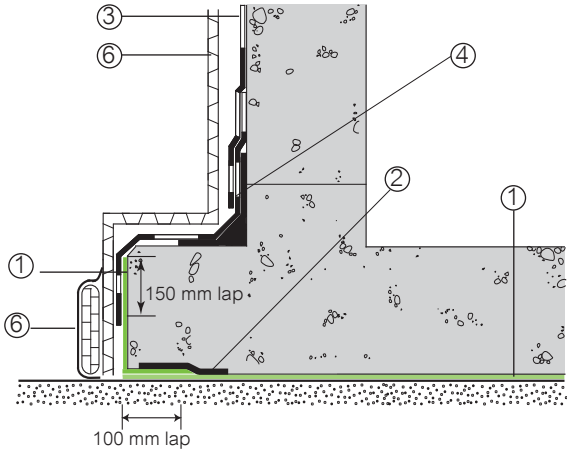

Wall base detail against permanent shutter

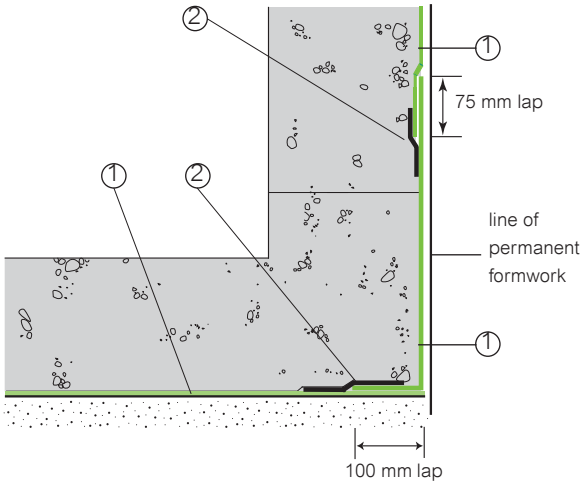

Pipe penetration

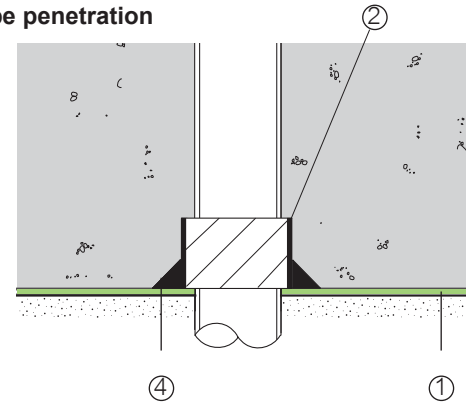

Pile detail

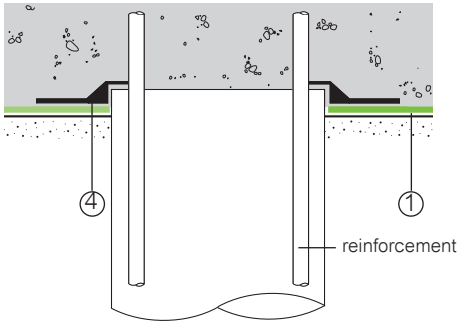

1	Preprufe	3	Bituthene® or Procor®	5	Protection
2	Preprufe Tape	4	Liquid Membrane	6	Hydroduct®

Details shown are typical illustrations and not working details. For assistance with detailing and problem solving please contact Grace Technical Department.

Physical Properties

Property	Typical Value		Test Method
	300R	160R	
Colour	White		
Thickness*	1.2 mm	0.8 mm	ASTM D3767
Peel Adhesion to Concrete	880 N/m		ASTM D903 modified
Resistance to Hydrostatic Head	>70 m		ASTM D5385 modified
Low Temperature Flexibility	<-23°C		ASTM D1970
Puncture Resistance	990 N	445 N	ASTM E 154
Elongation	300% minimum		ASTM D412 modified
Tensile Strength, Film	27.6 Mpa		ASTM D412
Crack Cycling @ -23°C	Pass		ASTM C 836

Typical test values represent average values from samples tested. Test methods noted may be modified.
* Nominal thickness refers to the thickness of the membrane without release liner.

Supply

Preprufe	300R	160R	Tape LT or HC*
Thickness (nominal)	1.2 mm	0.8 mm	-
Roll size	1.2x30.0 m	1.2x35.0 m	100 mmx15.0 m
Roll area	36.0 m^2	42 m^2	-
Roll weight	50 kg	42 kg	2 kg
Min. edge/end laps	75 mm	75 mm	75 mm

* LT denotes Low Temperature (between -4˚C and +30˚C)
HC denotes Hot Climates (>+10˚C)

Ancillary Products
Liquid Membrane, 5.7 litre

Removal of Formwork

Preprufe membranes can be applied to removable formwork, such as slab perimeters, elevator and lift pits, etc. Once the concrete is poured the formwork must remain in place until the concrete has gained sufficient compressive strength to develop the surface bond. Preprufe membranes are not recommended for conventional twin-sided wall forming systems.

A minimum concrete compressive strength of 10 N/mm^2 (1500 psi) is recommended prior to stripping formwork supporting Preprufe membranes. Premature stripping may result in displacement of the membrane and/or spalling of the concrete.

As a guide, to reach the minimum compressive strength stated above, a structural concrete mix with an ultimate strength of 40 N/mm^2 (6000 psi) will typically require a cure time of approximately 6 days at an average ambient temperature of 4ºC, or 2 days at 21ºC.

Specification Clauses

Preprufe 300R or 160R shall be applied with its adhesive face presented to receive fresh concrete to which it will integrally bond. Only Grace Construction Products approved membranes shall be bonded to Preprufe 300R &160R. All Preprufe 300R &160R system materials shall be supplied by Grace Construction Products, and applied strictly in accordance with their instructions. Specimen performance and formatted clauses are also available.

Health and Safety

Refer to relevant Material Safety data sheet. Complete rolls should be handled by a minimum of two persons.

Grace Technical Services

For assistance with working drawings for projects and additional technical advice, please contact Grace Technical Services.

www.grace.com/construction

Australia 1800 855 525 New Zealand (64-9) 448 1146 China Mainland (86-21) 3158 2888
Hong Kong (852) 2675 7898 India (91-124) 402 8972 Indonesia (62-21) 893 4260 Japan (81-3) 3537 6366
Korea (82-32) 820 0800 Malaysia (60-3) 9074 6133 Philippines (63-49) 549 7373 Singapore (65) 6265 3033
Thailand (66-2) 709 4470 Vietnam (84-8) 3710 6168

Bituthene, Hydroduct, Preprufe and Procor are registered trademarks of W. R. Grace & Co.-Conn.

The information given is based on data and knowledge considered to be true and accurate and is offered for the user's consideration, investigation and verification. Since the conditions of use are beyond our control we do not warrant the results to be obtained. Please read all statements, recommendations or suggestions in conjunction with our conditions of sale including those limiting warranties and remedies which apply to all goods supplied by us. No statement, recommendation or suggestion is intended for any use which would violate or infringe statutory obligations or any rights belonging to a third party.

These products may be covered by patents or patents pending. Copyright 2014. W. R. Grace (S) Pte Ltd 110-BIT-5F
Printed in Singapore 10/14

GRACE

APPENDIX 7

LETTER OF PROPOSED DEVELOPMENT FROM REGISTERED ARCHITECT

MICHAEL
MUROFF
ARCHITECT LLC

August 25, 2015
Office of the Mayor
Office of Environmental Remediation
E-Designation Program
100 Gold Street, 2nd Floor
New York, NY 10038

Re: 221-227 East 138th Street Bronx, NY
Block: 2340 Lots: 56, 58
OER#: 16EHAZ014X

Dear Sir or Madam:

Michael Muroff Architect LLC is the Architect for the proposed new building at 221-227 East 138th Street in the Bronx, NY.

The lot is 100' x 100' with three frontages on Canal Place (west), 138th Street (south), and Rider Avenue (east). The neighboring lot contains a high one story building along the entire length of the northern lot line. The proposed building footprint will be 70' x 100' with a 30' rear yard and a full lot cellar.

The proposed project is approximately 50,000 sf in net zoning area and 10 stories in height. The 10,000 sf cellar will contain parking, residential storage, compactor room, and a stormwater detention tank. The ground floor will have 3,500 sf of commercial, a 400 sf residential lobby, parking, mechanical rooms, and a 30' rear yard which will be concrete on metal deck. There will be two commercial units, one approximately 2,800 sf and a second of approximately 700 sf; both will be retail.

Floors 2-10 will contain a total of 47 residential units. The tenth story will also have a recreation space and an outdoor patio. On the roof there will be stair and elevator bulkheads, as well as some limited mechanical equipment. Residential units will be a mixture of rental, condo, and affordable housing. Cooking, heating, cooling, and domestic hot water will be powered by natural gas.

Michael Muroff Architect LLC
muroffarch.com
333 Hudson Street Suite 501
New York, NY 10013
P: 646 230-7111
F: 646 230 7277

MICHAEL
MUROFF
ARCHITECT LLC

The primary structural system will be steel, with concrete on metal deck. The foundation will be a mat slab. The site slopes from a maximum of 12.87' to a minimum of 8.98' relative to the NAVD88 datum. First floor elevations will vary in order to meet grade at 4 separate entrances for residential, commercial, and parking areas. The proposed top of slab of the cellar is at 1.5' relative to NAVD88 datum, with an approximate 10' floor-floor height, 3'-3" thick mat slab with a 20 mil vapor barrier over 6" of compacted crushed stone. The elevator pit will be approximately 100 square feet and located in the center of the building. The bottom of slab in the elevator pit will be @ 7' below cellar top of slab. We approximate that the volume of soil to be excavated will be in the range of 5,120 cubic yards. There is no backfill material proposed.

Please feel free to contact our office should you have any questions.

Very truly yours,

REGISTERED ARCHITECT
MICHAEL MUROFF
No. 038011
STATE OF NEW YORK

Michael Muroff RA, AIA, LEED AP

Michael Muroff Architect LLC
muroffarch.com

333 Hudson Street Suite 501
New York, NY 10013

P: 646 230-7111
F: 646 230 7277